Level

244LD LevelStar Intelligent Buoyancy Transmitter for Level, Interface and Density – HART® and FOUNDATION Fieldbus

PSS EML0710

Product Specification

Revised July 2024

https://www.se.com

Legal Information

The information provided in this document contains general descriptions, technical characteristics and/or recommendations related to products/solutions.

This document is not intended as a substitute for a detailed study or operational and site-specific development or schematic plan. It is not to be used for determining suitability or reliability of the products/solutions for specific user applications. It is the duty of any such user to perform or have any professional expert of its choice (integrator, specifier or the like) perform the appropriate and comprehensive risk analysis, evaluation and testing of the products/solutions with respect to the relevant specific application or use thereof.

The Schneider Electric brand and any trademarks of Schneider Electric SE and its subsidiaries referred to in this document are the property of Schneider Electric SE or its subsidiaries. All other brands may be trademarks of their respective owner.

This document and its content are protected under applicable copyright laws and provided for informative use only. No part of this document may be reproduced or transmitted in any form or by any means (electronic, mechanical, photocopying, recording, or otherwise), for any purpose, without the prior written permission of Schneider Electric.

Schneider Electric does not grant any right or license for commercial use of the document or its content, except for a non-exclusive and personal license to consult it on an "as is" basis.

Schneider Electric reserves the right to make changes or updates with respect to or in the content of this document or the format thereof, at any time without notice.

To the extent permitted by applicable law, no responsibility or liability is assumed by Schneider Electric and its subsidiaries for any errors or omissions in the informational content of this document, as well as any non-intended use or misuse of the content thereof.

Table of Contents

Important Safety Instructions 4
Introduction 5
Features 5
Supply via Power Supply Unit with Communication; Ex 7
Direct Supply with Communication; Not Ex 8
Connections and Operational Elements 9
Technical Data 10
Input/Output 10
Configuration 10
FOUNDATION Fieldbus H1 Communication 10
HART Communication 11
Operating Conditions 12
Operation Condition Effects 12
Transitional Behavior 13
Materials; Pressure Rating and Contact Face, Mounting Direction 13
Mounting 13
Weight 14
Electrical Connection 14
Electromagnetic Compatibility EMC 14
Safety Requirements 15
CE Compliance 15
Safety 15
244LD LevelStar Versions 16
Electrical Classification ATEX 17
Version with Heating Jacket 17
Comparison of Material 18
Service Limits of Wafer Body PN 250 made of (material) 18
Model Code 20
Displacer 204DE 25
Accessories 27
Model Code 204DE 28
Table of Versions 31
Dimensions 32

Important Safety Instructions

Read these instructions carefully and look at the equipment to become familiar with it before trying to install, operate, service, or maintain it. The following safety messages might appear throughout this manual or on the equipment to warn of potential hazards or to call attention to information that clarifies or simplifies a procedure.

The addition of this symbol to a “Danger” or “Warning” safety message indicates that an electrical hazard exists that results in personal injury if the instructions are not followed.

This safety alert symbol that lets you know about potential personal injury hazards. Obey all safety messages with this symbol to avoid possible injury or death.

⚠ DANGER

DANGER indicates a hazardous situation which, if not avoided, **will result in** death or serious injury.

Failure to follow these instructions will result in death or serious injury.

⚠ WARNING

WARNING indicates a hazardous situation that, if not avoided, **could result in** death or serious injury.

Failure to follow these instructions can result in death, serious injury, or equipment damage.

⚠ CAUTION

CAUTION indicates a hazardous situation that, if not avoided, **could result in** minor or moderate injury.

Failure to follow these instructions can result in injury or equipment damage.

NOTICE

NOTICE is used to address practices not related to physical injury.

Failure to follow these instructions can result in equipment damage.

Please Note

Electrical equipment should only be installed, operated, serviced, and maintained by qualified personnel. No responsibility is assumed by Schneider Electric for any consequences arising out of the use of this material.

A qualified person is one who has skills and knowledge related to the construction, installation, and operation of electrical equipment and has received safety training to recognize and avoid the hazards involved.

Introduction

The 244LD LevelStar intelligent transmitter continuously measures liquid level or liquid density in all industrial application processes. The measurement is based on the proven Archimedes buoyancy principle. Measured values can be transferred with analog or digital communication. Digital communication facilitates complete operation and configuration via PC or control system. Despite extreme temperatures, high process pressure. and corrosive liquids, the 244LD measures with consistent reliability and high precision. It is approved for installations in contact with explosive atmospheres.

For information about equipment handling, maintenance, and avoiding potential hazards, see *244LD LevelStar Intelligent Buoyancy Transmitter for Level, Interface and Density – HART® and FOUNDATION Fieldbus, Safety Operating Instructions*, (MI EML0010-Ex).

Features

- HART® Communication, 4 to 20 mA, or FOUNDATION Fieldbus
- Easy configuration using PACTware™ and DTM
- Multilingual full text graphic LCD
- IR communication as a standard
- Easy adaptation to the measuring point without calibration at the workshop
- Linear or customized characteristic
- 32 points linearization for volumetric measurement
- Approved for SIL 2 applications (with HART)
- Back documentation of measuring point
- Continuous self-diagnostics, status and diagnostic messages
- Configurable safety value
- Local display in %, mA, or physical units
- Process temperature from -196°C to +500°C
- Materials for use with aggressive media
- Micro sinter metal sensor technology

Figure 1 - PACTware — Operation Screen

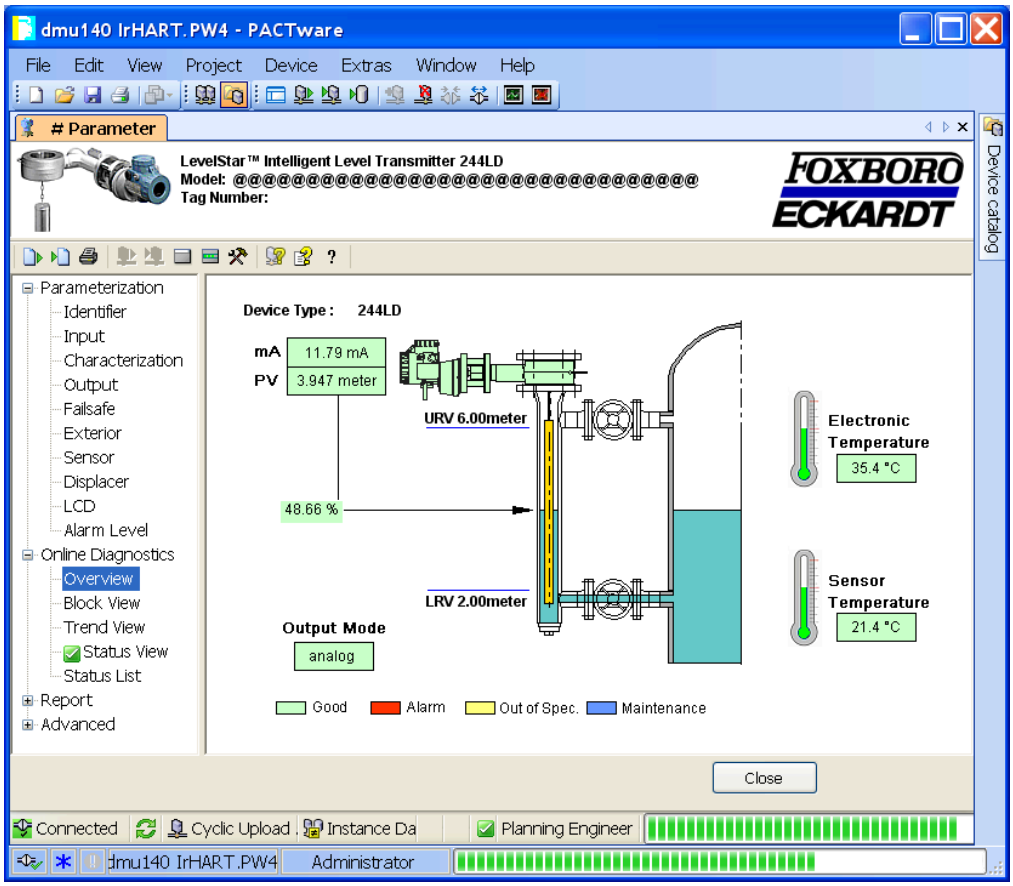

Figure 2 - FDT DTM — Configuration

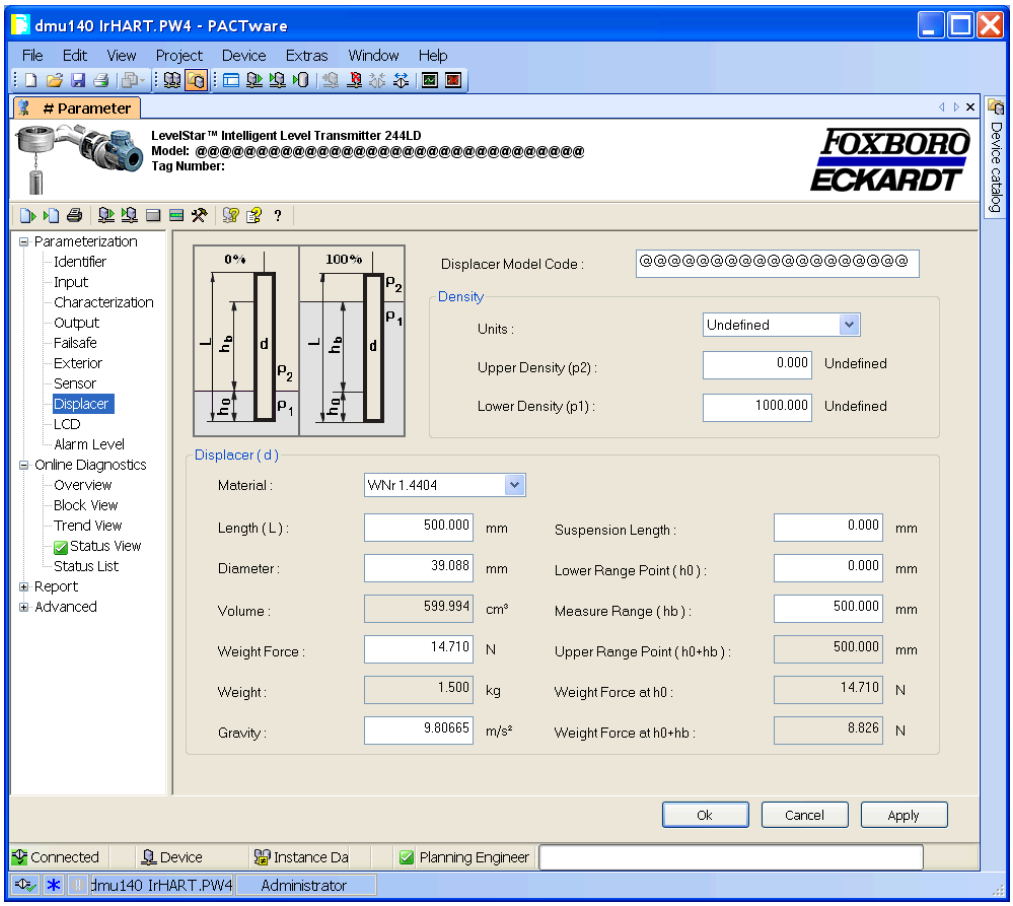

Supply via Power Supply Unit with Communication; Ex

Figure 3 - Supply via power supply unit with communication; Ex

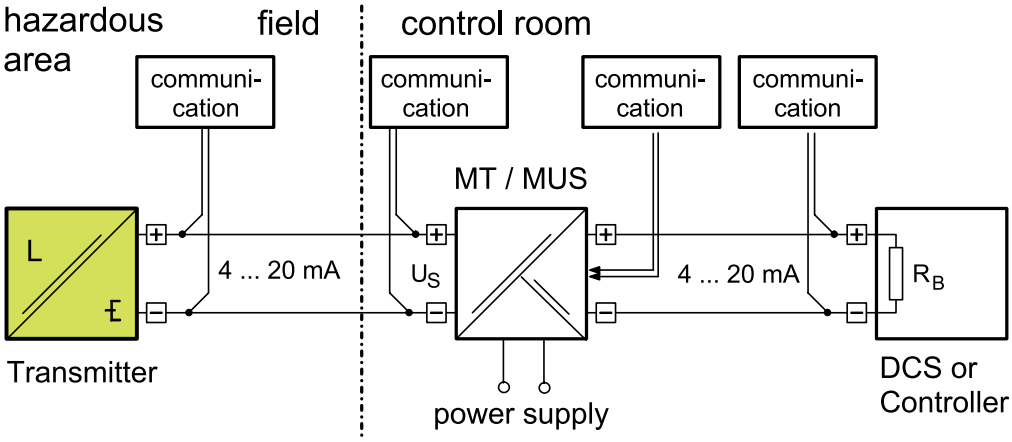

Direct Supply with Communication; Not Ex

Figure 4 - Direct Supply with Communication; Not Ex

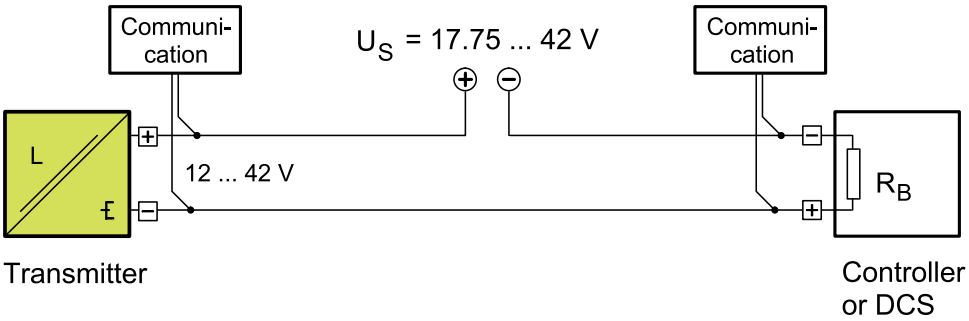

Maximum Voltage Supply is:

- 42 V for non-Ex and Flameproof HART as shown in the diagram
- 32 V for Flameproof FOUNDATION Fieldbus
- 24 V for FOUNDATION Fieldbus Intrinsically Safe
- 30 V for HART® Intrinsically Safe
- 32 V for HART®/FOUNDATION Fieldbus CSA approval

Connections and Operational Elements

Figure 5 - Connections and Operational Elements

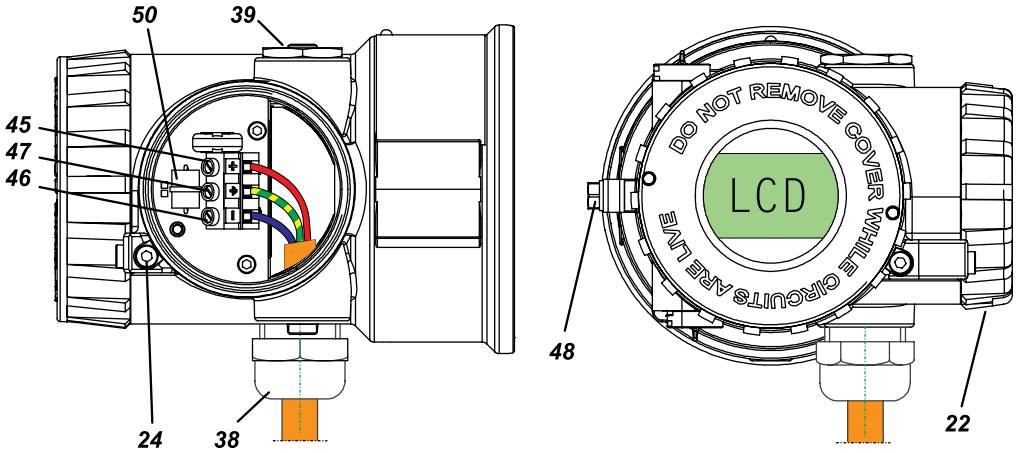

22 Connecting compartment cover

24 Cover lock

38 Cable gland (permitted cable diameter 6 to 12 mm)

39 Cover screw

45 Connection terminal "+" wire cross

46 Connection terminal "–" section

47 Ground terminal max. 2.5 mm² Test sockets (Ø 2 mm) integrated in terminal block

48 External ground terminal

50 Overvoltage protection (if present)

Technical Data

Data refer to the sensor material Type 316L (1.4404). Refer to Explosion protection certificates.

Input/Output

Measuring ranges	50 mm to 50 m, upper and lower range value continuously adjustable
Standard lengths of Displacer (204DE)	350 to 3000 mm, 14 to 120 in; other lengths on request
Weight of Displacer[1]	Maximum 25 N
Measuring span	2 to 20 N continue adjustable (to 1 N on request)
Span Ratio	
Turn-down	1:1 to 1:10 (1:20 on request)
Accuracy[2]	±0.2% at Level, Density and Interface measurement Increased accuracy with customized adjustment
Transfer function	Linear, or customized with up to 32 setpoints

Configuration

- With FDT-DTM per HART® protocol
  - With 2-wire connection 4-20 mA
  - With IR communication
- With multi-lingual, full graphic LCD display with %, mA, physical units and two buttons on the outside

Load: RBmax = (US – 12 V) / 23 mA

FOUNDATION Fieldbus H1 Communication

Connection	Twisted and shielded two-wire cable according to recommendation based on IEC 1158-2
Supply voltage U_s	9 to 32 V dc[3], V_{pp}≤1%
Operating current	10.5 mA ±0.5 mA (base current)
Digital communication	FF specification ITK Profile 6, Link-Master (LAS), function blocks 2AI, PID, IS, OS, AR
Signal amplitude	±8 mA
Fault current	≤13 mA
Operating values	According to IEC 1158-2
Bus connection	Fieldbus interface based on IEC 1158-2
Power supply	Power supply is dependent on the application by means of segment coupler

1. For measurement of interface or density: weight 25 N + buoyant force at lowest density.
2. Accuracy according to ANSI / ISA - S51.1 - 1979.
3. With Intrinsically Safe device, 9 to 24 V dc.

Configuration	
Software	National Instruments; NI-FBUS Configurator
Hardware	FBUS interfaces from National Instruments (USB-FBUS and PCMCIA-FBUS)
Control systems	FOUNDATION Fieldbus H1 compatible
Failure Handling	
Substitute value	Last value or safety value
Safety value	Adjustable –110 to +110% of out
Reset substitute value	Automatically or manual

HART Communication

Connection	Two-wire system
Supply voltage U_S[4]	>12 V + R_b 0.025 A[5]
Current sink	24 mA maximum
Signal range	4 to 20 mA
Operating range	3.8 to 20.5 mA (according to NE 43)
Critical error alarms in the 2-wire communication	<3.6 mA and >21 mA
HART® Protocol	
2-wire	1200 Baud, HART compliant
IR communication	19200 Baud
Communication Hardware	
Hand terminal	HT 375/475
PC Software	WIN xx and FDT/DTM

4. U_S (max) with intrinsically safe device < 30 V, otherwise < 42 V.
5. R_b is the total burden resistor for lines, HART measurement resistor, and communication.

Operating Conditions

NOTE: Not with all materials. See Comparison of Material, page 18.

Process temperature	-196°C to 500°C
Pressure rating according to • DIN • ANSI	 • PN 16, 40, 63, 100, 160, 250 • Class 150, 300, 600, 900, 1500
Ambient temperature	For flameproof version Ex db (AD 931): • -20°C to +85°C for temperature class T4 • -20°C to +75°C for temperature class T6
	For intrinsically safe version Ex ia (AID 421): • -20°C to +80°C for temperature class T4 • -20°C to +75°C for temperature class T6[6]
Relative humidity	Up to 100%
Condensation	Permitted
Transportation storage temperature	-40 to 85°C
Protection	IP 66 (according to DIN 40 050, EN/IEC 60529)

The device can be operated at a class D2 location in accordance with DIN IEC 654, part 1.

⚠ CAUTION
EQUIPMENT OPERATION HAZARD The maximum permissible temperature for the electronics housing is 85°C and internal sensor/measuring cell is 120°C. Do not exceed these temperatures. **Failure to follow these instructions can result in injury or equipment damage.**

Operation Condition Effects

Ambient temperature • Zero • Span	-10 ... +70°C • < 0.1% / 10 K[7] • < 0.07% / 10 K
Total $\left(0.1 \frac{\text{max. span}}{\text{adjusted sp.}} \pm 0.07 \frac{\text{Measured value}}{\text{adjusted span}}\right)\% / 10\ K$ (*sp.* = measuring span) < -10°C / > +70°C	Twice the value
Process temperature	< 0.1% / 10 K[7]
Operating pressure	No influence (vacuum resistant)

6. Display not readable at T ≤ 20°C or T > 70°C.
7. For maximum measuring span.

Transitional Behavior

Dynamic behavior	
• Damping (90%-time) • Switch-on time • Step response (63%-time) with damping 0s	• 0 to 32 s • 7 s • 250 ms
Update rate	10 / s
Long term stability	< 0.2% / 6 months at 20°C[8]
Noise suppression	
• Common mode voltage • Common mode rejection • Series mode rejection • Filter	• < AC 250 V_{eff} • 120 dB • 50 dB • Smart Smoothing

Materials; Pressure Rating and Contact Face, Mounting Direction

See Model Code, page 20.

Material Amplifier housing	Aluminum (Alloy No. GDAl Si 12), Polyurethane coated, or Stainless Steel
For Sour Gas applications according to NACE Standard MR-0175 and MR-0103:	
Wafer body	316L (1.4404)
Torque tube[9]	Nickel Alloy C or Inconel 600

Mounting

Mounting method: Sandwich mounted

- according to DIN: DN 80, DN 100
- according to ANSI: 3 inch, 4 inch

8. For maximum measuring span
9. The material of the seal at the Torque tube bearing corresponds to the material of the head piece.

NOTICE

RISK OF IMPROPER INSTALLATION

Always follow the RH or LH version as shown in 244LD LevelStar Versions, page 16.The device can not be used “upside down”. All internal parts are mounted and calibrated in inverse manner. The conversion can be performed only by the manufacturer or a contractual partner. Otherwise calibration and pressure tests are considered invalid.

Failure to follow these instructions can result in equipment not working.

Weight

- For Transmitter: see Model Code, page 20
- For Displacer: see Model Code 204DE, page 28

Electrical Connection

- Cable entry thread: M20x1.5 or 1/2-14 NPT
- Screw terminals: wire cross-section up to 2.5 mm ^{2}
- Test sockets: Ø2 mm

NOTE: Order cable gland and screwed sealing plug separately under model code BUSG.

Electromagnetic Compatibility EMC

Operating Conditions	Industrial Environment
Immunity according to EN 61326-1:2013-07	Fulfilled
Emission according to • EN 61326-1:2013-07 • EN 55011:2009+A1:2010	Fulfilled
NAMUR recommendation NE 21 Status August 2017	Fulfilled

Safety Requirements

For information about equipment handling, maintenance, and avoiding potential hazards, see *244LD LevelStar Intelligent Buoyancy Transmitter for Level, Interface and Density – HART® and FOUNDATION Fieldbus, Safety Operating Instructions*, (MI EML0010-Ex).

CE Compliance

Electromagnetic compatibility	2014/30/EU fulfilled
Explosion protection according to ATEX	2014/34/EU
RoHS2[10]	2011/65/EU

Safety

According to EN 61010-1 (resp. IEC 1010-1)	Safety class III
Internal fuses	None
External fuses	Limitation of power supplies for fire protection must be observed per EN 61010-1, appendix F (resp. IEC 1010-1)

⚠ WARNING

RISK OF EQUIPMENT DAMAGE OR INJURY

Use the appropriate fuse per EN 61010-1 (resp. IEC 1010-1).

Failure to follow these instructions can result in death, serious injury, or equipment damage.

10. RoHS and REACh compliance documents for the 244LD can be downloaded from https://checkaproduct.se.com

244LD LevelStar Versions

Figure 6 - 244LD LevelStar Versions

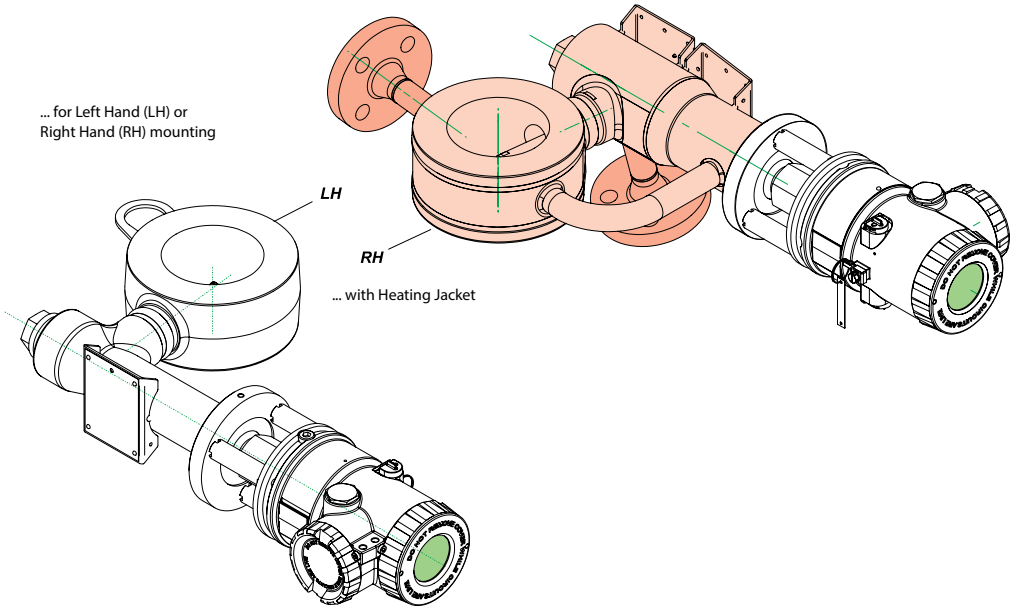

Electrical Classification ATEX

With appropriate order only.

Local requirements must be observed.

Product	Type	Approval	Test Certificate	Guideline 2014/34/EU
Intrinsically safe	AID 421 + AD432	II 2 G Ex db ia IIC T4/T6 Gb	EPS 23 ATEX 1308 X	EN IEC 60079-0:2018
	AID 421 + AD432 A/B	II 1/2 G Ex db ia IIC T4/T6 Ga/Gb	EPS 23 ATEX 1309 X	EN 60079-1: 2014
				EN 60079-11: 2012
				EN 60079-26: 2015
Flameproof	AD 931 + AD432 A/B	II 1/2 G Ex db IIC T4/T6 Ga/Gb	EPS 23 ATEX 1319 X	EN IEC 60079-0:2018
	AD 931 + AD432	II 2 G Ex db IIC T4/T6 Gb	EPS 23 ATEX 1309 X	EN 60079-1: 2014
				EN 60079-26: 2015

Version with Heating Jacket

Figure 7 - Sandwich-mounted between displacer chamber 204DC and cover flange 204BCF, with displacer 204DE

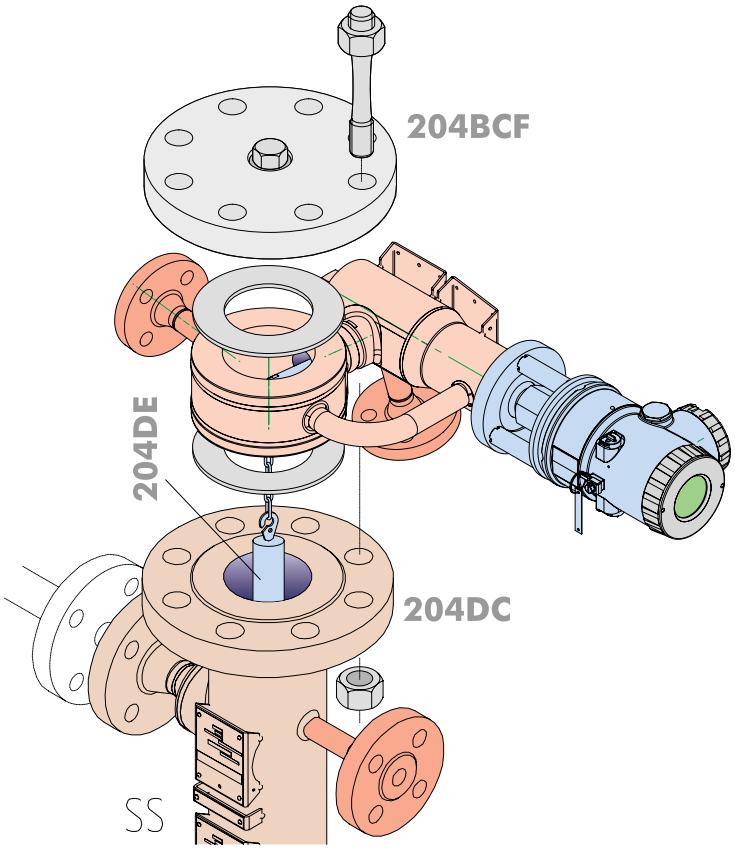

Comparison of Material

Code	WNr	DIN	Remarks	Equivalent to
P235G1TH P235GH	1.0305 1.0345	EN 10 216-2	VdTÜV - Wbl. 457	ASTM A 106 A
P250GH	1.0460	EN 10 273	VdTÜV - Wbl. 350/3	ASTM A 105
X6 CrNiMoTi 17 12 2	1.4571	DIN EN 10088-3	VdTÜV - Wbl. 411	ASTM 316Ti
X2 CrNiMo 17 13 2	1.4404		VdTÜV - Wbl. 411	ASTM 316L
X2 CrNiMo 18 14 3	1.4435		VdTÜV - Wbl. 411	
X3 CrNiMo 17 13 3	1.4436		VdTÜV - Wbl. 411	
NiMo 16 Cr 15 W	2.4819	17 744	equal to Hastelloy C276 VdTÜV - Wbl. 400	UNS N10276
NiCr 15 Fe	2.4816	17 742	Inconel 600 VdTÜV - Wbl. 305	UNS N06600
NiCr 22 Mo 9 Nb	2.4856	17 744	Inconel 625 VdTÜV 499	UNS N06625
NiCr 21 Mo	2.4858	17 744	Inconel 825 VdTÜV 432	UNS N08825
X 2 CrNiMo 22 5 3	1.4462	EN 10222-5	Duplex VdTÜV 418	UNS S31803
GD - AlSi 12	3.2582.05	17 007	Al - Die-casting	

Service Limits of Wafer Body PN 250 made of (material)

Maximum operating pressure in bar at temperature in °C

1.0460						
°C	**-10 to 120**	**200**	**250**	**300**	**350**	
bar	250	200	175	150	140	DIN
bar	231	219	206	180	145	ANSI

1.4404 / 1.4435 / 1.4571								
°C	**-196 to -10**	**-10 ... +50**	**100**	**200**	**300**	**400**	**500**	
bar	250	250	230	200	177	162	148	DIN
bar	248	248	211	178	158	145	138	ANSI

1.4462							
°C	**–10 to 50**	**100**	**150**	**200**	**250**	**280**	
bar	250	225	209	194	184	178	DIN
bar	260	234	218	201	191	185	ANSI

Inconel 625							
°C	**-196 to 50**	**100**	**200**	**300**	**400**	**450**	
bar	250	225	209	194	184	178	DIN
bar	260	234	218	201	191	185	ANSI

Inconel 825							
°C	**-10 to 50**	**100**	**200**	**300**	**400**	**450**	
bar	250	216	187	176	164	159	DIN
bar	260	224	195	183	171	165	ANSI

Hastelloy C (2.4610 / 2.4819 / 2.4602)							
°C	**-196 to -10**	**50**	**100**	**200**	**300**	**400**	
bar	250	250	233	209	200	184	DIN
bar	260	260	243	217	209	192	ANSI

Table of Weights

Transmitter	**Weight [kg]**					
	DIN PN		**ANSI Class**			
	16 to 160	**250**	**150**	**300 / 600**	**900**	**1500**
DN 80 / 3 inch	12.5	12.5	12.5			16
DN 100 / 4 inch	13.5	13.5	13.5			18.5

Model Code

Table 1 - Model Code for 244LD Levelstar

Model	Description
244LD	Intelligent Buoyancy Transmitter with Torque Tube
Wafer Body Material (Process wetted)	
-K	1.0460 (~A 105 Carbon Steel), application from -10 to 350°C
-S	1.4404 (316L) or 1.4435 if Pressure Rating codes H1 and H2 are selected, application from -60 to 400°C
-U	1.4404 (316L) or 1.4435 if Pressure Rating codes H1 and H2 are selected, application from -196 to 400°C
-T	1.4404 (316L) or 1.4435 if Pressure Rating codes H1 and H2 are selected, application from -60 to 500°C
-H	1.4541 (321), application from -60 to 400°C
-N	1.4462 (Duplex), application from -10 to 280°C
-R	2.4856 (Inconel 625), application from -196 to 450°C
-C	2.4819 (Hastelloy C/276), application from -196 to 400°C
Torque Tube Material (Process wetted)	
S	1.4404 (316L)
X	Nickel Alloy C/276
I	2.4816 (Inconel 600)
M	2.4375 (Monel K500)
Wafer Body Flange Size (Nominal size)	
0	DN 70 (available with Wafer Body Material S, U, T, and Torque Tube Material S and X)
1	DN 80
2	DN 100
3	3 inch
4	4 inch

Table 1 - Model Code for 244LD Levelstar (Continued)

Model	Description
Wafer Body Pressure Rating & Contact Face	
B1	PN40 (PN16 to PN40) B1/B1 according to DIN EN 1092-1
B2	PN250 (PN16 to PN250) B2/B2 according to DIN EN 1092-1[11]
DC	PN250 (PN16 to PN250) D/C (Groove Face / Tongue Face according to DIN EN 1092-1)[11] [12]
DD	PN250 (PN16 to PN250) D/D (Groove Face / Groove Face according to DIN EN 1092-1)[11]
FF	PN250 (PN16 to PN250) F/F (Recess Face / Recess Face according to DIN EN 1092-1)[11]
FE	PN250 (PN16 to PN250) F/E (Recess Face / Spigot Face according to DIN EN 1092-1[11] [13]
L1	PN250 (PN16 to PN250) L/L (Lens Face / Lens Face according to DIN 2696)[11]
H1	PN400 L/L Lense (Lens Face / Lens Face according to DIN 2696)[14] [15]
H2	PN500 L/L Lense (Lens Face / Lens Face according to IG-Norm High Pressure Version)[15] [16]
R1	ANSI Class 150 RF/RF (Raised Face / Raised Face)[17]
R2	ANSI Class 900 (300/600/900) RF/RF (Raised Face / Raised Face)[17]
R3	ANSI Class 1500 RF/RF (Raised Face / Raised Face)[17]
S1	ANSI Class 150 SF/SF (Smooth Finish / Smooth Finish)[17]
S2	ANSI Class 900 (300/600/900) SF/SF (Smooth Finish/Smooth Finish)[17]
S3	ANSI Class 1500 SF/SF (Smooth Finish / Smooth Finish)[17]
J1	ANSI Class 150 RJF/RJF[17]
J2	ANSI Class 900 (300/600/900) RJF/RJF[17]
J3	ANSI Class 1500 RJF/RJF[17]
LM	ANSI Class 300 to 1500, LF/LM (Large Female / Large Male)[17]
LF	ANSI Class 300 to 1500, LF/LF (Large Female / Large Female)[17]
LT	ANSI Class 300 to 1500, LG/LT (Large Groove / Large Tongue)[17]
LG	ANSI Class 300 to 1500, LG/LG (Large Groove / Large Groove)[17]
GT	ANSI Class 150, SG/ST (Small Groove / Small Tongue)[17]
ST	ANSI Class 300 to 1500, SG/ST (Small Groove / Small Tongue)[17]
GG	ANSI Class 150, SG/SG (Small Groove / Small Groove)[17]
SG	ANSI Class 300 to 1500, SG/SG (Small Groove / Small Groove)[17]

11. Available with Wafer Body Flange Size 1 or 2.
12. D at top.
13. F at top.
14. Available with Wafer Body Flange Size 1.
15. Available with Wafer Body Material codes S, U, T, or Torque Tube Material codes S, C.
16. Available with Wafer Body Flange Size 0.
17. Available with Wafer Body Flange Size 3 or 4.

Table 1 - Model Code for 244LD Levelstar (Continued)

Model	Description
Wafer Body Mounting Direction: (Amplifier to Body)	
R	Right Hand Mounted
L	Left Hand Mounted
Right Hand Mounted with Heating Jacket	
A	Connecting flanges B1 / DN15, PN40 (DIN EN 1092-1)[18 19 20]
B	Connecting flanges B1 / DN25, PN40 (DIN EN 1092-1)[18 19 20]
C	Connecting flanges B2 / DN15, PN40 (DIN EN 1092-1)[18 19 20]
D	Connecting flanges B2 / DN25, PN40 (DIN EN 1092-1)[18 19 20]
E	Connecting flanges RF/SF, 1/2 inch, Class 300[21 19 20]
F	Connecting flanges RF/SF, 1 inch, Class 300[18 19 20]
G	Connecting flanges RJF, 1/2 inch, Class 300[21 19 20]
H	Connecting flanges RJF, 1 inch, Class 300[21 19 20]
Version	
N	Base VERSION - LEVELSTAR - (244LD)[22 23]
Cable Entry	
M	M20x1.5 without cable gland
N	1/2-14 NPT without cable gland
Communication	
H	HART
B	FOUNDATION Fieldbus H1[24]

18. Wafer Body Flange Size code 3 available only with Wafer Body Pressure Rating code R2, S2, J2; Wafer Body Flange Size code 4 available only with Wafer Body Pressure Rating code R1, S1, J1, GT, GG.
19. Available with Wafer Body Material codes S, U, T.
20. Not with Pressure Rating H1 or H2.
21. Wafer Body Flange Size code 3 available only with Wafer Body Pressure Rating code R2, S2, J2; Wafer Body Flange Size code 4 available only with Wafer Body Pressure Rating code R1, S1, J1, GT, GG.
22. Only with Communication H (HART®) and electrical Classification 0C6, 1C6, D0C, D1C, 2C6.
23. Electrical Classification FDZ, CDZ, GA6, GDZ, NA6, NDZ, BA6, BDZ.
24. LevelStar with Electrical Classification D1C, D0C, 1C6, 0C6, 2C6, ZZZ.

Table 1 - Model Code for 244LD Levelstar (Continued)

Model	Description
Electrical Classification	
0C4	ATEX Intrinsically Safe Zone 0, IIC T4[25]
0C6	ATEX Intrinsically Safe Zone 0, IIC T6 [25]
1C4	ATEX Intrinsically Safe Zone 1, IIC T4
1C6	ATEX Intrinsically Safe Zone 1, IIC T6
D0C	ATEX Flameproof Zone 1 Ga, IIC T6
D1C	ATEX Flameproof Zone 1 Gb, IIC T6 [25]
FDZ	FM Explosionproof (Transtar Housing)
GA0	EAC Intrinsically Safe Zone 0 - IIC T6 [26]
GA1	EAC Intrinsically Safe Zone 1 - IIC T6
GD1	EAC Flameproof Zone 1 - IIC T6
NA6	NEPSI Intrinsically Safe
NDZ	NEPSI Flameproof
BA6	INMETRO Intrinsically Safe
ZZZ	For General Purpose Areas; without certification
Options	
H	Housing Complete Stainless Steel
M	External Push Buttons for Maintenance [27]
Tag No. Labeling	
L	Stainless Steel Label Fixed with Wire
Certificates	
1	EN 10204-2.1, Certificate of Compliance
2	EN 10204-2.2, Specific Test Report (Calibration)
3	EN 10204-3.1, Inspection Certificate of Process Wetted Material (for wafer body only)
4	PED 2014/68/EU additional unit verification, according to module F/G
P	EN 10204-2.2, Specific Test Report (Pressure Test)
6	Comply with NACE Standard MR0175 not with Wafer Material K (Carbon Steel) and not with Torque Tube Material S (Stainless Steel)
I	Comply with NACE Standard MR0103 not with Wafer Material K (Carbon Steel) and not with Torque Tube Material S (Stainless Steel)
Q	SIL 2 Certificate [28]
Material Test	
7	X-Ray or Isotope Test for Weldings
8	Dye Penetration Test
5	PMI Test

25. Not available with Wafer Body Pressure Rating & Contact Face codes L1, J1, J2, J3, H1, H2, DD.
26. Not with Pressure Rating H1 or H2.
27. Not with Options -H and Version B, S or C.
28. Available only with HART® Communication.

Table 1 - Model Code for 244LD Levelstar (Continued)

Model	Description
Subassemblies	
N	TRANSSTAR-housing with LEVELSTAR-electronic for selected code (244LD-*********-N)[29]
W	Torque Tube for selected code (244LD-*********-W)[30]
X	Amplifier for selected code (244LD-*********-X)[31]
Y	Complete Sensor for selected code (244LD-*********-Y)[32]

29. Not available with Optional features M, R, B, V, 9, K, A, G, 2, 3, 4, 6, Q, 7, 8, 5, W, X, Y, or Z.
30. Not available Optional features H, R, B, L, F, V, 9, K, A, G, 2, 4, Q, X, Y, or Z.
31. Not available with Optional features H, R, B, V, 9, K, A, G, 2, 3, 4, 6, Q, 7, 8, 5, W, Y, or Z.
32. Not available with Optional features H, R, B, L, F, V, 9, K, A, G, 2, Q, 7, 8, 5, W, X, or Z.

Displacer 204DE

NOTE: $\Delta\rho = \rho 1 - \rho 2$; where $\rho 1$ = density of lower medium; $\rho 2$ = density of upper medium

Table 2 - Typical Dimensions and Weights for Density Ranges $\Delta\rho$

Material	316L(1.4404/1.4435)[33]												
Code	-S(PN 100)				-T[34](PN 40 / 63)					-S(PN 250)			
	Density Range Δρ												
	250 to 1500 kg/m³				300 to 600 kg/m³					400 to 2000 kg/m³			
Length L	ϕ mm	Volume cm³	Weight N	PN bar	ϕ mm	Volume cm³	Weight N	PN bar	ρ_{min}[35] kg/m³	ϕ mm	Volume cm³	Weight N	PN bar
mm													
350	60.3	1000	19	100	101.6	2840	38	40	460	42.4	500	18	250
500	48.3	920	17	100	88.9	3100	43	63	580	42.4	710	24	250
750	42.2	1060	21	100	76.1	3410	44	63	545	33.7	670	21	250
1000	33.7	890	17	100	60.3	2855	41	63	545	26.9	570	18	250
1200	33.7	1070	20	100	60.3	3425	48	63	675	26.9	680	22	250
1500	26.9	850	16	100	51	3065	39	63	460	21.3	540	17	250
1800	26.9	1020	19	100	42.4	2540	38	63	495	21.3	640	20	250
2000	26.9	1140	21	100	42.4	2825	41	63	565	21.3	710	22	250
2500	21.3	890	20	100	38	2840	37	63	425	17.2	580	16	250
3000	21.3	1070	24	100	38	3400	45	63	575	17.2	700	23	250
inch													
14	60.3	1020	20	100	101.6	2885	38	40	455	42.4	510	18	250
32	42.4	1150	23	100	76.1	3700	47	63	595	33.7	730	23	250
48	33.7	1090	20	100	60.3	3480	49	63	680	26.9	690	22	250
60	26.9	870	16	100	51	3115	40	63	465	21.3	540	18	250
72	26.9	1040	19	100	42.4	2580	38	63	505	21.3	650	21	250
84	26.9	1210	22	100	42.4	3000	44	63	635	21.3	760	23	250
96	21.3	870	20	100	38	2765	37	63	420	17.2	570	16	250
120	21.3	1090	25	100	38	3455	46	63	595	17.2	710	24	250

33. Using displacer material 1.4571 can cause small deviations in diameter, volume and weight.
34. For measurement of interface or density, the maximum density of the lower medium is 1350 kg/m³.
35. Minimum density of the lower medium.

Table 3 - Typical Dimensions and Weights for Density Ranges Δρ

Material	PTFE /PTFE with 25% C				Hastelloy C276			
Code	-S(PN 500)				-S(PN 100 / 160)			
	Density Range Δρ							
	200 to 1500 kg/m 3				300 to 1500 kg/m3			
Length L	ϕ mm	Volume cm3	Weight N	PN bar	ϕ mm	Volume cm3	Weight N	PN bar
mm								
350	62	1056	23	500	60.3	1000	18	100
500	51	1021	23	500	48.3	920	19	100
750	42	1039	24	500	48.3	1370	27	100
1000	35	961	21	500	33.7	890	19	100
1200	35	1153	25	500	33.7	1070	22	100
1500	30	1060	24	500	26.9	850	18	160
1800	28	1107	25	500	26.9	1020	21	160
2000	25	981	22	500	26.9	1140	23	160
2500	22.5	993	23	500	21.3	890	23	160
3000	20	942	22	500	21.3	1070	27	160
inch								
14	62	1074	23	500	60.3	1020	18	100
32	42	1126	26	500	33.7	720	16	100
48	35	1171	26	500	33.7	1090	23	100
60	30	1076	24	500	26.9	870	18	100
72	28	1124	26	500	26.9	1040	21	160
84	25	1046	24	500	26.9	1020	25	160
96	22.5	968	22	500	21.3	870	23	160
120	20	957	22	500	21.3	1090	25	160

NOTICE

RISK OF EQUIPMENT DAMAGE

If a Displacer Chamber is used, the difference between the diameter of the Displacer and the inside diameter of the Displacer Chamber must be at least 10 mm. Other specifications include:

- Lengths: < 350 mm and > 3000 mm
- Density ranges < 300 kg/m3 and > 2000 kg/m3 (on request)

Failure to follow these instructions can result in equipment damage.

Accessories

For Displacer Chamber 204DC, Flange combination 204FK and Cover Flange Kit 204BCF, refer to PSS EML0901, 204xx Accessories for Buoyancy Transmitter.

Figure 8 - 204xx Accessories for Buoyancy Transmitter

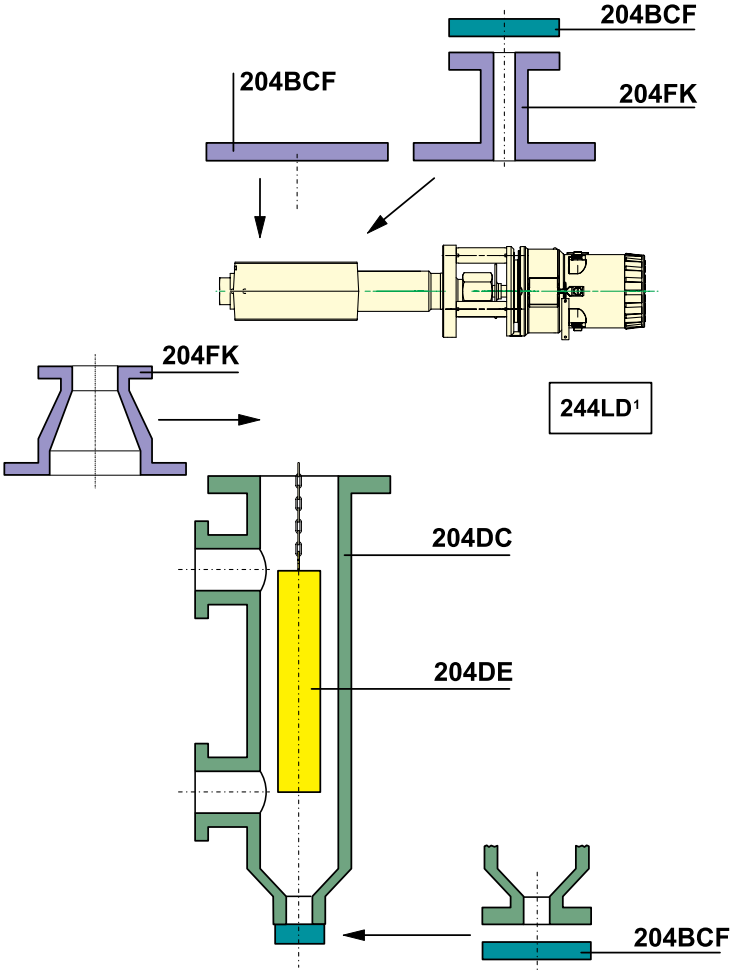

Model Code 204DE

Table 4 - Model Code for 204DE

Model	Displacer for Buoyancy Transmitters from 2 N buoyancy up to 20 N 204DE
Range Of Application [36]	
-S	Liquid Level - Media: Liquid / Gas or Air (Density difference = 250 kg/m^3 to 2000 kg/m^3) (= 9x10-3 lbm/in^3 to 72.2x10-3 lbm/in^3)
-T	Interface Level / Density - Media: Liquid 1 / Liquid 2 (Density difference = 300 kg/m^3 to 600 kg/m^3) (= 10.8x10-3 lbm/in^3 to 22.7x10-3 lbm/in^3) [37]
Displacer Material	
S	1.4404 (316L)
H	1.4541 (321)
P	PTFE (not for applications in Zone 0)
O	PTFE with 25% Carbon, for Zone 0
X	Hastelloy C/276
R	2.4856 (Inconel 625) [38]
M	2.4360 (Monel 400) [38]
T	3.7035 (Titan)
Pressure Rating	
D	Up to PN 100 / Class 600
E	Up to PN 160 / Class 900
F	Up to PN 250 / Class 1500
G	Up to PN 500 / Class 2500
Suitable for Flange Size (at top of vessel / chamber)	
0	DN 50
1	DN 70
2	DN 80
3	DN 100
4	DN 150
5	2 inch
6	3 inch
7	4 inch
8	6 inch

36. Upper and Lower Medium Density required (at operating temperature).
37. Consult TCO if pressure rating is F or G.
38. On ECEP request.

Table 4 - Model Code for 204DE (Continued)

Model	Displacer for Buoyancy Transmitters from 2 N buoyancy up to 20 N 204DE
Displacer Length "L": (inches are approximately)	
for Displacer Material codes P, and O	
A	300 mm (12 inch) to 2000 mm (79 inch), with partition > 1000 mm
B	2001 mm (79 inch) to 4000 mm (157 inch), with partition points
C	4001 mm (157 inch) to 6000 mm (236 inch), with partition points
D	6001 mm (236 inch) to 8000 mm (315 inch), with partition points
E	8001 mm (315 inch) to 10000 mm (394 inch), with partition points
F	10001 mm (394 in) to 12000 mm (472 in), with partition points
for Displacer Material codes S, H, C, R, M, and T	
K	300 mm (12 in) to 3000 mm (118 in) without partitioning
L	3001 mm (118 in) to 6000 mm (236 in) One partition point
M	6001 mm (236 in) to 9000 mm (354 in) Two partition points
N	9001 mm (354 in) to 12000 mm (472 in) Three partition points
O	12001 mm (472 in) to 15000 mm (591 in) Four partition points
Material and Length of the Suspension (Length “b”) [39]	
S1	1.4404 (316L) Standard length of Suspension [40]
S2	1.4404 (316L) Customized Suspension Length [41]
H1	1.4541 (321) Standard length of Suspension [40]
H2	1.4541 (321) Customized Suspension Length [41]
C1	Hastelloy C / Standard length of Suspension [40]
C2	Hastelloy C / Customized Suspension Length [41]
I1	2.4856 (Inconel 625) / Standard length of Suspension [40]
I2	2.4856 (Inconel 625) / Customized Suspension Length [41]
M1	2.4360 (Monel 400) / Standard length of Suspension [40]
M2	2.4360 (Monel 400) / Customized Suspension Length [41]
T1	3.7035 (Titan) / Standard length of Suspension [40]
T2	3.7035 (Titan) / Customized Suspension Length [41]

39. +/- 8 mm (+/- 0.3 inch).
40. Only in connection with Model Code 204DC.
41. Exact length required (Contact face of flange to upper end of displacer).

Table 4 - Model Code for 204DE (Continued)

Model	Displacer for Buoyancy Transmitters from 2 N buoyancy up to 20 N 204DE
Options	
-E	For application in Zone 0 (Additional grounding rope) (not available with Displacer Material: P)
-D	Damping Spring (Mat. 1.4310, maximum 250°C (482°F))
-C	Damping Spring (Mat. HC, maximum 350°C (662°F))
-L	Tag No. Labeling – Stainless Steel Label Fixed with Wire (Text required)
-Y	Density difference > 200 kg/m^3; < 300 kg/m^3 [42]
-Z	Density difference < 200 kg/m^3 [42]
Certificates	
-1	EN 10204-2.1 Certificate of Compliance
-3	EN 10204-3.1 Inspection Certificate of Process Wetted Metallic Material (not available with Displacer Material: P and O)
-5	PMI - Test (not available with Displacer Material: P and O)

42. Upper and Lower Medium Density required (at operating temperature).

Table of Versions

For Dimensions c, d, g, see 244LD up to PN 250 / Class 1500, page 32.

Table 5 - Versions for Dimensions c, d, g

Version		Form of Sealings	DN 80 / 3 inch			DN 100 / 4 inch		
PN			c	d	g	c	d	g
DIN EN	16	B1 DIN EN 1092	140	82	140	160	102	162
	40							
	63	B2 / C / D / F / E DIN EN 1092						
	100	Form L DIN 2696						
	160							
	250							
ANSI	150	RF / SG / ST ANSI B16.5	140	82	140	160	102	162
	300							
	600							
	900							
	1500							
	150	RJF ANSI B16.5	140	82	140	160	102	174
	300				147			
	600							
	900							
	1500			102	162			206
	300	LF / LM / LG / LT ANSI B16.5	140	82	140	160	102	174
	600							
	900							
	1500							

RF- Raised Face	**LG**- Large Groove
RJF- Ring Joint Face	**LT**- Large Tongue
LF- Large Female	**SG**- Small Groove
LM- Large Male	**ST**- Small Tongue

Dimensions

Figure 9 - 244LD up to PN 250 / Class 1500

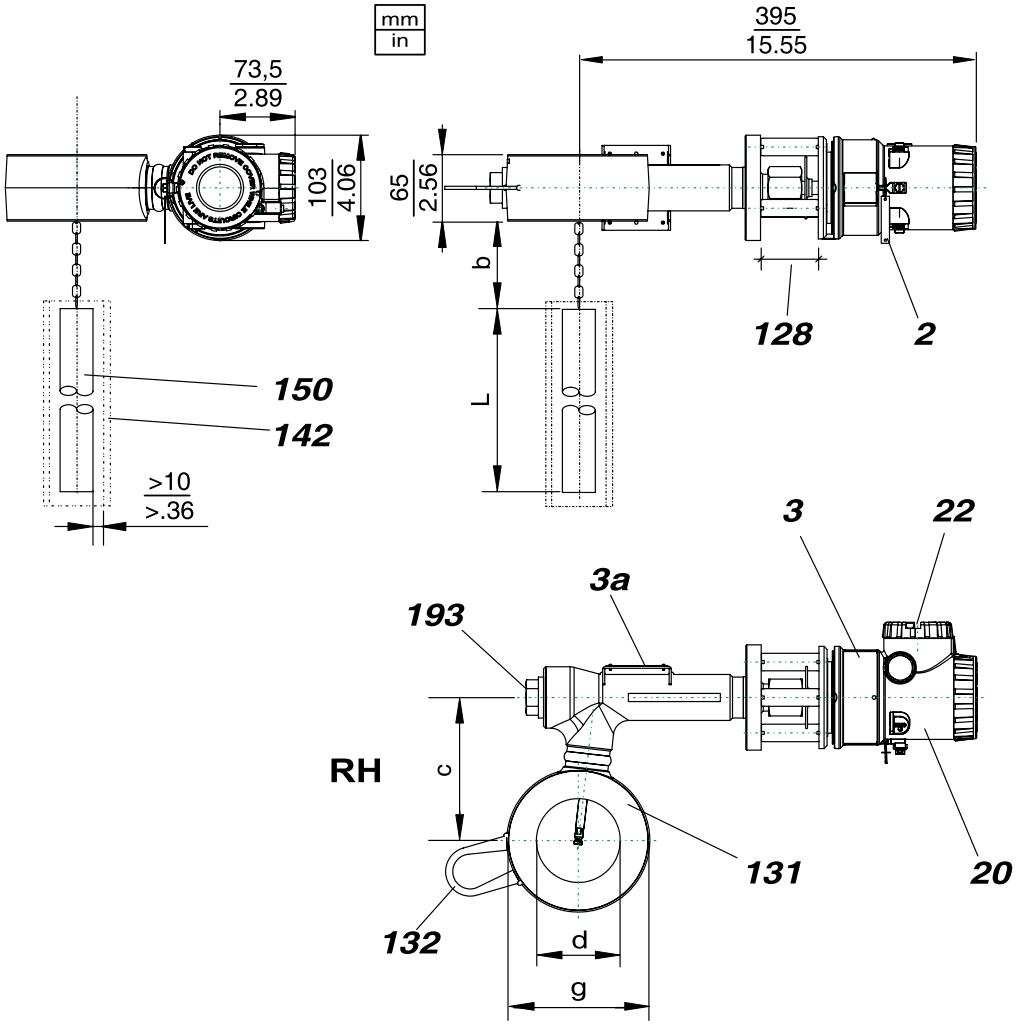

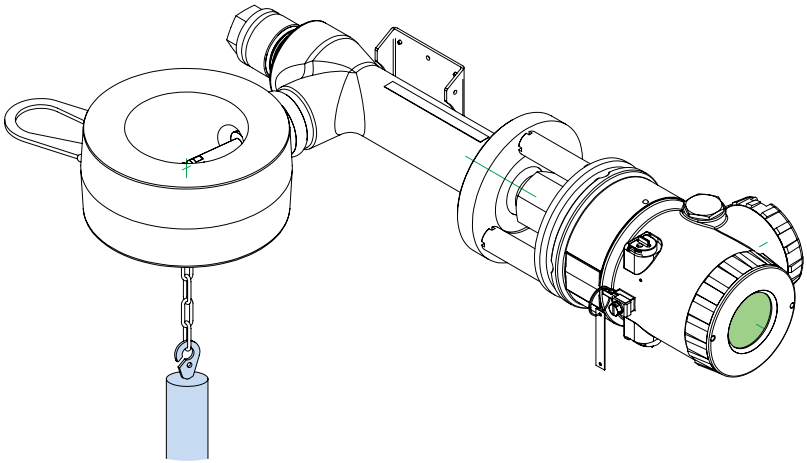

Figure 10 - 244LD up to PN 250 Class 1500 (FM approved)

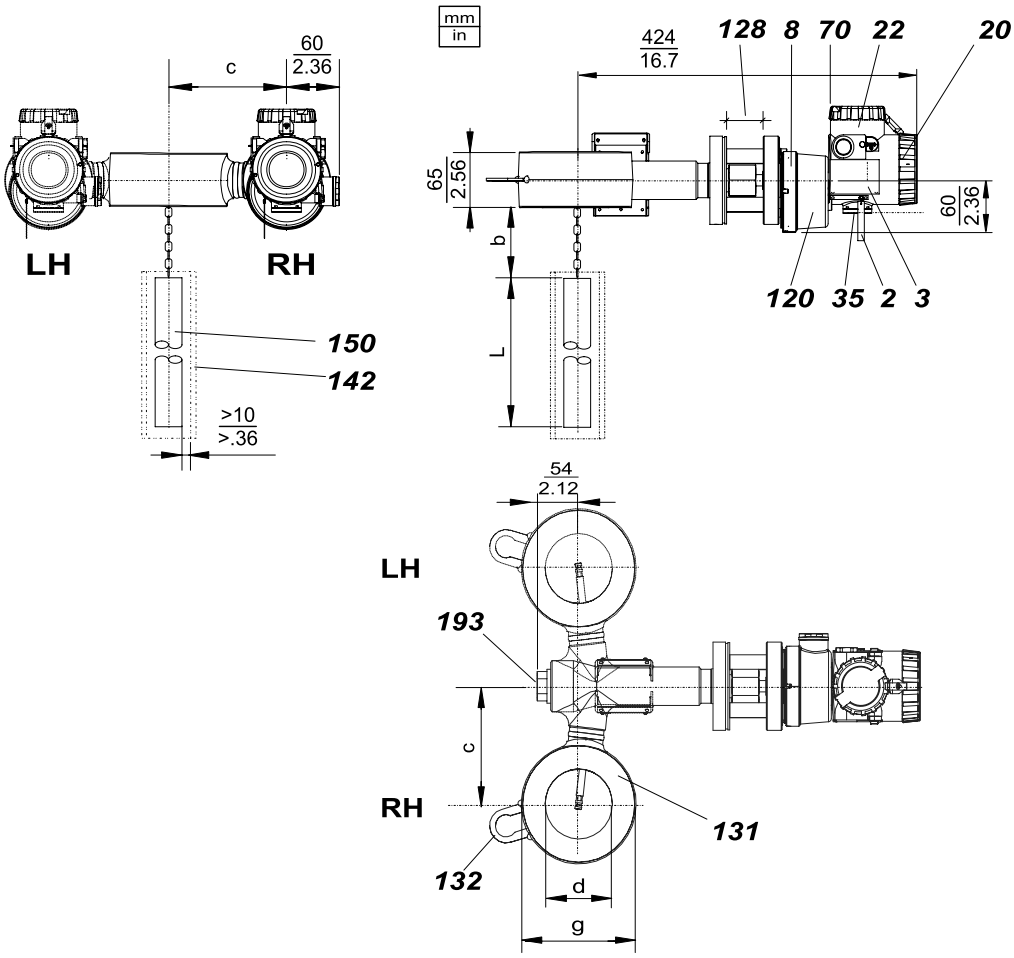

2	Name Plate
3	Data label
3a	Data plate pressure equipment directive PED Stainless steel plate
8	Data label (transmitter)
20	Amplifier housing
22	Connection compartment

35	Alternative connection
70	Disconnection between amplifier and measuring module
120	Measuring module housing
128	Heat sink
131	Wafer body
132	Lifting hook
142	Protective tube for displacer
150	Displacer
193	Lock screw
LH Left hand	Mounting amplifier to wafer body “Left hand mounted” (Model Code L)
RH Right Hand	Mounting amplifier to wafer body “Right hand mounted” (Model Code R)
b	Suspension length See Material and Length of the Suspension in Model Code for 204DE, page 28
c	Wafer-body-center to torque-tube-housing-center distance See Table of Versions, page 31
d	Inner diameter of wafer body See Table of Versions, page 31
g	External diameter of wafer body See Table of Versions, page 31

NOTE: The above mentioned RH dimensions are also for LH.

Schneider Electric Systems USA, Inc.
70 Mechanic Street
Foxboro, MA 02035
United States of America

Global Customer Support: https://pasupport.se.com

As standards, specifications, and design change from time to time,
please ask for confirmation of the information given in this publication.

© 2016 – 2024 Schneider Electric Systems USA, Inc. All rights reserved.

PSS EML0710