H250 Handbook

Variable area flowmeter

© KROHNE 05/2016 - 4000269303 - MA H250 R03 en

KROHNE

IMPRINT

All rights reserved. It is prohibited to reproduce this documentation, or any part thereof, without the prior written authorisation of KROHNE Messtechnik GmbH.

Subject to change without notice.

Copyright 2016 by
KROHNE Messtechnik GmbH - Ludwig-Krohne-Str. 5 - 47058 Duisburg (Germany)

1 Safety instructions 5

1.1 Intended use 5
1.2 Certifications 6
1.3 Safety instructions from the manufacturer 7
1.3.1 Copyright and data protection 7
1.3.2 Disclaimer 7
1.3.3 Product liability and warranty 8
1.3.4 Information concerning the documentation 8
1.3.5 Warnings and symbols used 9
1.4 Safety instructions for the operator 9

2 Device description 10

2.1 Scope of delivery 10
2.2 Device version 11
2.2.1 Float damping 13
2.2.2 Pointer damping 13
2.3 Nameplate 14
2.4 Description code 15

3 Installation 16

3.1 General notes on installation 16
3.2 Storage 16
3.3 Installation conditions 17
3.3.1 Tightening torques 19
3.3.2 Magnetic filters 19
3.3.3 Heat insulation 20

4 Electrical connections 21

4.1 Safety instructions 21
4.2 Electrical connection indicator M8 21
4.2.1 Indicator M8M - limit switches 21
4.2.2 Indicator M8E - current output 22
4.3 Electrical connection indicator M9 25
4.3.1 Indicator M9 - limit switches 25
4.3.2 Indicator M9 - current output ESK2A 28
4.3.3 Indicator M9 - Profibus PA (ESK3-PA) 31
4.3.4 Indicator M9 - totalizer (ESK-Z) 32
4.4 Electrical connection indicator M10 35
4.4.1 Indicator M10 35
4.4.2 Power supply - current output 35
4.4.3 Switching outputs B1 and B2 38
4.4.4 Switching output B2 as a pulse output 40
4.4.5 Connection reset input R 41
4.5 Grounding connections 41
4.6 Protection category 42

5 Start-up 43

5.1 Standard device ... 43
5.2 Indicator M10 ... 43

6 Operation 44

6.1 Operating elements indicator M10 ... 44
6.2 Basic principles of operation ... 45
6.2.1 Functional description of the keys ... 45
6.2.2 Navigation within the menu structure ... 45
6.2.3 Changing the settings in the menu ... 46
6.2.4 Measures in the event of faulty indications ... 46
6.3 Overview of the most important functions and indicators ... 47
6.4 Error messages indicator M10 ... 48
6.5 Menu indicator M10 ... 50
6.5.1 Factory settings ... 50
6.5.2 Menu structure ... 51
6.5.3 Menu explanations ... 52

7 Service 56

7.1 Maintenance ... 56
7.2 Replacement and retrofitting ... 56
7.2.1 Replacing floats ... 56
7.2.2 Retrofitting float damping ... 57
7.2.3 Retrofitting pointer damping ... 57
7.2.4 Retrofitting limit switch ... 58
7.2.5 Replacement - Retrofitting ESK2A ... 59
7.2.6 Totalizer ... 60
7.3 Spare parts availability ... 61
7.3.1 List of spare parts ... 61
7.4 Availability of services ... 63
7.5 Returning the device to the manufacturer ... 63
7.5.1 General information ... 63
7.5.2 Form (for copying) to accompany a returned device ... 64
7.6 Disposal ... 64

8 Technical data 65

8.1 Operating principle ... 65
8.2 Technical data ... 66
8.3 Dimensions and weights ... 77
8.4 Measuring ranges ... 81

9 Notes 89

1.1 Intended use

CAUTION!
Responsibility for the use of the measuring devices with regard to suitability, intended use and corrosion resistance of the used materials against the measured fluid lies solely with the operator.

INFORMATION!
This device is a Group 1, Class A device as specified within CISPR11:2009. It is intended for use in industrial environment. There may be potential difficulties in ensuring electromagnetic compatibility in other environments, due to conducted as well as radiated disturbances.

INFORMATION!
The manufacturer is not liable for any damage resulting from improper use or use for other than the intended purpose.

The variable area flowmeters are suitable for measuring clean gases, vapours and liquids.

Intended use:

- The product may not contain any ferromagnetic particles or solids. It may be necessary to install magnetic filters or mechanical filters.
- The product must be sufficiently liquid and free of deposits.
- Avoid pressure surges and pulsing flows.
- Open valves slowly. Do not use solenoid valves.

Use suitable measures to eliminate compression vibrations during gas measurements:

- Short pipeline lengths to next restriction
- Nominal pipe size not greater than nominal device size
- Use of floats with damping
- Increase in operating pressure (while taking into account the resulting change in density and thus change in scale)

Observe installation conditions according to VDI/VDE 3513-3.

DANGER!
For devices used in hazardous areas, additional safety notes apply; please refer to the Ex documentation.

CAUTION!
Do not use any abrasive media containing solid particles or highly viscous media.

1.2 Certifications

CE marking

The device fulfils all applicable statutory requirements of the following EC directives:

- Pressure equipment directive
- For devices with electrical installations: EMC directive
- Devices for use in hazardous areas: ATEX directive

as well as

- NAMUR recommendations NE 21, NE 43 and NE 107

The manufacturer certifies successful testing of the product by applying the CE marking.
A CE declaration of conformity regarding the directives in question and the associated harmonised standards can be downloaded from our internet site.

1.3 Safety instructions from the manufacturer

1.3.1 Copyright and data protection

The contents of this document have been created with great care. Nevertheless, we provide no guarantee that the contents are correct, complete or up-to-date.

The contents and works in this document are subject to copyright. Contributions from third parties are identified as such. Reproduction, processing, dissemination and any type of use beyond what is permitted under copyright requires written authorisation from the respective author and/or the manufacturer.

The manufacturer tries always to observe the copyrights of others, and to draw on works created in-house or works in the public domain.

The collection of personal data (such as names, street addresses or e-mail addresses) in the manufacturer's documents is always on a voluntary basis whenever possible. Whenever feasible, it is always possible to make use of the offerings and services without providing any personal data.

We draw your attention to the fact that data transmission over the Internet (e.g. when communicating by e-mail) may involve gaps in security. It is not possible to protect such data completely against access by third parties.

We hereby expressly prohibit the use of the contact data published as part of our duty to publish an imprint for the purpose of sending us any advertising or informational materials that we have not expressly requested.

1.3.2 Disclaimer

The manufacturer will not be liable for any damage of any kind by using its product, including, but not limited to direct, indirect or incidental and consequential damages.

This disclaimer does not apply in case the manufacturer has acted on purpose or with gross negligence. In the event any applicable law does not allow such limitations on implied warranties or the exclusion of limitation of certain damages, you may, if such law applies to you, not be subject to some or all of the above disclaimer, exclusions or limitations.

Any product purchased from the manufacturer is warranted in accordance with the relevant product documentation and our Terms and Conditions of Sale.

The manufacturer reserves the right to alter the content of its documents, including this disclaimer in any way, at any time, for any reason, without prior notification, and will not be liable in any way for possible consequences of such changes.

1.3.3 Product liability and warranty

The operator shall bear responsibility for the suitability of the device for the specific purpose. The manufacturer accepts no liability for the consequences of misuse by the operator. Improper installation or operation of the devices (systems) will cause the warranty to be void. The respective "Standard Terms and Conditions" which form the basis for the sales contract shall also apply.

1.3.4 Information concerning the documentation

To prevent any injury to the user or damage to the device it is essential that you read the information in this document and observe applicable national standards, safety requirements and accident prevention regulations.

If this document is not in your native language and if you have any problems understanding the text, we advise you to contact your local office for assistance. The manufacturer can not accept responsibility for any damage or injury caused by misunderstanding of the information in this document.

This document is provided to help you establish operating conditions, which will permit safe and efficient use of this device. Special considerations and precautions are also described in the document, which appear in the form of icons as shown below.

1.3.5 Warnings and symbols used

Safety warnings are indicated by the following symbols.

DANGER!
This warning refers to the immediate danger when working with electricity.

DANGER!
This warning refers to the immediate danger of burns caused by heat or hot surfaces.

DANGER!
This warning refers to the immediate danger when using this device in a hazardous atmosphere.

DANGER!
These warnings must be observed without fail. Even partial disregard of this warning can lead to serious health problems and even death. There is also the risk of seriously damaging the device or parts of the operator's plant.

WARNING!
Disregarding this safety warning, even if only in part, poses the risk of serious health problems. There is also the risk of damaging the device or parts of the operator's plant.

CAUTION!
Disregarding these instructions can result in damage to the device or to parts of the operator's plant.

INFORMATION!
These instructions contain important information for the handling of the device.

LEGAL NOTICE!
This note contains information on statutory directives and standards.

- HANDLING
  This symbol designates all instructions for actions to be carried out by the operator in the specified sequence.

➲ RESULT
This symbol refers to all important consequences of the previous actions.

1.4 Safety instructions for the operator

WARNING!
In general, devices from the manufacturer may only be installed, commissioned, operated and maintained by properly trained and authorized personnel.
This document is provided to help you establish operating conditions, which will permit safe and efficient use of this device.

2.1 Scope of delivery

INFORMATION!
Inspect the packaging carefully for damages or signs of rough handling. Report damage to the carrier and to the local office of the manufacturer.

INFORMATION!
Do a check of the packing list to make sure that you have all the elements given in the order.

INFORMATION!
Look at the device nameplate to ensure that the device is delivered according to your order. Check for the correct supply voltage printed on the nameplate.

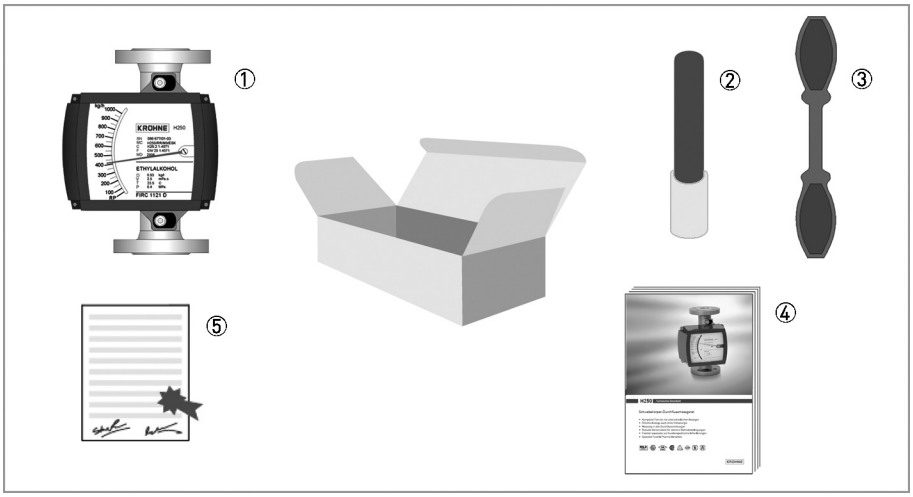

Figure 2-1: Scope of delivery

① Measuring device in ordered version
② For indicator M10 - bar magnet
③ For indicator M10 - key
④ Documentation
⑤ Certificates, calibration report (supplied to order only)

2.2 Device version

- H250 with indicator M9
- H250 with indicator M10
- H250 with indicator M8

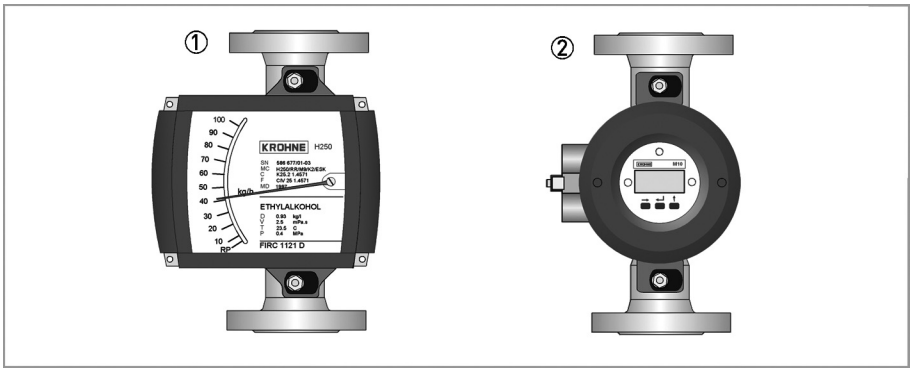

Figure 2-2: Versions M9 and M10

① H250/RR/M9

- Local indication without auxiliary power supply
- max. 2 limit switches, type NAMUR, NAMUR safety-oriented or transistor (3-wire)
- 2-wire current output 4…20 mA, HART® or Profibus-PA communication
- 6-digit flow counter (non Ex)
- Limit switches and signal output - optional intrinsically safe

② H250/RR/M10

- Explosion proof enclosure
- 2 digital adjustable limit switches, 2-wire open collector or type NAMUR
- 2-wire current output 4…20 mA, HART® communication
- Pulse output up to 10 Hz (also for electro-mechanical counters)
- 12-digit flow counter with external resetting (batch operation)

The following designs are available as options:

- H250 with indicator M9 as high-temperature version HT
- H250 with indicator M9 with added impact and corrosion protection (special paint finish)
- H250 with indicator M9 in Stainless Steel housing

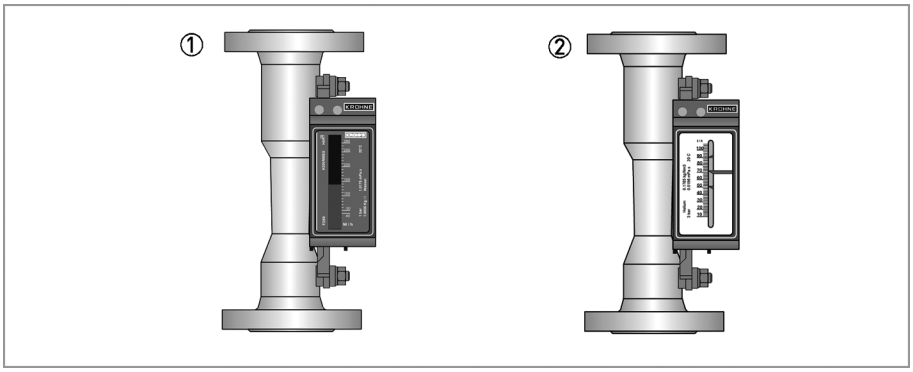

Figure 2-3: Version M8

① H250/RR/M8EG

- Electronic bar graph indicator
- 2-wire current output 4…20 mA, HART® communication

② H250/RR/M8MG

- Local indication without auxiliary power supply
- 2 limit switches, 2-wire, type NAMUR or NAMUR safety-oriented

2.2.1 Float damping

Float damping is characterised by high standstill times and self-centering. The damping sleeve is made of high performance ceramic or PEEK, depending on the medium and the application. Float damping can also be retrofitted for the user (refer to "Service").

Use of damping

- Generally when CIV and DIV floats are used for gas measurement.
- For TIV floats (H250/RR and H250/HC only) with an operating primary pressure:

Nominal size acc. to		Operating primary pressure	
EN 1092-1	ASME B16.5	[bar]	[psig]
DN 50	½"	≤0.3	≤4.4
DN25	1"	≤0.3	≤4.4
DN50	2"	≤0.2	≤2.9
DN80	3"	≤0.2	≤2.9
DN 100	4"	≤0.2	≤2.9

2.2.2 Pointer damping

The pointer system with its magnetic system basically contains pointer damping. An additional eddy current brake is advantageous for fluctuating or pulsing flows. The eddy current brake magnets surround the pointer vane ① without touching it, damping its movement. The result is a pointer position that is considerably calmer, and no distortion of the measured value. A clamp screw holds it in place securely. The eddy current brake can be retrofitted without having to recalibrate and while in operation (see Service).

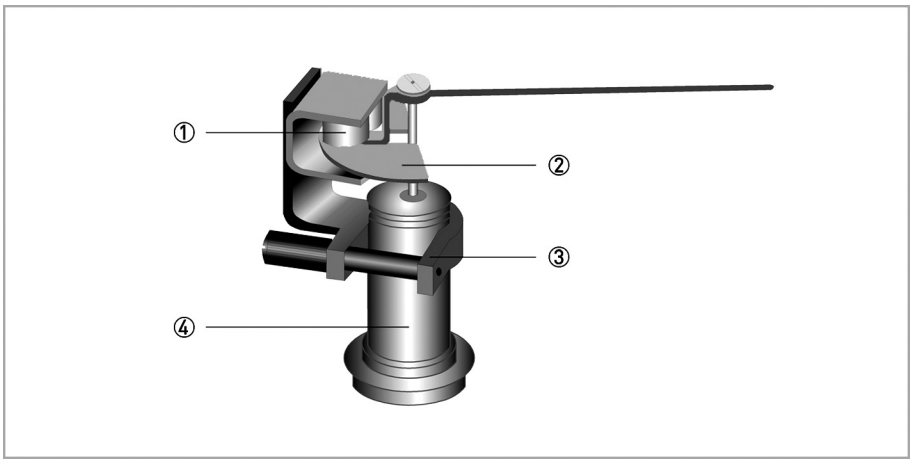

① Eddy current brake
② Pointer vane
③ Bracket
④ Pointer cylinder

2.3 Nameplate

INFORMATION!
Look at the device nameplate to ensure that the device is delivered according to your order. Check for the correct supply voltage printed on the nameplate.

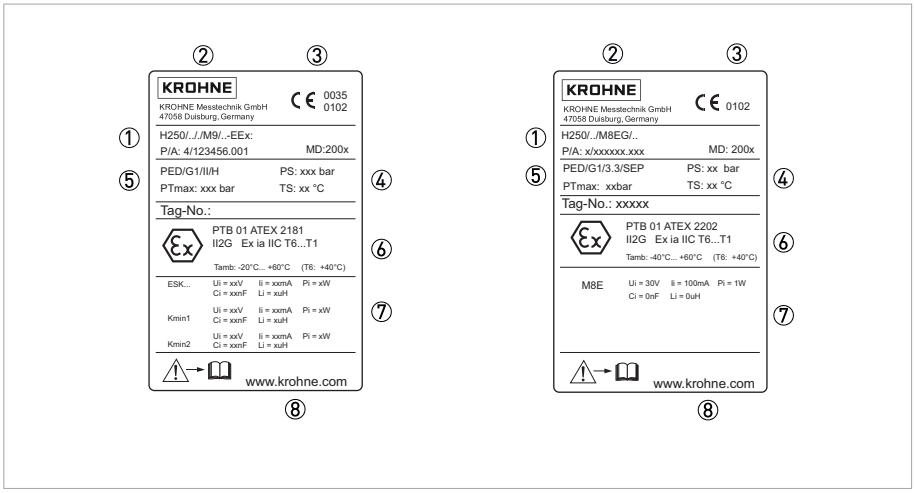

Figure 2-4: Nameplates on the indicator

① Device type
② Manufacturer
③ Notified ATEX & PED body
④ Rating data: temperature & pressure rating
⑤ PED data
⑥ Ex data
⑦ Electrical connection data
⑧ Internet site

Additional markings on the indicator

- SN - serial number
- SO - sales order / item
- PA - order
- Vx - product configurator code
- AC - article code

2.4 Description code

The description code* consists of the following elements:

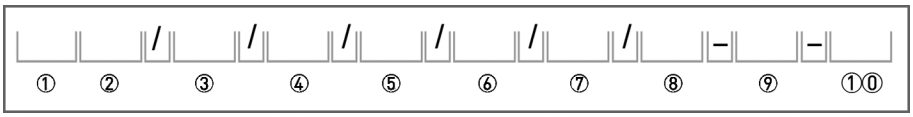

① Device type
H250 - standard version
H250H - horizontal flow direction
H250U - flow direction from top to bottom

② Materials / versions
RR - Stainless Steel
C - PTFE or PTFE/ceramics
HC - Hastelloy
Ti - Titanium
F - aseptic version (food)

③ Heating jacket version
B - with heating jacket

④ Series of indicators
M8 - Indicator M8
M9 - Indicator M9 standard indicator
M9S - Indicator with added impact and corrosion protection
M9R - Indicator in Stainless Steel housing
M10 - Indicator or signal converter M10

⑤ Design of indicator M8
MG - Mechanical indicator
EG - Electronic indicator with signal output 4...20 mA

⑥ High-temperature version
HT - Version with HT extension

⑦ Electrical signal output
ESK - Current output or Profibus-PA
ESK-Z - Current output and totalizer

⑧ Limit switch
K1 - One limit switch
K2 - Two limit switches
S1 - One SIL2 Limit switch acc. to IEC 61508
S2 - Two SIL2 Limit switches acc. to IEC 61508

⑨ Explosion protection
Ex - Explosion-protected equipment

①⓪ SIL
SK - SIL2 compliance of limit switches acc. to IEC 61508

* positions which are not needed are omitted (no blank positions)

3.1 General notes on installation

INFORMATION!
Inspect the packaging carefully for damages or signs of rough handling. Report damage to the carrier and to the local office of the manufacturer.

INFORMATION!
Do a check of the packing list to make sure that you have all the elements given in the order.

INFORMATION!
Look at the device nameplate to ensure that the device is delivered according to your order. Check for the correct supply voltage printed on the nameplate.

3.2 Storage

- Store the device in a dry and dust-free location.
- Avoid lasting direct exposure to the sun.
- Store the device in its original packing.
- The permissible storage temperature for standard devices is -40...+80°C / -40...+176°F.

3.3 Installation conditions

CAUTION!
When installing the device in the piping, the following points must be observed:

- *The variable area flowmeter must be installed vertically (measuring principle). Flow direction from bottom to top. For installation recommendations please refer also to VDI/VDE 3513 Sheet 3.*

  H250Hs are installed horizontally and H250U devices are installed vertically with the flow direction from top to bottom.
- *A straight unimpeded inlet run of ≥ 5x DN upstream of the device and a straight outlet run of ≥ 3x DN downstream of the device are recommended.*
- *Screws, bolts and gaskets are to be provided by the customer and must be selected in accordance with the pressure rating of the connection or the operating pressure.*
- *The inside diameter of the flange deviates from the standard dimensions. Flange seal standard DIN 2690 can be applied without any limitation.*
- *Align the gaskets. Tighten the nuts with the tightening torques of the appropriate pressure rating.*

  For devices with PTFE liner or ceramic liner and PTFE raised faces, see chapter "Tightening torques".
- *Control devices are to be positioned downstream of the measuring device.*
- *Shutoff devices are preferably to be positioned upstream of the measuring device.*
- *Before connecting, blow or flush out the pipes leading to the device.*
- *Pipes for gas flow need to be dried before the device is installed.*
- *Use connectors suitable for the particular device version.*
- *Align the pipes axially with the connections on the measuring device so they are free of stresses.*
- *If necessary, the piping has to be supported to prevent vibrations being transmitted to the measuring device.*
- *Do not lay signal cables directly next to cables for the power supply.*

Minimum distance between these divices

If several instruments are installed side by side, a minimum distance a > 300mm between these divices is required.

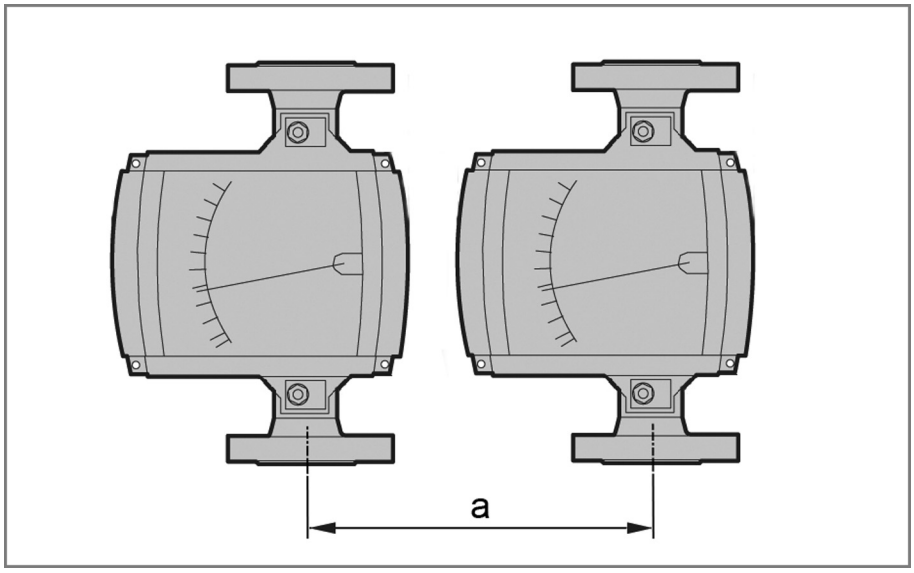

Take special note of the installation position for the H250H with horizontal flow direction:

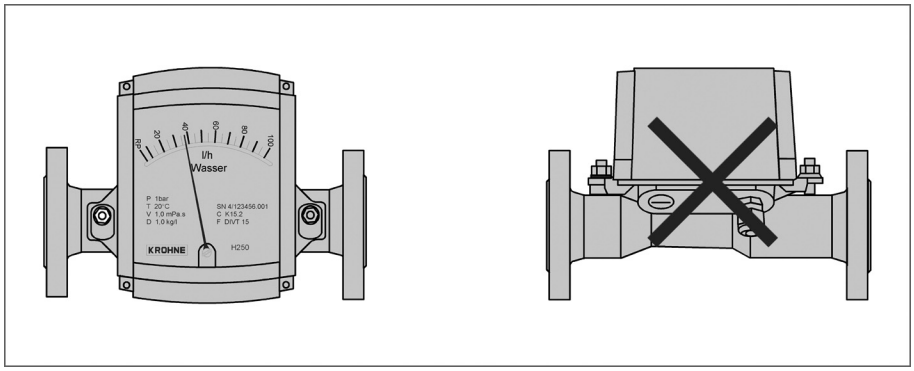

In order to comply with thermal parameters and measuring accuracy, H250H flowmeters for horizontal installation are to be installed in the pipeline so that the display is located on the side of the measuring tube. The maximum medium and ambient temperatures indicated as well as the measuring accuracy are based on lateral installation of the display.

3.3.1 Tightening torques

For measuring devices with PTFE liner or ceramic liner and PTFE raised face, tighten the flange threads with the following torques:

Nominal size according to				Stud bolts			Max. torque			
EN 1092-1		ASME B 16.5		EN	ASME		EN 1092-1		ASME 150 lb	
DN	PN	Inch	lb		150 lb	300 lb	Nm	ft*lbf	Nm	ft*lbf
15	40	½“	150/300	4x M12	4x ½“	4x ½“	9.8	7.1	5.2	3.8
25	40	1“	150/300	4x M12	4x ½“	4x 5/8“	21	15	10	7.2
50	40	2“	150/300	4x M16	4x 5/8“	8x 5/8“	57	41	41	30
80	16	3“	150/300	8x M16	4x 5/8“	8x ¾“	47	34	70	51
100	16	4“	150/300	8x M16	8x 5/8“	8x ¾“	67	48	50	36

3.3.2 Magnetic filters

The use of magnetic filters is recommended when the medium contains particles which can be influenced magnetically. The magnetic filter is to be installed in the flow direction upstream of the flowmeter. Bar magnets are positioned helically in the filter to provide optimal efficiency at low pressure loss. All of the magnets are coated individually with PTFE to protect against corrosion. Material: 1.4404/316L

Magnetic filters

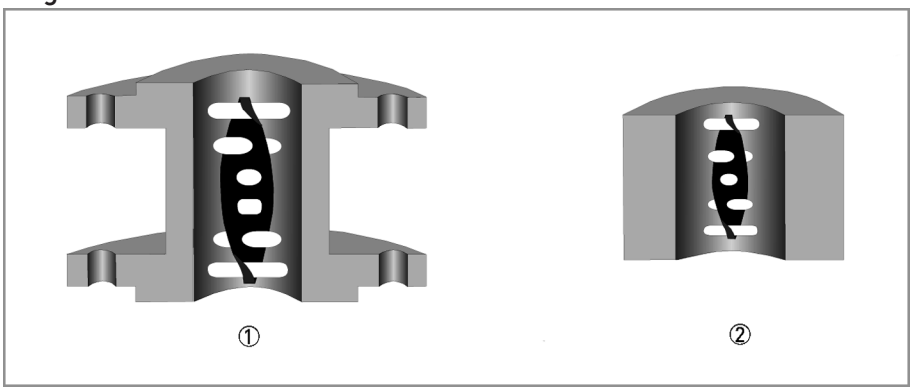

① Type F - fitting part with flange - overall length 100 mm / 4"
② Type FS - fitting part without flange - overall length 50 mm / 2"

3.3.3 Heat insulation

CAUTION!
The indicator housing may not be heat-insulated.
The heat insulation ③ may only reach as far as the housing fastening ④.

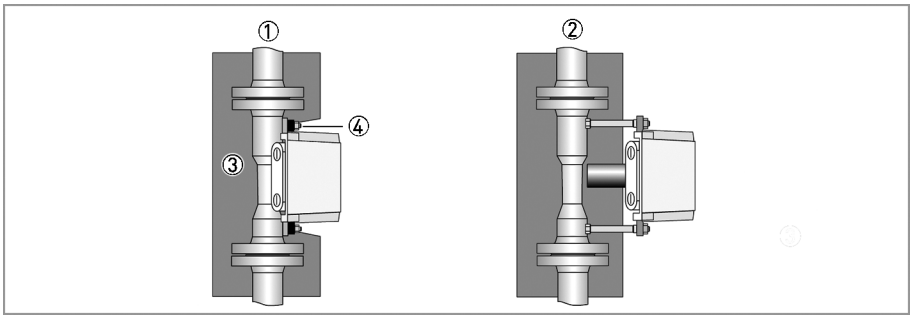

Figure 3-1: H250 heat insulation

① Standard indicator M9
② Indicator with HT extension

This applies in the same manner to indicators M8 and M10.

CAUTION!
The heat insulation ① may only reach to the rear of the housing ②. The area of the cable entries ③ must be freely accessible.

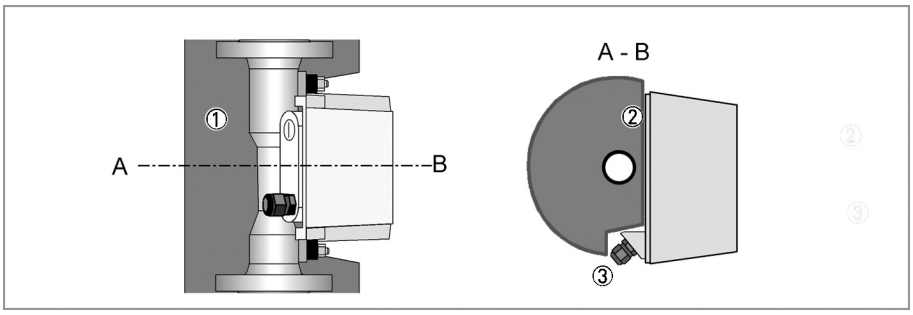

Figure 3-2: Insulation - cross section

4.1 Safety instructions

DANGER!
All work on the electrical connections may only be carried out with the power disconnected. Take note of the voltage data on the nameplate!

DANGER!
Observe the national regulations for electrical installations!

DANGER!
For devices used in hazardous areas, additional safety notes apply; please refer to the Ex documentation.

WARNING!
Observe without fail the local occupational health and safety regulations. Any work done on the electrical components of the measuring device may only be carried out by properly trained specialists.

INFORMATION!
Look at the device nameplate to ensure that the device is delivered according to your order. Check for the correct supply voltage printed on the nameplate.

4.2 Electrical connection indicator M8

4.2.1 Indicator M8M - limit switches

The limit switches can be set over the entire measuring range using the limit pointer ①. The set limit values are displayed on the scale. The pointers are set to the desired limit values using a slip coupling along the scale.

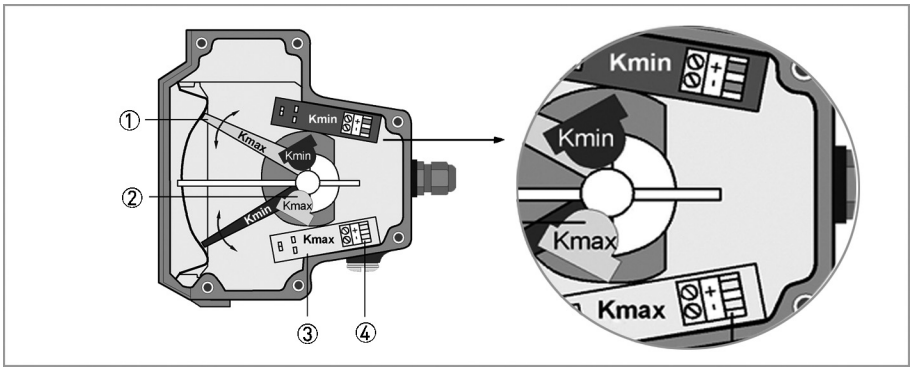

Figure 4-1: Limit switch settings M8MG

① Maximum pointer, switching point indicator
② Limit switch
③ Connection board
④ Connection terminal

4.2.2 Indicator M8E - current output

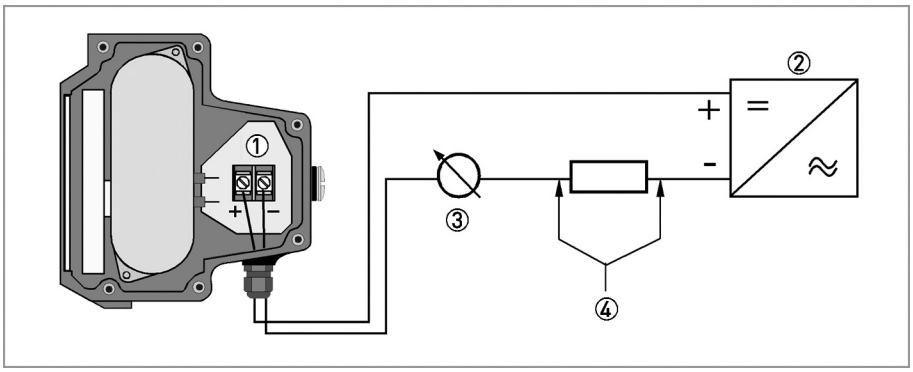

Figure 4-2: Electrical connection M8EG

① Terminal connection
② Power supply 14.8...30 VDC
③ Measuring signal 4...20 mA
④ External load, HART® communication

Power supply M8 with electrical isolation

The circuitry for connection to other devices such as digital evaluator units or process control equipment must be designed with especial care. In some circumstances internal connections in these devices (e.g. GND with PE, ground loops) may lead to impermissible voltage potentials, which can compromise the function of the device itself or a connected device. In such cases a protected extra-low voltage (PELV) is recommended.

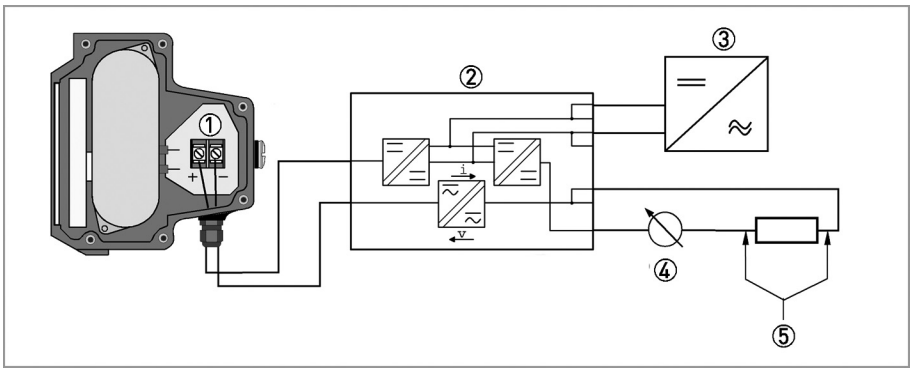

Figure 4-3: Electrical connection M8EG with electrical isolation

① Terminal connection
② Converter supply isolator with electrical isolation
③ Power supply (see supply isolator information)
④ Measuring signal 4...20 mA
⑤ External load, HART® communication

Power supply

INFORMATION!
The supply voltage has to be between 14.8 VDC and 30 VDC. This is based on the total resistance of the measuring loop. To determine this, add up the resistances of each component in the measuring loop (not including the device).

The required supply voltage can be calculated using the formula below:

$U_{ext.} = R_L \cdot 22\ mA + 14.8\ V$

where
$U_{ext.}$ = the minimum supply voltage and
R_L = the total measuring loop resistance is.

INFORMATION!
The power supply has to be able to supply a minimum of 22 mA.

HART® communication

When HART® communication is carried out with the M8E display, the analogue measured data transmission (4...20 mA) is not impaired in any way.

Exception for multidrop mode. In multidrop mode, a maximum of 15 devices with HART® function can be operated in parallel, whereby their current outputs are switched inactive (I approx. 4 mA per device).

Load for HART® communication

INFORMATION!

For HART® communication a load of at least 230 ohm is required.

The maximum load resistance is calculated as follows:

$$R_L = \frac{U_{ext.} - 14{,}8V}{22\,mA}$$

DANGER!

Use a twisted two-core cable to prevent electrical interference from impeding the DC output signal.

In some cases a shielded cable may be necessary. The cable shield may only be earthed (grounded) at one place (on the power supply unit).

Configuration

The M8E electronic indicator can be configured via HART® communication. DD (Device Descriptions) for AMS 6.x and PDM 5.2 as well as a DTM (Device Type Manager) are available for configuration. They can be downloaded free of charge from our website.

The current flow rate can be transmitted using the integrated HART® communication. A flow counter can be configured. Two limit values can be set and monitored. The limit values are assigned either to flow values or to the counter overflow. The limit values are not depicted on the display.

4.3 Electrical connection indicator M9

For the electrical data of the built-in components refer to the chapter "Technical data".

4.3.1 Indicator M9 - limit switches

The M9 indicator can be equipped with a maximum of two electronic limit switches. The limit switch functions as a slot sensor which is operated inductively through the semicircular metal vane belonging to the measuring pointer. The switching points are set using the contact pointers. The position of the contact pointer is indicated on the scale.

Limit switch module

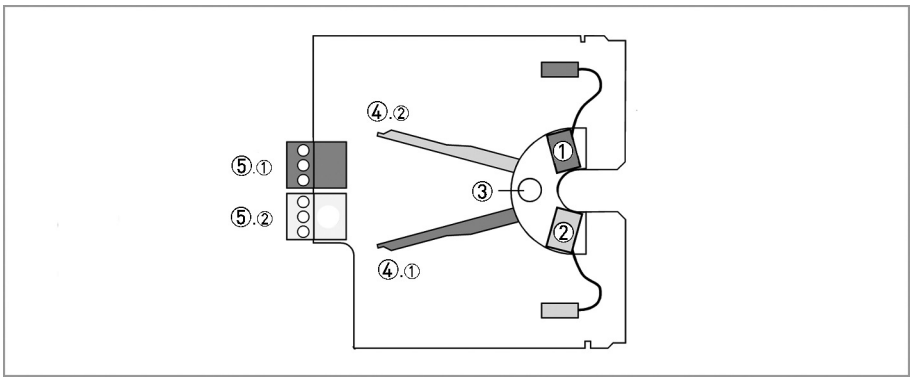

① Min. contact
② Max. contact
③ Locking screw
④ Maximum pointer
⑤ Connection terminal

The connecting terminals have a pluggable design and can be removed in order to connect the cables. The built-in limit switch types are shown on the indicator.

Electrical connection of the limit switches

Contact	MIN			MAX		
Terminal no.	1	2	3	4	5	6
Connection 2-wire NAMUR	-	+		-	+	
Connection 3-wire	+	⎍	-	+	⎍	-
Connection Reed SPST	+		-	+		-

Limit switch connection terminals

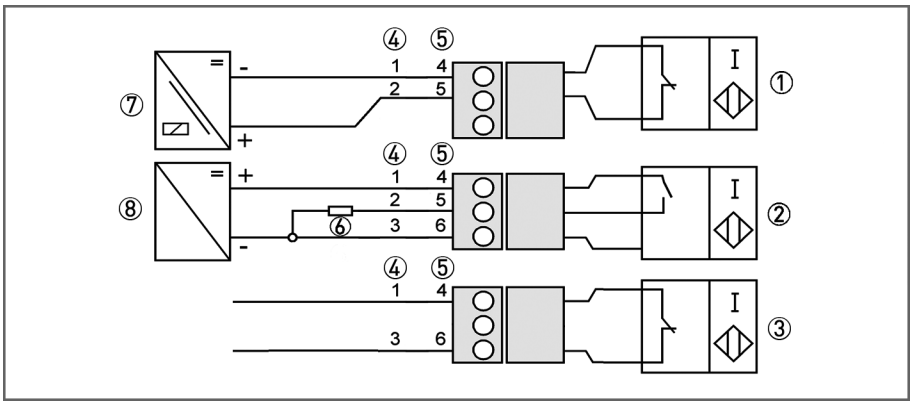

① 2-wire limit switch NAMUR
② 3-wire limit switch
③ Reed SPST Limit switch
④ Terminal connection min contact
⑤ Terminal connection max contact
⑥ 3-wire load
⑦ NAMUR isolated switching amplifier
⑧ 3-wire power supply

Limit setting

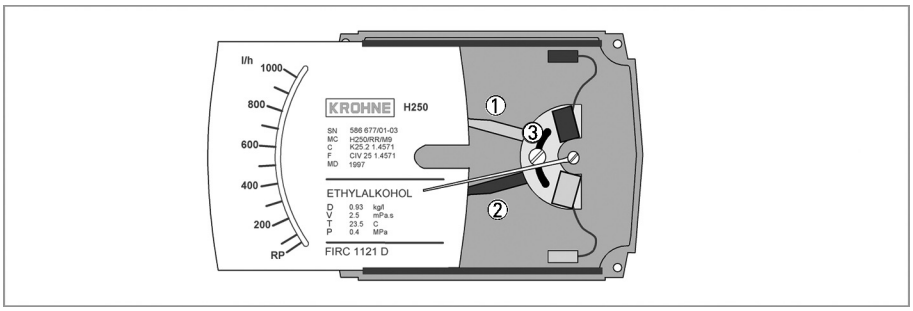

Figure 4-4: Limit switch settings

① Contact pointer MAX
② Contact pointer MIN
③ Locking screw

Setting is carried out directly via contact pointers ① and ②:

- Slide the scale away
- Loosen the locking screw ③ slightly
- Slide the scale back to the latching point
- Set contact pointers ① and ② to the desired switching point

After setting has been carried out: Fix the contact pointers with the locking screw ③.

Switch contact definition

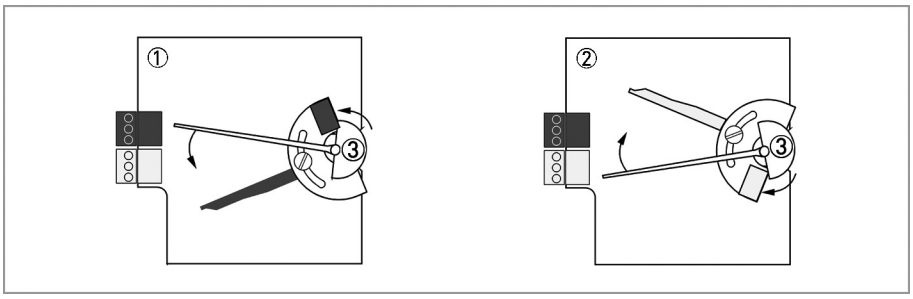

① MIN contact
② MAX contact
③ Pointer vane with switching vane

If the pointer vane enters the slot, an alarm is triggered. If the pointer vane lies outside the slot sensor, a wire break also causes the alarm to be triggered.

The 3-wire limit switch does not have any wire break detection.

Definition MinMin - MaxMax

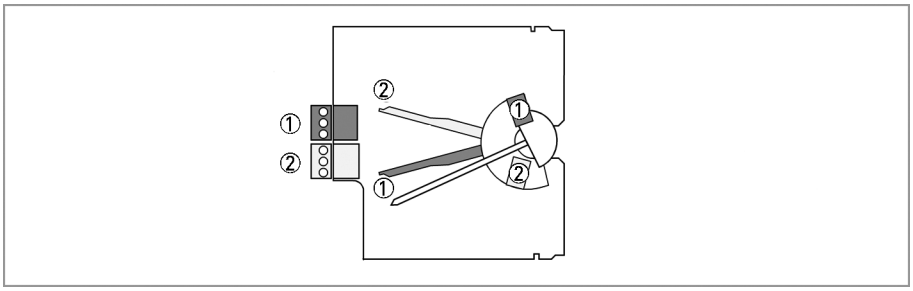

① MIN 2 contact or MAX 1 contact
② MIN 1 contact or MAX 2 contact

Current consumption in the position shown:

Contact	Type	current
MIN 1	NAMUR	≤ 1 mA
MIN 2	NAMUR	≤ 1 mA
MAX 1	NAMUR	≥ 3 mA
MAX 2	NAMUR	≥ 3 mA

4.3.2 Indicator M9 - current output ESK2A

The connecting terminals of the ESK2A have a pluggable design and can be removed in order to connect the cables.

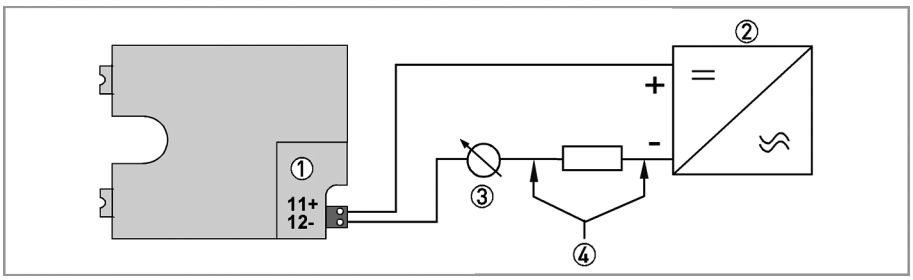

① ESK2A current transmitter
② Power supply 12...30 VDC
③ Measuring signal 4...20 mA
④ External load, HART® communication

Power supply M9 with electrical isolation

The circuitry for connection to other devices such as digital evaluator units or process control equipment must be designed with especial care. In some circumstances internal connections in these devices (e.g. GND with PE, ground loops) may lead to impermissible voltage potentials, which can compromise the function of the device itself or a connected device. In such cases a protected extra-low voltage (PELV) is recommended.

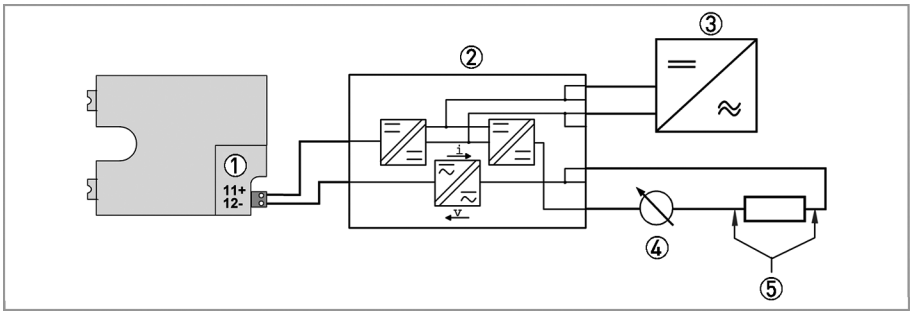

① Terminal connection
② Converter supply isolator with electrical isolation
③ Power supply (see supply isolator information)
④ Measuring signal 4...20 mA
⑤ External load, HART® communication

Power supply

INFORMATION!
The supply voltage has to be between 12 VDC and 30 VDC. This is based on the total resistance of the measuring loop. To determine this, add up the resistances of each component in the measuring loop (not including the device).

The required supply voltage can be calculated using the formula below:

$U_{ext.} = R_L \cdot 22\ mA + 12\ V$

where
$U_{ext.}$ = the minimum supply voltage and
R_L = the total measuring loop resistance is.

INFORMATION!
The power supply has to be able to supply a minimum of 22 mA.

HART® communication

When HART® communication is carried out with the ESK, the analogue measured data transmission (4...20 mA) is not impaired in any way.

Exception for multidrop mode. In multidrop mode, a maximum of 15 devices with HART® function can be operated in parallel, whereby their current outputs are switched inactive
(I approx. 4 mA per device).

Load for HART® communication

INFORMATION!

For HART® communication a load of at least 230 ohm is required.

The maximum load resistance is calculated as follows:

$$R_L = \frac{U_{ext.} - 12\,V}{22\,mA}$$

DANGER!

Use a twisted two-core cable to prevent electrical interference from impeding the DC output signal.

In some cases a shielded cable may be necessary. The cable shield may only be earthed (grounded) at one place (on the power supply unit).

Configuration

The ESK can be configured via HART® communication. DD (Device Descriptions) for AMS 6.x and PDM 5.2 as well as a DTM (Device Type Manager) are available for configuration. They can be downloaded free of charge from our website.

The current flow rate can be transmitted using the integrated HART® communication. A flow counter can be configured. Two limit values can be monitored. The limit values are assigned either to flow values or to the counter overflow.

Self monitoring - Diagnostics

During both start-up and operation, a wide variety of diagnostic functions are performed cyclically in the ESK2A, in order to guarantee function reliability. When an error is detected, a failure signal (high) is activated (current > 21 mA) via the analogue output. In addition, more detailed information can be requested via HART® (CMD#48). The failure signal is not activated for information and warnings.

Diagnostic functions (Monitoring):

- Plausibility of FRAM data
- Plausibility of ROM data
- Working range of internal reference voltages
- Signal detection of the measuring range of the internal sensors
- Temperature compensation of the internal sensors
- Calibration corresponding the application
- Plausibility of counting value
- Plausibility of physical unit, system and selected unit

4.3.3 Indicator M9 - Profibus PA (ESK3-PA)

Bus cable

Shielding and grounding

The statements of the FISCO model only apply if the bus cable used meets the required specifications. For specifications, see the chapter "Technical data" ESK3-PA.

In order to ensure optimum electromagnetic compatibility of systems it is important that the system components, and in particular the bus cables, are shielded. These shields must have as few gaps as possible.

Connection

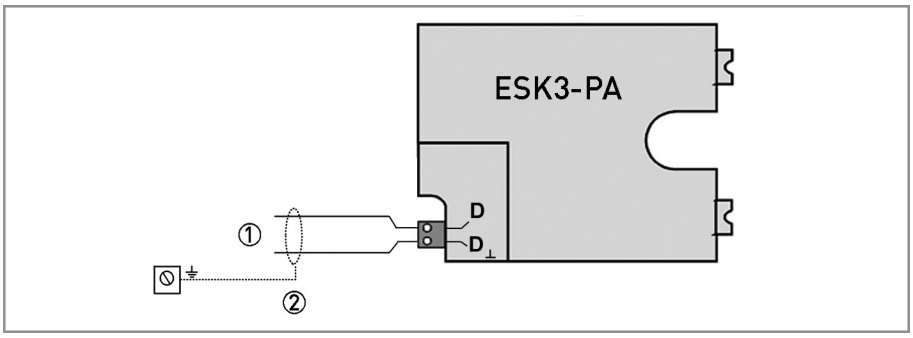

Figure 4-5: ESK3-PA connection

① Signal connection
② Shielding and grounding

Polarity reversal has no effect on the function. The cable shield should be connected with minimum length to the functional ground FE.

4.3.4 Indicator M9 - totalizer (ESK-Z)

The totalizer only works in conjunction with the ESK2A current output. A 6-digit display shows the totalised flow value. It can be changed over to the instantaneous flow value in 0...100%.

A data backup is carried out automatically in the event of a power failure.

The counter is factory-set to the measuring range of the indicator. The total value can be read directly.

Supply 11/12 and measured signals S+ and S- are not electrically isolated.
If the measured signal is not needed externally, a short-circuit jumper has to be connected to terminals S+ and S-.

Pulse outputs P+ and P- are electrically isolated. A pulse is generated for each counter advance.
If the pulse output is not required, its terminals can remain unused.

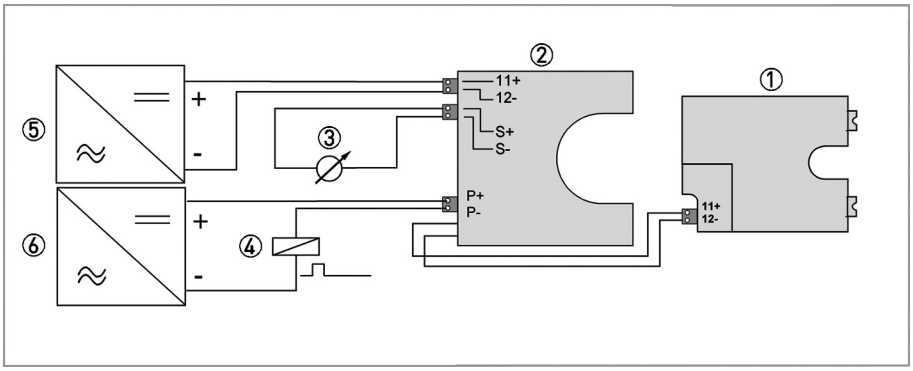

Figure 4-6: Counter connection

① ESK - measurement signal 4...20 mA
② Counter module
③ Transfer of the measurement signal or short-circuit jumper
④ Pulse output load
⑤ Counter power supply
⑥ Pulse output power supply

A functional extra-low voltage with protective electrical isolation (PELV) in accordance with VDE 0100 Part 410 is required as a power supply. All the instruments (recorder, display, etc.) connected to measuring circuits S+ and S- are connected in series. If this measuring circuit is not needed, then a short-circuit jumper ③ required.

Settings - display modes

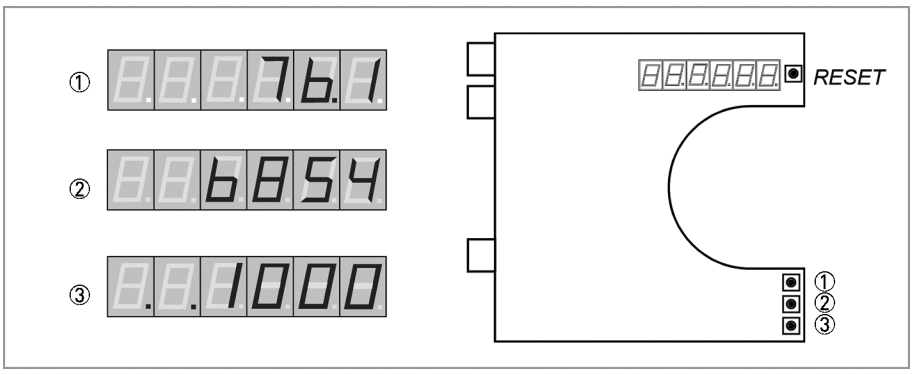

Figure 4-7: Counter display modes

① Flow rate as % display
② Flow totalizer display
③ Conversion factor display

The RESET button deletes only the actual totalizer value.

Settings by pressing a button at the moment of switch-on

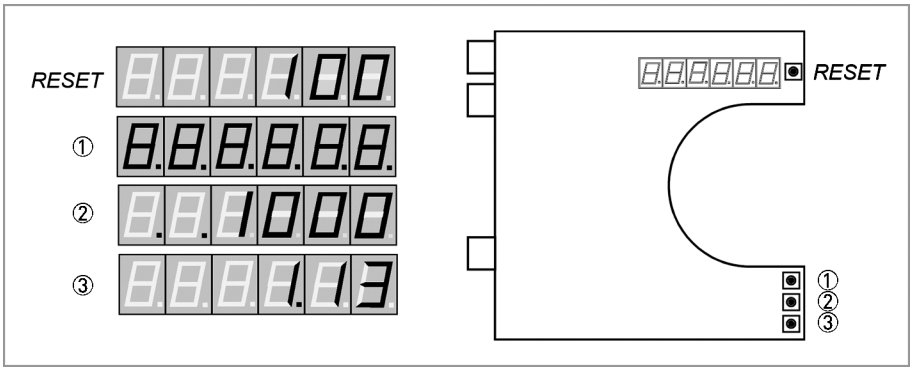

Figure 4-8: Settings of the counter at the moment of switch-on

RESET button - mA calibration
Button ① - Display test
Button ② - Changing the conversion factor
Button ③ - Software hardware version (information)

Conversion factor

The conversion factor is always 10% of the full-scale range.
If the measuring range is not know, the conversion factor is factory-set to 1000.

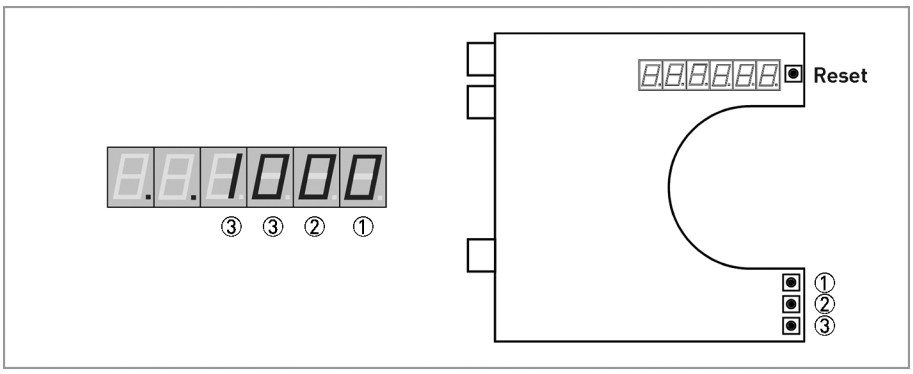

Figure 4-9: Changing the conversion factor

① Units position
② Tens position
③ Hundreds and 1000s position

Exit the setting by pressing the RESET button
The largest factor that can be set is 1099.
Factors with decimal values are not possible.

Counter overflow

Figure 4-10: Depiction of counter overflow

A counter overflow is signaled by all the decimal points lighting up.
Reset by pressing the RESET button.

Current input calibration

During the switching-on process keep the RESET button pressed until three decimal points light up.

- Set 4.00 mA
- Keep button ① pressed until the number 0 is displayed
- Set 20.00 mA
- Keep button ③ pressed until the number 100 is displayed
- Exit calibration by pressing button ②

4.4 Electrical connection indicator M10

For the electrical data of the M10 indicator refer to chapter "Technical data".

4.4.1 Indicator M10

The display can be removed after the housing lid has been unscrewed. The connection terminals have a spring locking system.

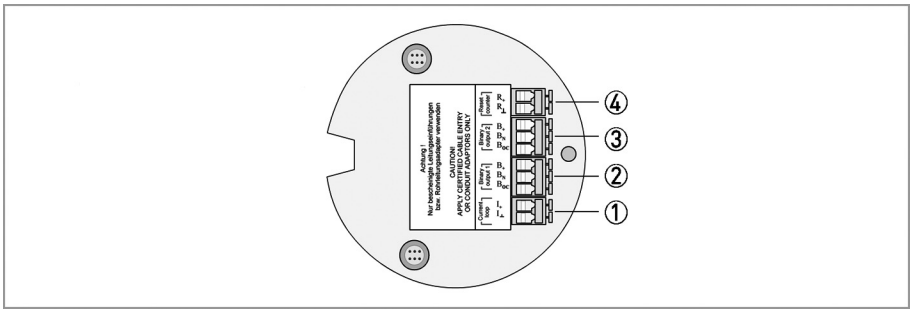

Figure 4-11: Indicator M10 terminal connection

① Power supply - analog output
② Switching output B1
③ Switching output B2 or pulse output
④ Reset input R

4.4.2 Power supply - current output

The electrical connection is reverse-polarity protected.

M10 - terminal connection I

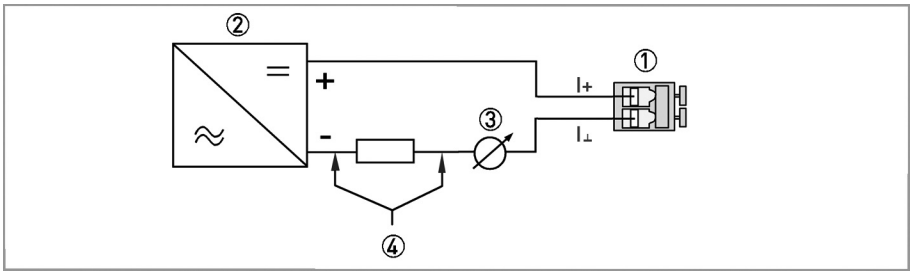

① Terminal connection
② Power supply 16...32V DC
③ Measuring signal 4...20 mA
④ External load, HART® communication

Power supply M10 with electrical isolation

The circuitry to other devices must be designed with special care. In some circumstances, internal connections in these devices (e.g. GND with PE, ground loops) may lead to impermissible voltage potentials, which can compromise the function of the device itself or a connected device. In such cases a protected extra-low voltage (PELV) is recommended.

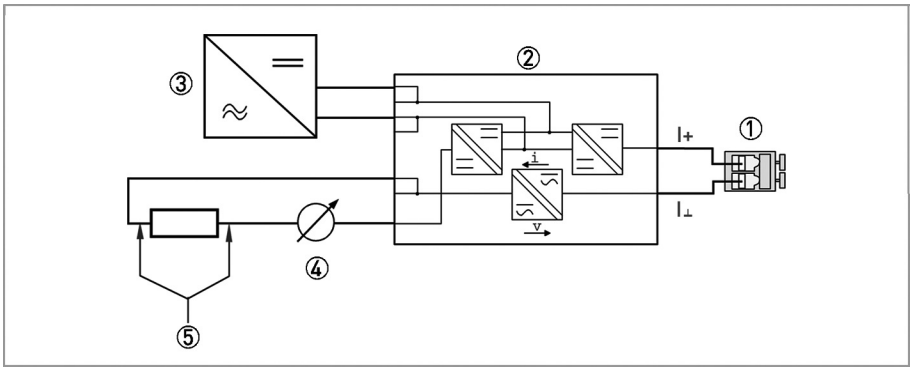

① Terminal connection
② Converter supply isolator with electrical isolation
③ Power supply (see supply isolator information)
④ Measuring signal 4...20 mA
⑤ External load, HART® communication

Power supply

INFORMATION!
The supply voltage has to be between 16 VDC and 32 VDC. This is based on the total resistance of the measuring loop. To determine this, add up the resistances of each component in the measuring loop (not including the device).

The required supply voltage can be calculated using the formula below:

$U_{ext.} = R_L \cdot 22\ mA + 16\ V$

where
$U_{ext.}$ = the minimum supply voltage and
R_L = the total measuring loop resistance is.

INFORMATION!
The power supply has to be able to supply a minimum of 22 mA.

HART® communication

When HART® communication is carried out with the M10, this will not in any way impair analogue measured data transmission (4...20 mA).

Exception for multidrop operation. In multidrop operation, a maximum of 15 devices with HART® function can be operated in parallel, for which the current outputs are switched to inactive.

Load for HART® communication

INFORMATION!

For HART® communication a load of at least 230 ohm is required.

The maximum load resistance is calculated as follows:

$$R_L = \frac{U_{ext.} - 16\,V}{22\,mA}$$

DANGER!

Use a twisted two-core cable to prevent electrical interference from impeding the DC output signal.

In some cases a shielded cable may be necessary. The cable shield may only be earthed (grounded) at one place (on the power supply unit).

Configuration

The M10 electronic indicator can be configured via HART® communication. DD (Device Descriptions) for AMS 6.x and PDM 5.2 as well as a DTM (Device Type Manager) are available for configuration. They can be downloaded free of charge from our website.

The current flow rate can be transmitted using the integrated HART® communication. The flow counter can be configured. Two limit values can be monitored. The limit values are assigned either to flow values or to the counter.

4.4.3 Switching outputs B1 and B2

The switching outputs are electrically isolated from each other and from the current output.

CAUTION!
The switching outputs can only be operating if the power supply is applied to terminals I+ and I-.

Switching outputs B1 and B2 can be electrically connected in two ways:

- NAMUR switching output - Ri approx. 1 kOhm
- OC - (open collector) low-resistance switching output with PNP technology

M10 - switching outputs

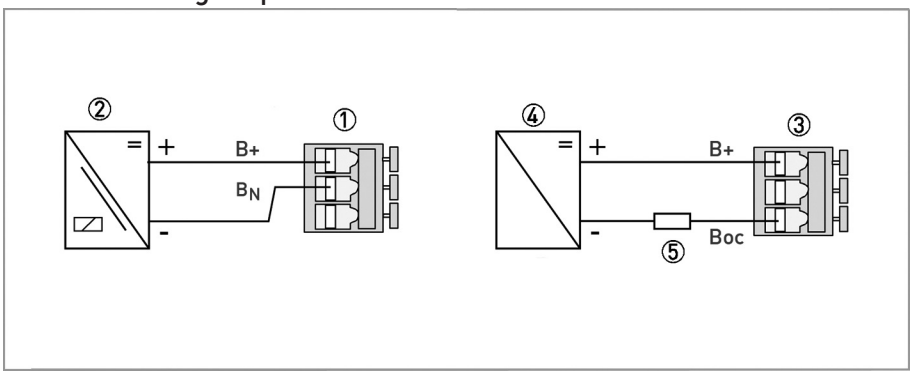

① NAMUR terminal connection
② Isolation switching amplifier
③ Transistor OC terminal connection
④ Power supply $U_{ext.}$
⑤ Load R_L

Value range NAMUR

	Normally closed	Normally open
Switching value reached	≤1 mA	> 3 mA
Switching value not reached	> 3 mA	≤1 mA

Switching capacity of B1 and B2 with PNP technology

Due to the PNP technology and the associated protective elements, there is a voltage drop Uv for the load to be operated.

Switching capacity of B1 and B2

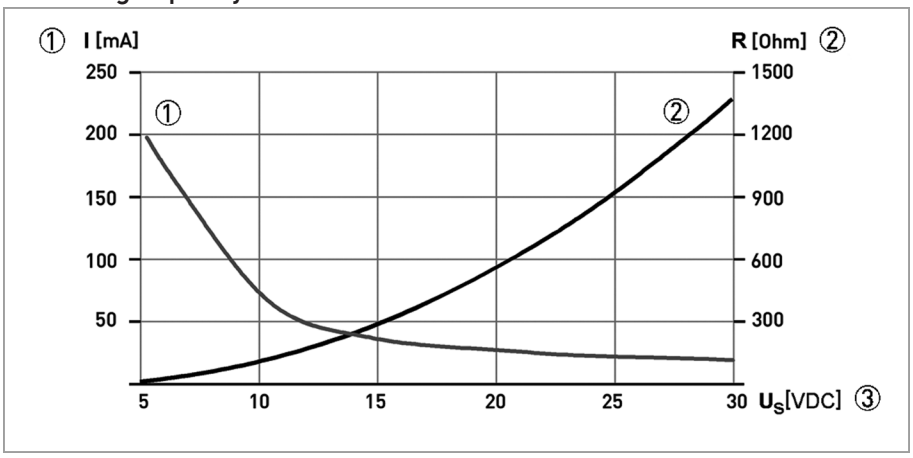

① Max. switching current I [mA]
② Minimum load impedance R_L [Ohm]
③ Power supply $U_{ext.}$

Power loss of B1 and B2

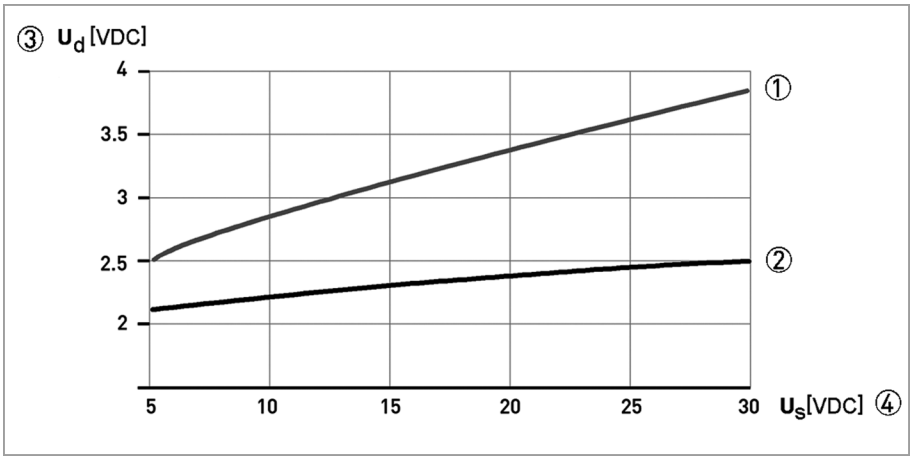

① Load impedance R_L 100 Ohm
② Load impedance R_L 1000 Ohm
③ Power loss U_d
④ Power supply $U_{ext.}$

4.4.4 Switching output B2 as a pulse output

INFORMATION!
When switching output B2 is used as a pulse output, two separate signal circuits are required.
Each signal circuit requires its own power supply.
The total resistance ③ must be adapted so that the total current I_{tot} does not exceed 100 mA.

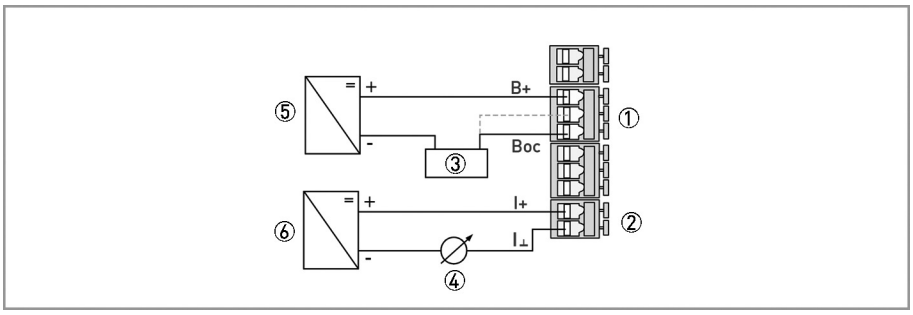

Figure 4-12: Electrical pulse output

① Terminal B2
② Terminal I
③ Load e.g. counter
④ Flow rate measurement 4...20 mA
⑤ Pulse output power supply
⑥ M10 power supply

Pulse output B2 is a passive "open collector" output which is electrically isolated from the current output and output B1. It can be operated as a low-resistance output or as a NAMUR output.

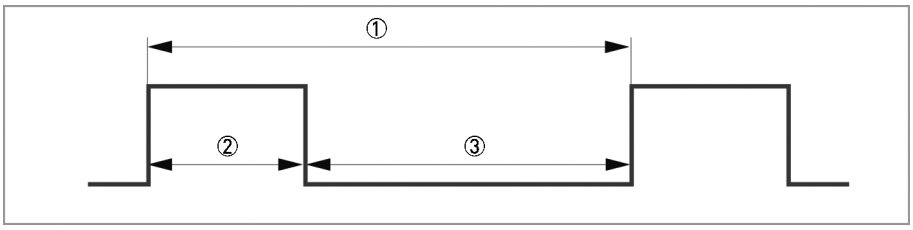

Figure 4-13: Data pulse output

① f_{max} = 10 Hz
② t_{on}
③ t_{off}

The pulse width t_{on} can be configured from 30...500 ms in the menu of the indicator.

4.4.5 Connection reset input R

Input R can be used as a reset input for the internal counter.

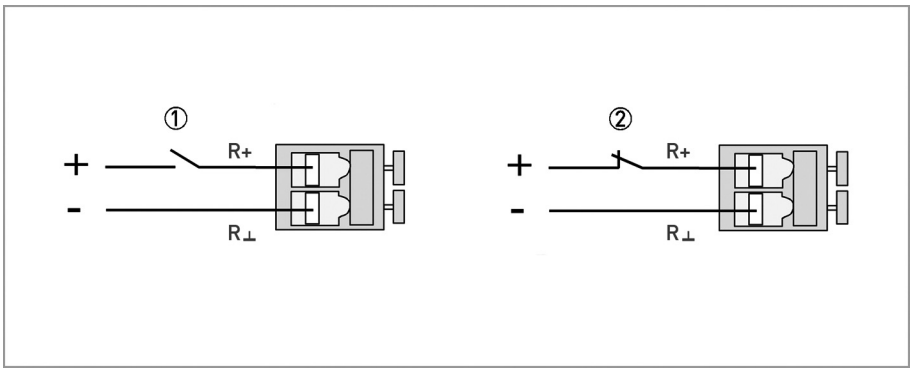

Figure 4-14: Indicator M10 - reset input

① Function active HI
② Function active LO

This reset input can be activated in the menu of indicator M10, and can be configured to ACTIVE HI or ACTIVE LO. See also chapter "Indicator M10 menu explanations".

If the input is set as ACTIVE LO, an interruption causes the counter to be reset.

4.5 Grounding connections

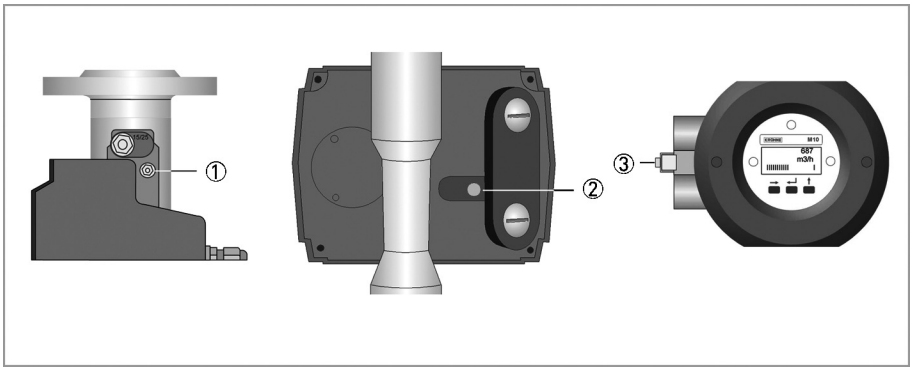

Figure 4-15: Ground connections

① Indicator M8
② Indicator M9
③ Indicator M10

DANGER!
The grounding wire may not transfer any interference voltage.
Do not use this grounding wire to ground any other items of electrical equipment.

4.6 Protection category

The measuring device meets all requirements of protection category IP

Indicator	Protection category
M9	IP65/67
M8	IP65
M10	IP66/67

DANGER!
After all servicing and maintenance work on the device, the specified protection category has to be ensured again.

Therefore it is essential to observe the following points:

- Use only original gaskets. They must be clean and free of any damage. Defective gaskets have to be replaced.
- The electrical cables used must be undamaged and must comply with regulations.
- The cables must be laid with a loop ③ upstream of the measuring device to prevent water from getting into the housing.
- The cable glands ② must be tightened.
- Close the unused cable glands using blanking plugs ①.

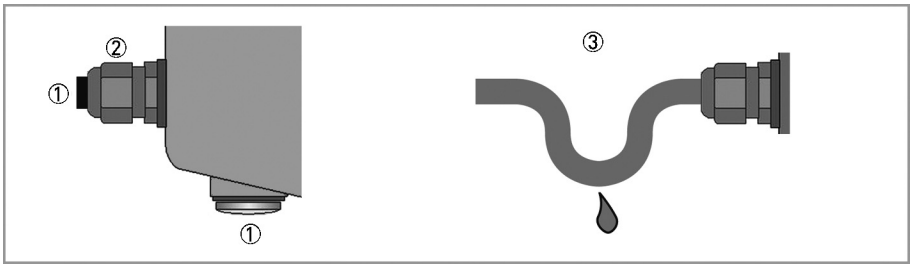

Figure 4-16: Cable gland

① Use blanking plugs if no cable is routed through
② Tighten cable gland firmly
③ Lay the cable in a loop

5.1 Standard device

CAUTION!
When starting up the device, the following points must be observed:

- *Compare the actual operating pressure and the product temperature of the system with the specifications on the nameplate (PS and TS). These specifications may not be exceeded.*
- *Make sure materials are compatible.*
- *Slowly open the shut-off valve.*
- *When measuring liquids, vent the pipes carefully.*
- *When measuring gases, increase pressure slowly.*
- *Avoid float impact (e.g. caused by solenoid valves), as this is likely to damage the measuring unit or float.*

A minimum operating pressure (primary pressure) is necessary to operate the device:

Medium	Pressure loss : operating pressure
Liquids	1 : 2
Gases without float damping	1 : 5
Gases with float damping	1 : 2

5.2 Indicator M10

INFORMATION!
The device is always preset for the user and his application.

Start
After the device is switched on, the display shows the following in sequence

- "Test",
- the device type and
- the version number.

Afterwards the device performs a self-test and switches to measurement mode. Here all of the parameters preset for the customer are analysed and checked for plausibility, and the current measured value is displayed.

Operation

INFORMATION!
The device is low-maintenance
Comply with the application limits with regard to temperature of the medium and ambient temperature.

6.1 Operating elements indicator M10

Operation of the device is performed with the cover on the front open, using the mechanical **keys**, or with the cover closed using a **bar magnet**.

CAUTION!
The switching point of the magnetic sensors is right at the level of the corresponding circle. Only touch the circle vertically and from the front using the bar magnet. Touching it from the side may cause a malfunction.

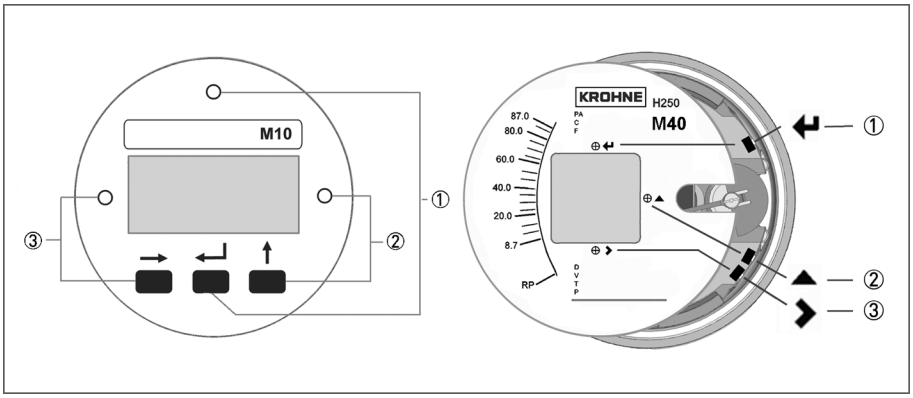

Figure 6-1: Display and operating elements

① Enter button (circuit for bar magnet)
② Up button (circuit for bar magnet)
③ Right button (circuit for bar magnet)

The mechanical keys and keys for the bar magnet are identical in their function. In this documentation the keys are represented as symbols to describe the operating functions:

	Key	Symbol
①	Enter	↵
②	up	↑
③	right	→

Table 6-1: M10 operation keys

6.2 Basic principles of operation

6.2.1 Functional description of the keys

→	Switch from measurement mode to menu mode
	Switch to one menu level lower
	Open menu item and activate change mode
	In change mode: Move the input cursor one position to the right; after the last digit the input cursor jumps back to the beginning.
↑	**In measuring mode:** Switch between measured values and error messages
	Change between the menu items within a menu level
	In change mode: Changing parameters and settings; running through the available characters; shifting the decimal point to the right.
↵	Change one level up at the menu
	Return to measuring mode with a query whether the data should be accepted

Table 6-2: Description of the opperation buttons

6.2.2 Navigation within the menu structure

Navigation within the menu is by means of the → and ↵ buttons. Pressing button → takes you one menu level lower, ↵ takes you one menu level higher.

If you are already located at the lowest level (function level), you can use the button → to go the the change mode, which can be used to set data and values.

If you are located at the first level (main menu), you can use the ↵ key to exit the menu mode and return to the measuring mode.

Measuring operation	→	Main menu ↑	→	Sub-menu ↑	→	Function ↑	→	Edit → ↑ ↵
	↵		↵		↵		↵	

Table 6-3: Navigation menu structure

6.2.3 Changing the settings in the menu

Starting operation
Operation is started using the key →.

If a different key is pressed, it is necessary to wait 5 seconds before activating the key →.

If an operation inhibit has been set, the code → → → ↵ ↵ ↵ ↑ ↑ ↑ has to be entered. If no key is pressed within 5 seconds, code input is exited.

Exiting operator input
Operation is exited by pressing the ↵ key several times.

If data have been changed:

Save Yes	→	Changes are accepted. An update is carried out and the indicator jumps back to measuring operation.
Save No	↵	Changes are discarded and the indicator jumps back to measuring operation.

CAUTION!
Each time parameters or settings are changed, the measuring device carries out an internal plausibility check.
If implausible inputs have been made, the indicator remains in the current menu, and the changes are not accepted.

Example: Changing the default parameter from m^3/h to l/h

	Display			Display
Example:	7.2 m^3/h		1x →	Fct. 3.13.**1** FLOW RATE
1x →	Fct. **1**.0 OPERATION		1x →	10,0000 m^3/h
2x ↑	Fct. **3**.0 INSTALLATION		6x ↑	10000 l/h
1x →	Fct 3.**1** LANGUAGE		1x ↵	Quit Yes
12x ↑	Fct 3.**13** END&UNIT		3x ↵	7200 L/h

6.2.4 Measures in the event of faulty indications

If the indications on the display or the responses to keypad commands are faulty, you have to do a hardware reset. Switch the power supply OFF and ON again.

6.3 Overview of the most important functions and indicators

INFORMATION!
For a complete list of all functions and short descriptions refer to Menu explanations on page 52. All default parameters and settings are adapted for the specific customer.

Level	Designation	Explanation
1.4	TIME CONST.	Time constant, damping value [s]
1.5.2	ERROR	Error indicator Yes: Error messages are deleted No: Error messages are suppressed.
2.1	4-20mA OUT	Check current output
2.2 -2.4	OUTPUT B	Check switching outputs and RESET input
3.1	LANGUAGE	Select the menu language
3.13.1	FLOW RATE	Maximum flow rate The value set is represented by a 20 mA analogue current output. If the current value exceeds the preset value, an alarm is indicated.

Table 6-4: The most important functions

M10 flow units

Measured variables	Units				Measured products
Volume	m^3/s	m^3/min	m^3/h	m^3/d	Liquids, vapours, gases
	L/s	L/min	L/h	-	
	ft^3/s	ft^3/min	ft^3/h	ft^3/d	
	gal/s	gal/min	gal/h	gal/d	
	bb/s	bb/min	bb/h	bb/d	
	ImpGal/s	ImpGal/min	ImpGal/h	ImpGal/d	
Mass	g/s	g/min	g/h	-	Liquids, vapours, gases
	kg/s	kg/min	kg/h	kg/d	
	-	t/min	t/h	t/d	
	lb/s	lb/min	lb/h	-	
	-	short t/min	short t/h	short t/d	
	-	-	long t/h	long t/d	

6.4 Error messages indicator M10

Error message	Description	Category	Remedy
NOT LINEARIZED	Linearization faulty or not activated = measuring error	Error	Activate linearization or carry it out again (HART® communication and linearization software are required; the original calibration values must be known), or send the device back to the manufacturer for linearization.
NEW LINEARI. TABLE BAD	Faulty or missing data in the linearization table = measuring error		
LINEARIZATIO UNDER CONFIG	The device is in linearization mode = measuring error	Error	Complete the linearization and activate it (HART® communication and linearization software are required), or send the device back to the manufacturer for linearization.
UNIT SYSTEM CONFLICT	The unit for the linearization flow is incompatible with the selected flow type (mass/volume)	Error	Correct error, carry out linearization again if necessary (HART® communication and linearization software are required), or send the device back to the manufacturer for linearization.
TOO FEW ENTRIES	The linearization table has too few data points	Error	Carry out linearization at at least 5 points (HART® communication and linearization software are required), or send the device back to the manufacturer for linearization.
NOT MONOTONOUS	The sequence of the linearization values is not strictly monotonic increasing	Error	Check linearization and/or carry it out again (HART® communication and linearization software are required), or send the device back to the manufacturer for linearization.
FIRST NOT 0 %	The first flow value if the linearization table is not 0%		
LAST NOT 100 %	The last flow value if the linearization table is not 100%		
NO ZERO CAL OF AO	The current output zero point 4.00 mA is not calibrated = poss. measuring error in the process control system	Warning	Perform calibration using ammeter and menu 3.10 or using standard HART® tools/process control system and poss. external ammeter. Caution: during the calibration, switch the measuring point to manual control.
NO F.SC. CAL OF AO	The current output 100% = 20.00 mA is not calibrated = poss. measuring error in the process control system	Warning	Perform calibration using ammeter and menu item 3.11 or using standard HART® tools and external ammeter if necessary. Caution: during calibration, switch the measuring point to manual control.
NO TEMP. COMPENSATION	The sensor temperature compensation of the device is faulty or was not carried out. = possible measuring error	Error	The device, together with an indication of the error, must be sent back to the manufacturer for checking.
OUTPUT NOT LINEARIZED	Linearization is not activated = measuring error	Error	Activate linearization or carry it out again (HART® communication and linearization software are required; the original calibration values must be known), or send the device back to the manufacturer for linearization.
COUNTER LOST	Totalizer value was reset by error/overflow	Warning	Because the reset time is not known: Controlled reset of the counter using menu item 1.5.1 or using HART® tools/process control system.

FRAM WRITE FAULT	Internal communication error	Error	Check whether the display is plugged in correctly and restart the device. If the error occurs again: send the device back to the manufacturer with an indication of the error.
ROM/FLASH ERROR	Memory error detected during self-test.	Error	Restart the device. If the error occurs again: send the device back to the manufacturer with an indication of the error.
RESTART OF DEVICE	A device restart has taken place	Information	The device has been restarted using menu item 1.5.2 since the last time the error messages were reset.
MULTIDROP MODE	The HART® multidrop mode is activated. The current output is set to a fixed value of 4.5 mA.	Information	The HART®- multidrop mode is activated by selecting a polling address not equal to 0 using menu item 3.9. A polling address of 0 reactivates the current output.
CRYSTAL OSC FAULT	Internal error in device	Error	The device must be sent back to the manufacturer with an indication of the error.
REF VOLTAGE FAULT	Internal error in device		
SENSOR A FAULT	Internal error in device		
SENSOR B FAULT	Internal error in device		
MEMORY CORRUPTION	Internal memory error, caused by a hardware or software problem	Error	Restart the device; if the error occurs again the device must be sent back to the manufacturer with an indication of the error.
AO FIXED	The current output is set to a fixed value.	Information	The current output is fixed and does not reflect the measured value. This is the case in multidrop mode, with current output test/calibration using the menu or HART®
AO SATURATED	Current output saturated	Information	The current output is saturated at 20.4 or 22.0 mA (depending on whether the alarm current is activated or deactivated in menu item 3.12), and is no longer coupled with the measured value.

Device drivers for HART® tools, process control equipment (e.g. Siemens PDM or AMS) PACTware™ and HART® DTMs are available on the internet site.

6.5 Menu indicator M10

6.5.1 Factory settings

Menu	Function	Setting
1.1.1	Switching value B1	0.0
1.1.2	Hysteresis B1	0.0
1.2.1	Switching value B2	0.0
1.2.2	Hysteresis B2	0.0
1.3	Display	Flow rate
1.4	Time constant	3 s
1.5.1	Reset counter	NO
1.5.2	Reset error	NO
3.1	Language	DEUTSCH
3.2	Function B1	INACTIVE
3.3	Contact B1	NC contact
3.4	Function B2	INACTIVE
3.5	Contact B2	NC contact
3.6	Pulse duration	100ms
3.7	Pulse / unit	001 / liter
3.8	Function B3	INACTIVE
3.9	Multidrop polling address	0
3.12	Alarm current	OFF
3.13.1	Flow unit	see rating plate
3.13.2	Counter unit	Derived from the flow unit
3.14	LFC	4% ON 6% OFF
3.15	Input code	NO

INFORMATION!
The device has been set at the factory in accordance with the customer order.
Therefore subsequent configuration via the menu is only necessary if the intended use of the device is changed.

6.5.2 Menu structure

Menu	Submenu 1	Submenu 2
1 Operation	1.1 Output B1	1.1.1 Switching value B1
		1.1.2 Hysteresis B1
	1.2 Output B2	1.2.1 Switching value B2
		1.2.2 Hysteresis B2
	1.3 Display	
	1.4 Time constant	
	1.5 Reset	1.5.1 Reset counter
		1.5.2 Reset error
2 Test & Info	2.1 Output 4...20mA	
	2.2 Output B1	
	2.3 Output B2	
	2.4 Input B3	
	2.5 Serial no.	
	2.6 Software version	
	2.7 Tag no.	
3 Installation	3.1 Language	
	3.2 Function B1	
	3.3 Contact B1	
	3.4 Function B2	
	3.5 Contact B2	
	3.6 Pulse duration	
	3.7 Pulse/unit	
	3.8 Function B3	
	3.9 Multidrop	
	3.10 Calibration 4mA	
	3.11 Calibration 20mA	
	3.12 Alarm current	
	3.13 Upper range value and unit	3.13.1 Flow rate
		3.13.2 Counter
	3.14 Low Flow Cutoff LFC	3.14.1 Control
		3.14.2 Switch-on value
		3.14.3 Switch-off value
	3.15 Input code	
	3.16 Basic setting	

6.5.3 Menu explanations

Level	Designation	Selection / Input	Explanation
1.1.1	OUTPUT B1	INACTIVE	
		FLOW.VAL B1	Flow value switching point. The switching point is entered in flow units. If the current flow value exceeds this set switching point, then output B1 is activated. Note: The function NC or NO can be selected using menu 3.3.
		COUNTER.VAL B1	Counter value switching point. Each positive number can be set here. If the counter exceeds this value, then output B1 is activated. Note: The function NC or NO can be selected using menu 3.3.
1.1.2	OUTPUT B1	HYST.B1	Hysteresis setting for the flow value switching point. Value range 0...switching point. Example, if a switching value of 200 is set under 1.1.1, then a hysteresis value of 0...200 can be set here. If the value 0 is entered here, then this output does not have hysteresis. If the value 20 is entered here, then the output functions as follows: If the current flow value exceeds the value 200, then the output switches ③. If the current flow value drops below the hysteresis value of 180, then the switching output returns to its normal state ④. Note: To invert the operating method, use menu 3.3 to set the output from NO ① to NC ② or vice versa. This function is not activated on the counter switching point.
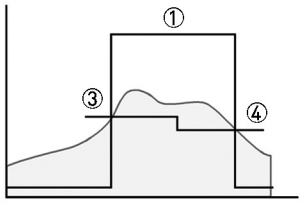 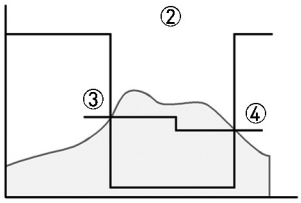			
1.2.1	OUTPUT B2	INACTIVE	
		FLOW.VAL B2	see FLOW.VAL B1
		COUNTER.VAL B2	see COUNTER.VAL B1
		PUL. VAL B2	B2 = pulse output Note: Settings under menu 3.6 pulse duration and 3.7 Pulses/unit
1.2.2	OUTPUT B2	HYST.B2	See HYST. B1
1.3	DISPLAY	FLOW RATE	
		COUNTER	
		FLOW&COUNT	
		PERCENT	

Level	Designation	Selection / Input	Explanation
1.4	TIME CONST.		Setting : 1 ... 20 seconds Note: The settable time constant affects the current output and the displayed current flow rate. It thus enables damped depiction if there is a highly variable flow rate. If the current flow rate is polled via HART® communication, then the transferred measured value is dependent on the time constant here, too.
1.5.1	RESET	COUNTER	YES - NO
1.5.2	RESET	ERROR	YES - NO
2.1	4-20mA OUT		The analogue current output can be set to fixed values in 10% steps between 4.00...20.00 mA. This function has no influence on binary switching outputs. Note: This test function is switched off in multidrop mode. Display: "NOT AVAILABLE".
2.2	OUTPUT B1	OPEN	The function assignment in menu 3.2 is not taken into consideration here.
		CLOSED	
2.3	OUTPUT B2	OPEN	The function assignment in menu 3.3 is not taken into consideration here.
		CLOSED	
2.4	INPUT B3		Here there is a visual depiction of whether or not input B3 has a voltage of 5...30 V. If input B3 is set to ACTIVE HI in menu 3.8, then the display shows "ON" when the switching voltage is applied. Note: NO test function possible when the output is set to INACTIVE in menu 3.8.
3.1	LANGUAGE	ENGLISH	
		DEUTSCH	
		FRANCAIS	
		ITALIANO	
		ESPANOL	
		CESKY	
		POLSKI	
		NEDERLANDS	
3.2	FUNCTION B1	INACTIVE	Output B1 is switched off.
		SWITCHING POINT	Output B1 switches at a set value depending on the current flow value.
		COUNTER_LIM	Output B1 switches when the counter exceeds the counter limit value.
3.3	CONTACT B1	NC contact	Output B1 is normally closed. If an alarm situation occurs, the contact opens.
		NO CONTACT	Output B1 is normally open. If an alarm situation occurs, the contact closes.
3.4	FUNCTION B2	INACTIVE	See FUNCTION B1
		SWITCHING POINT	See FUNCTION B1
		COUNTER_LIM	See FUNCTION B1
		PULSE OUTPUT	Output B2 generates pulses up to 10 Hz depending on the current flow value.

Level	Designation	Selection / Input	Explanation
3.5	CONTACT B2	NC contact	See CONTACT B1
		NO CONTACT	See CONTACT B1
3.6	PULSE DURATION	30 ms	
		50 ms	
		100ms	
		200 ms	
		500 ms	
3.7	PULSE/UNIT	0.000001	Smallest scaling factor Note: In the basic setting, the unit of the pulse output corresponds to the flow unit. Example: volume flow unit is m^3/h, so the pulse output is set to pulses / m^3 or mass flow unit is kg/h, so the pulse output is set to pulses / kg
		999999.0	Largest scaling factor
3.8	FUNCTION B3	INACTIVE	
		ACTIVE HI	The internal counter is reset to zero when a positive voltage of from 5...30 VDC is applied to terminals R+ and R for at least 100 ms.
		ACTIVE LO	The internal counter is reset to zero when a positive voltage of from 5...30 VDC applied to terminals R+ and R is interrupted for at least 100ms..
3.9	MULTIDROP	0…15	Multidrop mode means that the device works continuously in bus mode via HART® communication (max. 15 devices in parallel). The analogue current output is then set to a fixed value of 4.1 mA. Measured values are transferred via HART® communication. However, the display allows local read-off of the measured values. The polling address can be set to 1...15. Larger integer values are not permitted. If the polling address is set to 0, then HART® bus mode is switched off. The device is working in analogue mode. Current output 4...20 mA is active. Standard HART® communication remains guaranteed.
3.10	4mA CALIBR.		This menu item allows precise calibration of the current output. The device generates a fixed current output of 4.00 mA. If the measured value deviates from the displayed one, then the measured value must be input. When the menu is exited, the corrected value is saved.
3.11	20mA CALIBR.		This menu item allows precise calibration of the current output. The device generates a fixed current output of 20.00 mA. If the measured value deviates from the displayed one, then the measured value must be input. When the menu is exited, the corrected value is saved.
3.12	ALARM CURRENT	OFF	Measured values > 100% are indicated as a current signal up to a maximum of 22 mA.
		ON	In the event of an error the current output is set to the fixed value of 22m A.
3.13	END & UNIT		The flow unit and the upper range value can be changed. Note: Changing from volume flow measurement to mass flow measurement is only possible with a new calibration.
3.13.1	FLOW RATE		For a units list, see chapter 7.4 of the handbook
3.13.2	COUNTER		As standard, the unit for the counter is derived from the unit for the flow measurement. It can also be changed individually.

Level	Designation	Selection / Input	Explanation
3.14	LFC		LFC stands for Low Flow Cutoff. With variable area flowmeters, the flow range from 0 to 10% is not defined. In order to ensure a stable zero point of the analogue output, the analogue output can be set to a stable value of 4.00mA in a selectable range from 0 to 20%.
3.14.1	CONTROL	INACTIVE	LFC is switched off
		ACTIVE	LFC is switched on
3.14.2	LFC ON_VALUE	1…19 %	Switch-on value ①: The flow is greater than 20%. The current output corresponds to this. If the flow rate falls, then the current output follows it until the ON value. If the flow value continues to fall, the current output is switched to 4.00 mA ③.
3.14.3	LFC OFF_VALUE	2…20 %	Switch-off value ②: The flow rate is 0. The current output is 4.00 mA ③. If the flow rate rises, the current output remains at 4.00 mA ③ until the OFF value, and is switched to the corresponding flow value if the flow value rises further.
			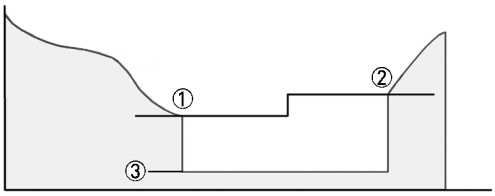
3.15	INP. CODE	YES	The input code is used to prevent authorised adjustment of the measurement parameters. The input code is not active by default. If YES is selected, the last code entered must be typed in. Factory code: → → → ↵ ↵ ↵ ↑ ↑ ↑ If, after confirmation with YES, the button → is also pressed, then a new, individual, nine-element code can be typed in. The display shows the required key combination.
		NO	
3.16	BASIC SETTING	YES	This menu item can be used to select the calibrated basic setting. This can be helpful if operating data have been changed a number of times. This menu item cannot be used to reset the calibration.
		NO	

7.1 Maintenance

Within the scope of routine maintenance of the system and pipelines, the flowmeter should also be inspected for signs of fouling, corrosion, mechanical wear and leaks, as well as damage to the measuring tube and indicator.
We advise that inspections be carried out at least once per year.
The device must be removed from the piping before cleaning.

CAUTION!
Pressurized pipes must be depressurized before removing the device.
Empty pipes as completely as possible.
In the case of devices used for measuring aggressive or hazardous media, appropriate safety precautions must be taken with regard to residual liquids in the measuring unit.
Always use new gaskets when reinstalling the device in the pipeline.
Avoid electrostatic charges when cleaning the surfaces (e.g. sight window)!

7.2 Replacement and retrofitting

Some of the variable area flowmeter components can be retrofitted:

- Float damping

Indicator M9:

- Eddy current brake
- Limit switch unit
- Current output ESK2A
- Counter module

The ESK3-PA Profibus can only be retrofitted following recalibration.

7.2.1 Replacing floats

- Remove the device from the piping.
- Take the upper snap ring out of the measuring unit.
- Take the upper float stop and float out of the measuring unit.
- Insert the new float into the centre hole of the lower float stop and push into the measuring unit along with the upper float catcher. While doing this, the float's upper guide rod must be guided through the middle hole of the float stop.
- Insert the snap ring into the measuring unit.
- Fit the device back into the piping.

CAUTION!
An additional measuring error is to be expected if recalibration is not conducted.

7.2.2 Retrofitting float damping

- Take the upper snap ring ① out of the measuring unit.
- Take the upper float stop ② and float ⑤ out of the measuring unit.
- Fasten the locking ring ③ into the lower slot of the float's guide rod.
- Slide ceramic sleeve ④ on to the float's guide rod and attach it to the top slot using the locking ring ③.
- Insert float into the lower float guide in the measuring unit.
- Retrofit the supplied damping cylinder with the integrated float stop ② into the measuring unit.
- Insert upper snap ring ①.

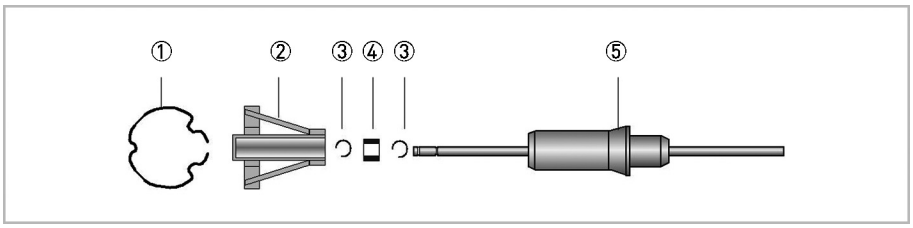

① Snap ring
② Float stop
③ Locking ring
④ Ceramic sleeve
⑤ Float

7.2.3 Retrofitting pointer damping

When retrofitting the pointer damping for indicator M9 with ESK2A current output and limit switches, note that the pointer may move briefly when installing the pointer damping (eddy current brake), which may trigger an error alarm or may change the current output by showing peaks.

The Eddy current brake consists of two parts:

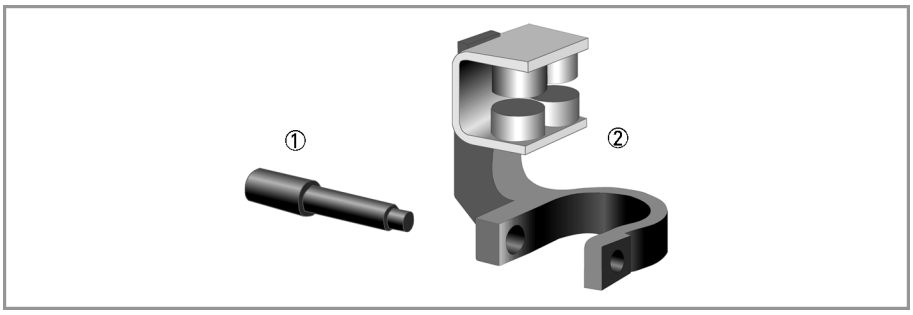

① Turnbuckle
② Eddy current brake

The brake with the retainer ring can be clipped onto the pointer cylinder independently of the built-in components (ESK2A, limit switch, counter). When installing the brake, note that the slit between the brake magnets is only about 3 mm and the material thickness of the aluminium pointer vane is 1mm.

- Clip on Eddy current brake ①.
- Turn brake slightly in a clockwise direction ②.
- Check that the pointer vane can be moved between the magnets without touching them.
- Screw in turnbuckle ②.

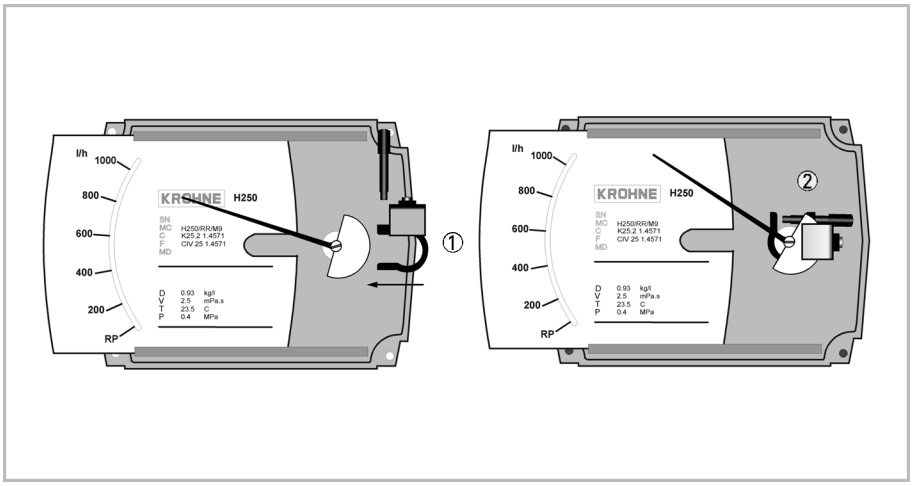

7.2.4 Retrofitting limit switch

- Remove counter module (if available).
- Loosen the locking screw ② on the contact pointer.
- Merge contact pointer ① in the middle.
- Insert the contact module into the third slot of the bracket until the semi-circle ③ surrounds the pointer cylinder.

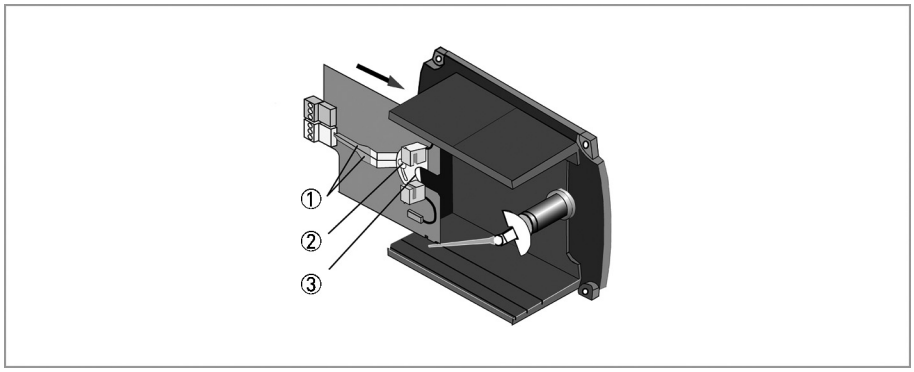

The contact module connecting terminals feature a pluggable design and can be removed in order to connect the cables.

7.2.5 Replacement - Retrofitting ESK2A

When replacing or retrofitting an ESK2A, the following are required at the time of ordering:

- SN - serial number or
- SO - sales order
  This information can be found on the indicator nameplate

INFORMATION!
The ESK2A is factory calibrated, making it possible to replace it or retrofit it without recalibrating.

- De-energise the ESK2A.
- Lift and remove the ESK2A with a screwdriver.

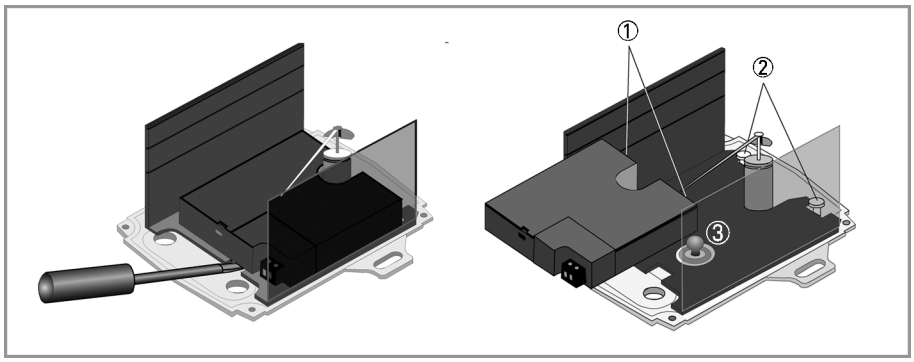

Plug-in technology is used to install the ESK2A.

- The ESK2A plug-in tongues ① are plugged in under the two bolts ② on the baseplate.
- Slight pressure is used to press the ESK2A onto the spring pins ③ until it stops, firmly attaching the ESK2A.

If a change in measuring range, product temperature, product, density, viscosity or pressure is desired, this can be done with the KroVaCal program or with a HART™ modem. However, each measuring unit is subject to its own physical limits, which the DroVaCal program correctly calculates, and may thus reject the desired change. If a change is performed using the program, the new data is also transmitted to the ESK2A.

Program features and possibilities

- Device identification
- Device address
- Serial number
- Measuring point designation
- Digital measured value query in flow units, % and mA
- Test / setting functions
- Calibration 4.00 and 20.00 mA
- Set current output to any desired value

7.2.6 Totalizer

The flow counter, in conjunction with the ESK2A electrical current output, can also be retroactively built into the indicator M9.

When ordering the ESK-Z totalizer as a retrofit kit, please indicate the device information (see scale) and the measuring range.

Providing this information will ensure that the new scale supplied with the counter display cutout is ready for installation.

The flow counter is then preset using the conversion factor corresponding to the measuring range.

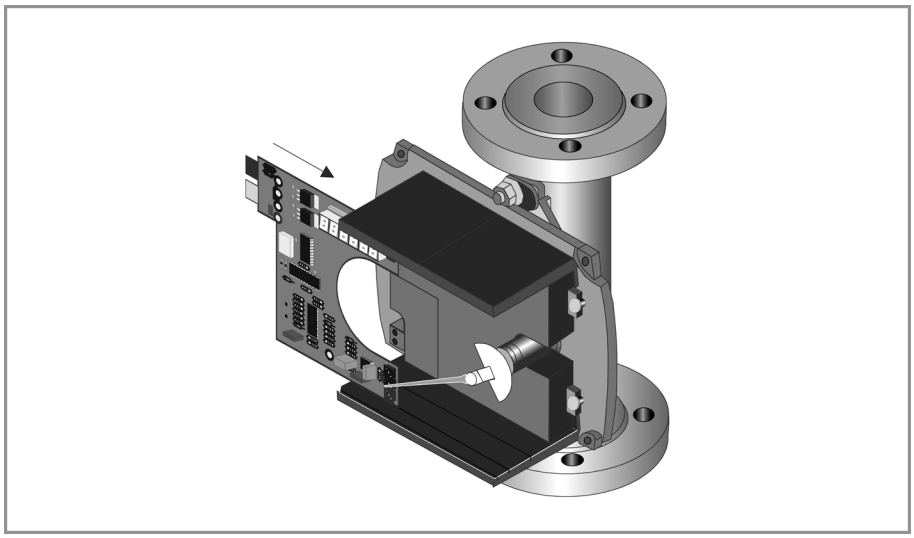

Installation

- Push the existing scale out.
- Insert the flow counter unit into the centre track of the module carrier.
- Insert the new scale into the module carrier.
- In so doing, lift the scale slightly until the scale cutout surrounds the counter display.

7.3 Spare parts availability

The manufacturer adheres to the basic principle that functionally adequate spare parts for each device or each important accessory part will be kept available for a period of 3 years after delivery of the last production run for the device.

This regulation only applies to spare parts which are subject to wear and tear under normal operating conditions.

7.3.1 List of spare parts

Spare part	Order no.
DN 15	
Float CIV 15, 1.4404	X251041000
Float DIV 15, 1.4404	X251042000
Float TIV 15, 1.4404	X251043000
Float DIVT 15, 1.4404	X251044000
Float TIV 15, Aluminium	X251043100
Float TIV 15, Titanium	X251043200
Set float stop; standard (1 float stop, 1 span ring)	X251050100
Set float stop; gas damping (ZrO_2)	X251050200
Set float stop; gas damping (PEEK)	X251050300
Damping bush (7x8) ZrO_2 incl. 2 span rings	X251053100
Damping bush (7x8) PEEK incl. 2 span rings	X251053200
DN 25	
Float CIV 15, 1.4404	X252041000
Float DIV 25, 1.4404	X252042000
Float TIV 25, 1.4404	X252043000
Float DIVT 25, 1.4404	X252044000
Set float stop; standard (1 float stop, 1 span ring)	X252050100
Set float stop; gas damping (ZrO_2)	X252050200
Set float stop; gas damping (PEEK)	X252050300
Damping bush (12x8) ZrO_2 incl. 2 span rings	X252053100
Damping bush (12x8) PEEK incl. 2 span rings	X252053200
DN 50	
Float CIV 55, 1.4404	X253041000
Float DIV 55, 1.4404	X253042000
Float TIV55, 1.4404	X253043000
Float DIVT 55, 1.4404	X253044000
Set float stop; standard (1 float stop, 1 span ring)	X253050100
Set float stop; gas damping (ZrO_2)	X253050200
Set float stop; gas damping (PEEK)	X253050300
Damping bush (14x10) ZrO_2 incl. 2 span rings	X253053100
Damping bush (14x10) PEEK incl. 2 span rings	X253053200

Spare part	Order no.
DN 80	
Float CIV 85, 1.4404	X254041000
Float DIV 85, 1.4404	X254042000
Float TIV 85, 1.4404	X254043000
Float DIVT 85, 1.4404	X254044000
Set float stop; standard (1 float stop, 1 span ring)	X254050100
Set float stop; gas damping (ZrO_2)	X254050200
Set float stop; gas damping (PEEK)	X254050300
Damping bush (18x14) ZrO_2 incl. 2 span rings	X254053100
Damping bush (18x14) PEEK incl. 2 span rings	X254053200
DN 100	
Float CIV 105, 1.4404	X255041000
Float DIV 105, 1.4404	X255042000
Float DIVT 105, 1.4404	X255044000
Set float stop; stand. (1 float stop, 1 span ring) only for bottom !	X255050100
Set float stop; gas damping (ZrO_2)	X255050200
Set float stop; gas damping (PEEK)	X255050300
Damping bush (18x14) ZrO2 incl. 2 span rings	X254053100
Damping bush (18x14) PEEK incl. 2 span rings	X254053200
Indicator M9	
Indicator housing complete no scale	X251010000
Indicator complete stainless steel unpainted, no scale	X251011000
Cover M9 complete, standard (blue; RAL 5015)	X251010100
Cover M9 complete, salt water resistant (grey; RAL 7001)	X251010200
Cover M9 complete, no silicone (blue; RAL, 5015)	X251010300
Cover M9 complete, stainless steel unpainted	X251010400
Inspection glass shatterproof glass	X251011100
Inspection glass plastic (Makrolon)	X251011200
Cover seal (silicone)	X251012100
M9 baseplate standard	X251020100
M9 baseplate salt water resistant	X251020200
Retrofit kit HT extension	X251021000
Module carrier (profile track)	X251021100
Set housing attachment parts (pair)	X251021300
Pointer system, complete	X251022100
Eddy current brake	X251022200
Printed scale (serial number required)	on request
Blank scale	X251023200
Printed scale with counter cutout (serial number required)	on request
Blank scale with counter cutout	X251023400

Other spare parts on request

7.4 Availability of services

The manufacturer offers a range of services to support the customer after expiration of the warranty. These include repair, maintenance, technical support and training.

INFORMATION!
For more precise information, please contact your local sales office.

7.5 Returning the device to the manufacturer

7.5.1 General information

This device has been carefully manufactured and tested. If installed and operated in accordance with these operating instructions, it will rarely present any problems.

CAUTION!
Should you nevertheless need to return a device for inspection or repair, please pay strict attention to the following points:

- *Due to statutory regulations on environmental protection and safeguarding the health and safety of the personnel, the manufacturer may only handle, test and repair returned devices that have been in contact with products without risk to personnel and environment.*
- *This means that the manufacturer can only service this device if it is accompanied by the following certificate (see next section) confirming that the device is safe to handle.*

CAUTION!
If the device has been operated with toxic, caustic, flammable or water-endangering products, you are kindly requested:

- *to check and ensure, if necessary by rinsing or neutralising, that all cavities are free from such dangerous substances,*
- *to enclose a certificate with the device confirming that is safe to handle and stating the product used.*

7.5.2 Form (for copying) to accompany a returned device

CAUTION!
To avoid any risk for our service personnel, this form has to be accessible from outside of the packaging with the returned device.

Company:		Address:
Department:		Name:
Tel. no.:		Fax no. and/or Email address:
Manufacturer's order no. or serial no.:		
The device has been operated with the following medium:		
This medium is:		radioactive
		water-hazardous
		toxic
		caustic
		flammable
		We checked that all cavities in the device are free from such substances.
		We have flushed out and neutralized all cavities in the device.
We hereby confirm that there is no risk to persons or the environment through any residual media contained in the device when it is returned.		
Date:		Signature:
Stamp:		

7.6 Disposal

CAUTION!
Disposal must be carried out in accordance with legislation applicable in your country.

Separate collection of WEEE (Waste Electrical and Electronic Equipment) in the European Union:

According to the directive 2012/19/EU, the monitoring and control instruments marked with the WEEE symbol and reaching their end-of-life **must not be disposed of with other waste**.
The user must dispose of the WEEE to a designated collection point for the recycling of WEEE or send them back to our local organisation or authorised representative.

8.1 Operating principle

The flowmeter H250 operates on the float measuring principle. The measuring unit consists of a metal cone in which a float can move freely up and down. The medium flows through the flowmeter from bottom to top. The float adjusts itself so that the buoyancy force B, acting on it, the form drag D and its weight W are in equilibrium: W = B + D.

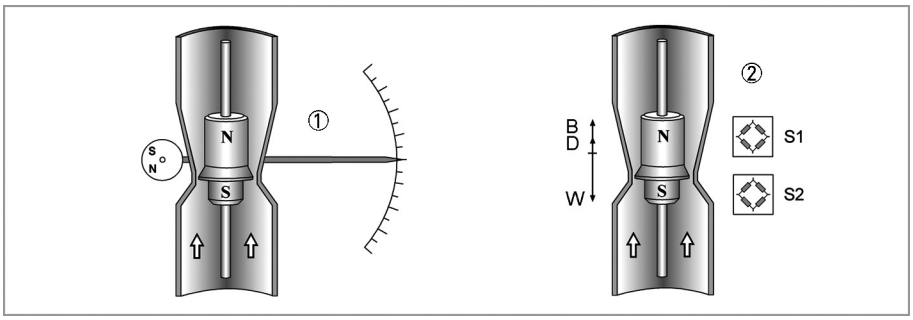

Figure 8-1: Operating principle

① Indication principle M9 and M8MG
② Indication principle M10 and M8EG

For indicators M9 and M8MG ① the flow-dependent height of the float in the measuring unit is transmitted by means of a magnetic coupling and displayed on a scale. For indicators M10 and M8EG ② the flow-dependent height of the float in the measuring unit is transmitted to the electronic display by magnetic field sensors S1 and S2.

Operating principle of H250H and H250U

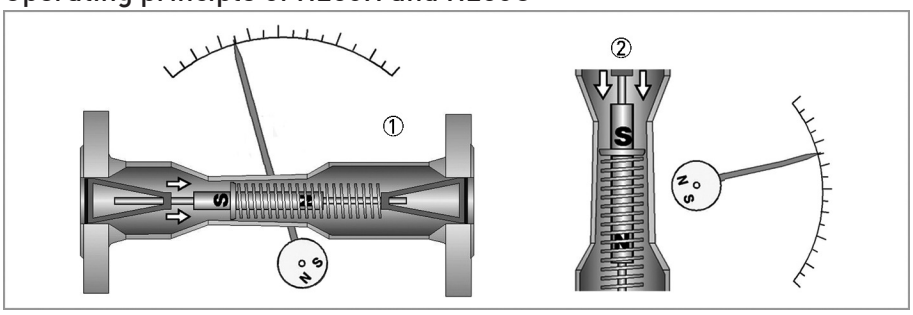

Figure 8-2: Operating principle H250H and H250U

① H250H - horizontal flow direction
② H250U - flow direction from top to bottom

The flowmeters operate according to a modified float measuring principle. The guided float adjusts itself so that the flow force acting on it is in equilibrium with the opposing spring force. The flow-dependent position of the float in the measuring unit is displayed on a scale by means of a magnetic coupling.

INFORMATION!
Flowmeters H250H and H250U only work in conjunction with indicator M9.

8.2 Technical data

INFORMATION!

- *The following data is provided for general applications. If you require data that is more relevant to your specific application, please contact us or your local sales office.*
- *Additional information (certificates, special tools, software,...) and complete product documentation can be downloaded free of charge from the website (Downloadcenter).*

Measuring system

Application range	Flow measurement of liquids, gases and vapors
Operating method / measuring principle	Variable area measuring principle
Measured value	
Primary measured value	Float position
Secondary measured value	Operating and standard volumetric flow

Measuring accuracy

Directive	VDI / VDE 3513, sheet 2 (q_G = 50%)
H250 /RR /HC /F	1.6%
H250/C (Ceramic, PTFE) H250H, H250U, H250 (100 : 1)	2.5%

Operating conditions

Temperature	
Max. operating temperature TS	-196..+300°C / -321...+572°F
Pressure	
Max. operating pressure PS	Depending on the version up to 400 barg / 5802 psig
Max. test pressure PT	Depending on the version (refer to nameplate)
Min. required operating pressure	2 times greater than pressure loss (see measuring ranges)
Float damping during gas measurement recommended:	
DN15...25 / ½"...1"	Operating pressure <0.3 barg / 4.4 psig
DN50...100 / 2"...4"	Operating pressure <0.2 barg / 2.9 psig

Installation conditions

Inlet run	≥ 5 x DN
Outlet run	≥ 3 x DN

Materials

Device	Flange	Measuring tube	Float	Float guide	Ring orifice
H250/RR	Stainless steel CrNi 1.4404 / 316L				
H250/HC	Hastelloy® C-22 (2.4602) solid or plated	Hastelloy® C4			
H250/F - Food	CrNi steel 1.4435		CrNi steel 1.4435 / 1.4404		
H250/C Ceramics/PTFE ①	CrNi steel 1.4571 with TFM/PTFE ②		PTFE or Al_2O_3 with FFKM gasket	Al_2O_3 and PTFE	Al_2O_3

① DN100/4" only PTFE
② TFM/PTFE liner (electrically non-conductive), conductive PTFE on request

INFORMATION!
H250/C - DN100 / 4" only PTFE
H250/F: wetted surfaces Ra ≤0.8 µm, optional ≤0.6 µm

Other options:

- Special materials on request: e.g. SMO 254, titanium, 1.4435
- Float damping: ceramic or PEEK
- Gasket for devices with female thread as insert: O-ring FPM / FKM

Temperatures

DANGER!
For devices to be used in hazardous areas, special temperature ranges apply. These can be found in the separate instructions.

Temperatures H250/M9 - mechanical indicator without power supply

	Float	Liner	Product temperature		Ambient temperature	
			[°C]	[°F]	[°C]	[°F]
H250/RR	Stainless Steel		-196...+300	-321...+572	-40...+120	-40…+248
H250/RR screw fitting					-20…+120	-4…+248
H250/HC	Hastelloy® C4		-196...+300	-321...+572	-40...+120	-40…+248
H250/C	PTFE	PTFE	-196...+70	-321...+158	-40...+70	-40…+158
H250/C	Ceramic	PTFE	-196...+150	-321...+302	-40...+70	-40…+158
H250/C	Ceramic	TFM / Ceramic	-196...+250	-321...+482	-40...+120	-40…+248
H250 H/U	Stainless Steel		-40...+100	-40…+212	-20…+90	-4…+194

Temperatures H250/M9 - with electrical components [°C]

Maximum product temperatures T_m			$T_{amb.}$ < +40°C		$T_{amb.}$ < +60°C ①	
EN	ASME	Version with	Standard	HT	Standard	HT
DN15, DN25	½", 1"	ESK2A, ESK3-PA	+200	+300	+180	+300
		ESK2A with counter	+200	+300	+80	+130
		Limit switch NAMUR	+200	+300	+200	+300
		3-wire limit switch	+200	+300	+130	+295
DN50	2"	ESK2A, ESK3-PA	+200	+300	+165	+300
		ESK2A with counter	+180	+300	+75	+100
		Limit switch NAMUR	+200	+300	+200	+300
		3-wire limit switch	+200	+300	+120	+195
DN80, DN100	3", 4"	ESK2A, ESK3-PA	+200	+300	+150	+250
		ESK2A with counter	+150	+270	+70	+85
		Limit switch NAMUR	+200	+300	+200	+300
		3-wire limit switch	+190	+300	+110	+160

Temperatures H250/M9 - with electrical components [°F]

Maximum product temperatures T_m			$T_{amb.}$ < +104 °F		$T_{amb.}$ < +104 °F ①	
EN	ASME	Version with	Standard	HT	Standard	HT
DN15, DN25	½", 1"	ESK2A, ESK3-PA	392	572	356	572
		ESK2A with counter	392	572	176	266
		Limit switch NAMUR	392	572	392	572
		3-wire limit switch	392	572	266	563
DN50	2"	ESK2A, ESK3-PA	392	572	165	572
		ESK2A with counter	356	572	167	212
		Limit switch NAMUR	392	572	392	572
		3-wire limit switch	392	572	248	383
DN80, DN100	3", 4"	ESK2A, ESK3-PA	392	572	302	482
		ESK2A with counter	302	518	158	185
		Limit switch NAMUR	392	572	392	572
		3-wire limit switch	374	572	230	320

① if there are no heat insulation measures, a heat-resistant cable is necessary (continuous operating temperature of the cable to be used: +100°C / +212°F)

Abbreviation

HT	High-temperature version
ESK2A	Current output 2-wire 4…20 mA
ESK3-PA	PROFIBUS PA interface

Minimum ambient temperatures $T_{amb.}$ with ESK and limit switches

Device	[°C]	[°F]
Limit switch	-25 / -40	-13 / -40
ESK2A - ESK3-PA	-40	-40

Temperatures H250 /M8 /M10

	[°C]	[°F]

M8M

Min. product temperature T_m without limit switches	-80...+200	-112…+392
Min. product temperature T_m with limit switches	-25…+200	-13…+392
Ambient temperature $T_{amb.}$	-25…+70	-13…+158

M8E

Max. product temperature T_m at $T_{amb.}$ +40°C / +104°F	-25...+200	-13…+392
Max. product temperature T_m at $T_{amb.}$ +50°C / +122°F	-25...+185	-13…+365
Max. product temperature T_m at $T_{amb.}$ +60°C / +140°F	-25...+145	-13…+293
Ambient temperature $T_{amb.}$	-25…+70	-13…+158

M10

Max. product temperature T_m at $T_{amb.}$ +60°C / +140°F	-80...+200	-112…+392
Ambient temperature $T_{amb.}$	-40…+75	-40…+167

Indicator M8

M8M limit switches

Terminal connection	2.5 mm^2		
Limit switch	I7S2002-N SC2-N0	SJ2-SN	SJ2-S1N
Type	2-wire NAMUR	2-wire NAMUR ①	2-wire NAMUR ①
Switch configuration	NC contact	NC contact	NO contact
Nominal voltage U_0	8 VDC	8 VDC	8 VDC
Pointer vane not read	≥ 3 mA	≥ 3 mA	≤1 mA
Pointer vane read	≤1 mA	≤1 mA	≥ 3 mA

① safety oriented

M8E current output

Cable gland	M16 x 1.5
Cable diameter	8…10 mm
Terminal connection	4 mm^2
Measuring signal	4...20 mA = 0…100 % flow value in 2-wire technology
Power supply	14.8...30 VDC
Min. power supply for HART®	20.5 VDC
Power supply influence	< 0.1%
Dependence on external resistance	< 0.1%
Temperature influence	< 10 µA / K
Max. external resistance / load	640 Ohm (30 VDC)
Min. load for HART®	250 Ohm

M8E HART® configuration

Manufacturer name (code)	KROHNE Messtechnik (69)
Model name	M8E (230)
HART® protocol revision	5.1
Device revision	1
Physical layer	FSK
Device category	Transmitter

M8E process variable

M8E process variable flow rate	Values [%]	Signal output [mA]
Over range	+102,5 (±1%)	20,24...20,56
Device error identification	>106,25	≥21,00
Maximum	112,5	22
Multidrop operation	-	4,5

Indicator M9

Cable gland	Material	Cable diameter	
M 16x1.5 Standard ①	PA	3...7 mm	0.118...0.276"
M20 x 1.5 ②	PA	8...13 mm	0.315...0.512"
M 16x1.5 ①	Nickel-plated brass	5...9 mm	0.197...0.355"
M20 x 1.5 ②	Nickel-plated brass	10...14 mm	0.394...0.552"

① M9
② M9 and M40

M9 - M40 limit switches

Terminal connection	2.5 mm^2			
Limit switch	I7S23,5-N SC3,5-N0	SJ3,5-SN ①	SJ3,5-S1N ①	SB3,5-E2
NAMUR	yes	yes	yes	no
Connection type	2-wire	2-wire	2-wire	3-wire
Switching element function	NC contact	NC contact	NO contact	PNP NO contact
Nominal voltage U_0	8 VDC	8 VDC	8 VDC	10...30 VDC
Pointer vane not detected	≥ 3 mA	≥ 3 mA	≤ 1 mA	≤ 0.3 VDC
Pointer vane detected	≤ 1 mA	≤ 1 mA	≥ 3 mA	U_B - 3 VDC
Continuous current	-	-	-	max. 100 mA
No load current I_0	-	-	-	≤ 15 mA

① safety oriented

M9 current output ESK2A

Terminal connection	2.5 mm^2
Power supply	12...30 VDC
Min. power supply for HART®	18 VDC
Measuring signal	4.00...20.00 mA = 0...100% flow value in 2-wire technology
Power supply influence	<0.1%
Dependence on external resistance	<0.1%
Temperature influence	< 10 µA/K
Max. external resistance / load	800 Ohm (30 VDC)
Min. load for HART®	250 Ohm
Software firmware version	02.15
Ident No.	4000054602
ESK2A HART ® configuration	
Manufacturer name (code)	KROHNE Messtechnik (69 = 45h)
Model name	ESK2A (226 = E2h)
HART® protocol revision	5.9
Device revision	1
Physical layer	FSK
Device category	Transmitter without galvanic isolation

M9 ESK2A process variable

ESK2A process variable flow rate	Values [%]	Signal output [mA]
Over range	+102.5 (±1%)	20.24...20.56
Device error identification	> 106.25	>21.00
Maximum	131.25	25
Multidrop operation	-	4.5
Min. $U_{ext.}$	12 VDC	

M9 ESK-Z totalizer

Terminal connection	2.5 mm^2
Power supply	10...30 VDC
$R_{ext.}$ current loop	0...600 Ohm
Power consumption	max. 2.5 Watt
Indication error	< 1% in relation to the value displayed
Max. reset voltage	30 VDC
Min. reset pulse	300 ms
Software firmware version	1.19
Power supply	10...30 VDC
Max. current	50 mA
Max. dissipation	250 mW
T on	80 ms fixed pulse width
T off	depending on flow rate
U on	Ub – 3 VDC
U off	0 VDC
Pulse value	1 pulse = 1 display counter advance (1 litre, 1 m^3 ...)

Indicator M9 ESK3-PA Profibus

Terminal connection	2.5 mm^2
Bus cable R´	15...150 Ohm/km
Bus cable L´	0.4...1 mH/km
Bus cable C´	80...200 nF/km

M9 ESK3PA Hardware

Hardware	acc. to IEC 1158-2 and FISCO model
Supply voltage	9...32 VDC
Base current	12 mA
Starting current	< base current
FDE (fault drop electronics)	< 18 mA
Accuracy acc. to VDI/ VDE 3513	1.6
Measurement resolution	< 0.1% full scale value
Temperature influence	< 0.05% / K full scale value
Software firmware version	1.01/000418
Ident No.	3184980200

M9 ESK3PA Software

GSD	Devices master file
Device profile	Profiles B, V3.0
Function blocks	
Flow rate (AI0)	Volume or mass
Totalizer (TOT0)	Volume totalizer Default unit: [m^3]
Totalizer (TOT1)	Mass totalizer Default unit: [kg]
Address range	0...126, default 126
SAP`s	Service Access Points
DD	Device Description

Indicator M10

M10 cable gland

(Standard)	without
M20 x 1.5	On request
M 20x1.5 Ex d	On request

M10 current output

Terminal connection	2.5 mm^2
Power supply	24 VDC ±30%
Min. power supply for HART®	18 VDC
Measuring signal	4.00...20.00 mA = 0...100% flow value in 2-wire technology
Power supply influence	< 0.1%
Dependence on external resistance	< 0.1%
Temperature influence	< 5 µA/K
Max. external resistance / load	≤ 630 Ohm
Min. load for HART	≥ 250 Ohm
Software firmware version	02.17
Ident No.	4000276702

M10 HART®

Manufacturer name (code)	KROHNE Messtechnik (69 = 45h)
Model name	M10 (234 = EA)
HART® protocol revision	5.9
Device revision	1
Physical layer	FSK
Device category	Transmitter

M10 process variable

	Values [%]	Signal output [mA]
Over range	+105 (±1%)	20,64...20.96
Device error identification	> 110	> 21.60
Maximum	112.5	22
Multidrop operation	-	4.5
Lift-off voltage	12 VDC	

M10 binary output

Two binary outputs	Galvanically isolated	
Operating mode	Switch output	NAMUR or open collector
Configurable as	Switch contact or pulse output	open / closed or max. 10 pulses / s
NAMUR switch output		
Power supply	8 VDC	
Signal current	> 3 mA switching value not reached;	< 1 mA switching value reached
Switch output, open collector		
Power supply	8...30 VDC	
P_{max}	500 mW	
I_{max}	100 mA	

M10 reset input

Binary input	Galvanically isolated
Operating mode	Reset counter
Configurable as	active Hi / active Lo
Voltage level	5...30 VDC
Current consumption	≤ 1 mA
Pulse length (active)	≥500 ms

Approvals

Standard	Indicator	Designation
ATEX	M9 mechanical	II2GD IIC II3GD IIC
	M9 electrical	II2G Ex ia IIC T6 II3G Ex nA II T6 II3D IP65 T65°C
	M8 mechanical	II2GD IIC II3GD IIC
	M8 electrical	II2G Ex ia IIC T6...T1
	M10	II2G Ex d IIC T6...T1 II3D Ex tD A22 IP66 T65°C
FM	M9	IS/I/1/ABCD;T6 NI/I/2/ABCD;T6 IS/I, II, III/1/A-G NI/II/2/ABCD
	M10	XP/I/1/ABCD;T6 NI/I/2/ABCD;T6 XP/I/1/IIC/T6 NI/I/2/IIC/T6 DIP/II,III/1/EFG/T6 S/II,III/2/FG/T6
CSA	M10	XP/I/1/ABCD;T6 NI/I/2/ABCD;T6 XP/I/1/IIC/T6 NI/I/2/IIC/T6 DIP/II,III/1/EFG/T6 S/II,III/2/FG/T6
Nepsi	M9	Ex ia IIC T1-T6 Ex nA II T1-T6
	M8	Ex iA IIC T1-T6
	M10	Ex d IIC T1-T6
INMETRO	M10	II2G EEx d IIC T6...T1

8.3 Dimensions and weights

Dimensions H250/M9

Front view

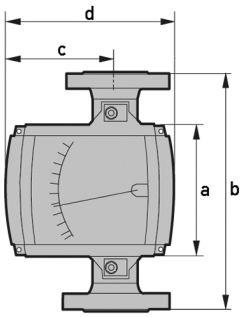

Side view

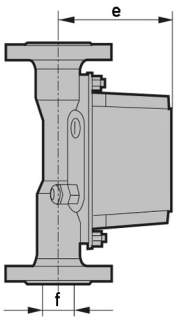

with heating

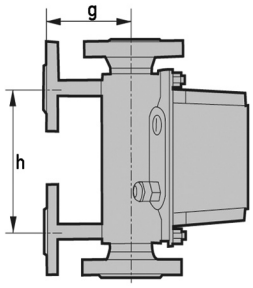

High-temperature

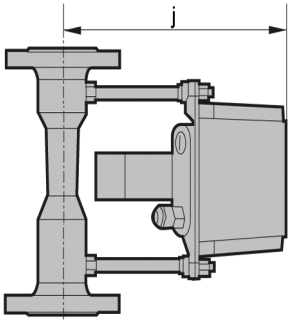

	a		b		d		h	
	[mm]	["]	[mm]	["]	[mm]	["]	[mm]	["]
All nominal sizes	138	5.44	250	9.85	181	7.13	150	5.91
ISO 228			300	11.82				
H250/C - 3"/300 lb			300	11.82				

EN	ASME	c		e		Ø f		g		j	
		[mm]	["]	[mm]	["]	[mm]	["]	[mm]	["]	[mm]	["]
DN15	½"	110.5	4.35	107	4.22	20	0.79	100	3.94	187	7.37
DN25	1"	110.5	4.35	119	4.69	32	1.26	106	4.18	199	7.84
DN50	2"	123.5	4,86	132	5.20	65	2.56	120	4.73	212	8.35
DN80	3"	123.5	4,86	148	5.83	89	3.51	145	5.71	228	8.98
DN100	4"	123.5	4,86	158	6.22	114	4.49	150	5.91	232	9.14

ISO 228
female thread
screwed

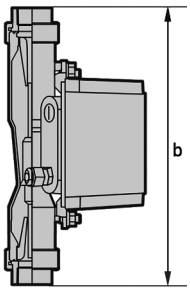

ISO 228
female thread
welded

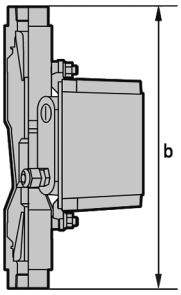

H250/F
Clamp connection

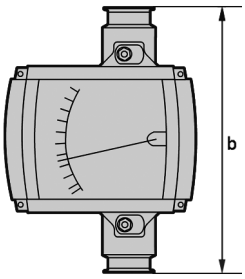

H250/F
Screw connection
DIN 11851

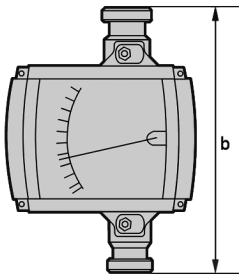

①

① Stainless steel 1.4435 - EHEDG tested - wetted surfaces Ra ≤ 0.8 / 0.6 µm

Dimensions H250/M10 /M8

M10
Front view

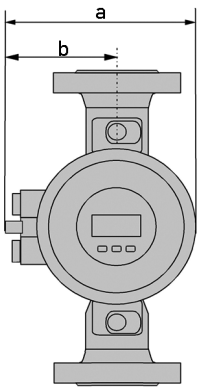

M10
Side view

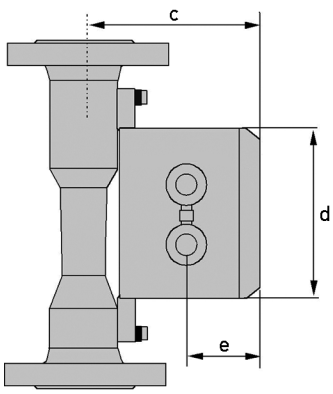

M8
Front view

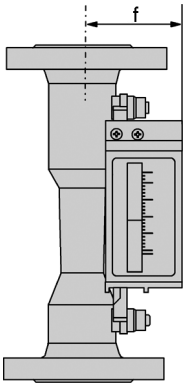

M8
Side view

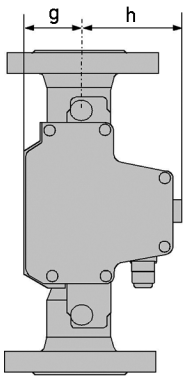

		Dimensions M10									
		a		b		c		Ø d		e	
EN	ASME	[mm]	["]	[mm]	["]	[mm]	["]	[mm]	["]	[mm]	["]
DN15	½"	147	5.79	83	3.27	118	4.65	132	5.20	55	2.17
DN25	1"	147	5.79	83	3.27	130	5.12	132	5.20	55	2.17
DN50	2"	147	5.79	83	3.27	143	5.63	132	5.20	55	2.17
DN80	3"	147	5.79	83	3.27	160	6.30	132	5.20	55	2.17
DN100	4"	147	5.79	83	3.27	169	6.66	132	5.20	55	2.17

		Dimensions M8M						Dimensions M8E					
		f		g		h		f		g		h	
EN	ASME	[mm]	["]	[mm]	["]	[mm]	["]	[mm]	["]	[mm]	["]	[mm]	["]
DN15	½"	63	2.48	60	2.36	58.5	2.30	53.5	2.11	66	2.60	52.5	2.07
DN25	1"	75	2.95	60	2.36	58.5	2.30	65.5	2.58	66	2.60	52.5	2.07
DN50	2"	89	3.51	73	2.88	45.5	1.79	79.5	3.13	79	3.11	39.5	1.56
DN80	3"	105	4.14	73	2.88	45.5	1.79	95.5	3.76	79	3.11	39.5	1.56
DN100	4"	114	4.49	73	2.88	45.5	1.79	104	4.12	79	3.11	39.5	1.56

For overall height see devices with indicator M9

Weights

		H250		with heating			
Nominal meter size		EN 1092-1		Flange connection		Ermeto connection	
EN	ASME	[kg]	[lb]	[kg]	[lb]	[kg]	[lb]
DN15	½“	3.5	7.7	5.6	12.6	3.9	8.6
DN25	1“	5	11	7.5	16.5	5.8	12.8
DN50	2“	8.2	18.1	11.2	24.7	9.5	21
DN80	3“	12.2	26.9	14.8	32.6	13.1	28.9
DN100	4“	14	30.9	17.4	38.4	15.7	34.6

		H250/C [Ceramic / PTFE]						Screw connec.	
Nominal meter size		EN 1092-1		ASME 150 lb		ASME 300 lb		DIN 11864-1	
EN	ASME	[kg]	[lb]	[kg]	[lb]	[kg]	[lb]	[kg]	[lb]
DN15	½“	3.5	7.7	3.2	7.1	3.5	7.7	2	4.4
DN25	1“	5	11	5.2	11.5	6.8	15	3.5	7.7
DN50	2“	10	22.1	10	22.1	11	24.3	5	11
DN80	3“	13	28.7	13	28.7	15	33.1	7.6	16.8
DN100	4“	15	33.1	16	35.3	17	37.5	10.3	22.7

Process connections

	Standard	Conn. dim.	Pressure rating
Flanges (H250/RR /HC /C)	EN 1092-1	DN15...150	PN16...250
	ASME B16.5	½...6"	150...2500 lb
	JIS B 2220	15…100	10...20K
Clamp connections (H250/RR /F)	DIN 32676	DN15...100	10...16 bar
	ISO 2852	Size 25...139.7	10...16 bar
Screw connections (H250/RR /HC /F)	DIN 11851	DN15...100	25...40 bar
	SMS 1146	1...4"	6 bar / 88.2 psi
Female thread welded (H250/RR /HC)	ISO 228	G½...G2"	≥ 50 bar / 735 psi
	ASME B1.20.1	½…2" NPT	
Female thread (H250/RR /HC) with insert, FPM gasket and union nut	ISO 228	G½…2"	≤ 50 bar ≤ 735 psi
	ASME B1.20.1	½…2" NPT	
Thread connection aseptic (H250/F)	DIN 11864 - 1	DN15…50	PN40
		DN80…100	PN16
Flange aseptic (H250/F)	DIN 11864 - 2	DN15…50	PN40
		DN80…DN100	PN16
Meters (H250/RR /HC) with heating:			
Heating with flange connection	EN 1092-1	DN15	PN40
	ASME B16.5	½"	150 lb / RF
Heating pipe connection for Ermeto	-	E12	PN40

Higher pressure ratings and other connections on request

Bolts and tightening torques

For flowmeters with PTFE liner or ceramic liner and PTFE raised face, tighten the flange threads with the following torques:

Nominal sizes EN

	Stud bolts	Tightening torques	
Nominal size acc. to EN 1092-1	Quantity x size	[Nm]	[lb-ft]
DN15 PN40 ①	4x M12	9.8	7.1
DN25 PN40 ①	4x M12	21	15
DN50 PN40 ①	4x M16	57	41
DN80 PN16 ①	8x M16	47	34
DN100 PN16 ①	8x M16	67	48

① standard connections; other connections on request

Nominal size ASME

	Stud bolts		Tightening torques	
Nominal sizes acc. to ASME B 16.5	Quantity x size		[Nm]	[lb-ft]
	150 lb	300 lb		
½" 150 lb / 300 lb ①	4x ½"	4x ½"	5.2	3.8
1" 150 lb / 300 lb ①	4x ½"	4x 5/8"	10	7.2
2" 150 lb / 300 lb ①	4x 5/8"	8x 5/8"	41	30
3" 150 lb / 300 lb ①	4x 5/8"	8x ¾"	70	51
4" 150 lb / 300 lb ①	8x 5/8"	8x ¾"	50	36

① standard connections; other connections on request

Low pressure resistance (vacuum) H250/C

Max. process temperature ▸			+70°C (+158°F)		+150°C (*302°F)		+250°C (+482°F)	
			Min. operating pressure					
Nominal size	Float	Lining	[mbar abs.]	[psia]	[mbar abs.]	[psia]	[mbar abs.]	[psia]
DN15...DN100	PTFE	PTFE	100	1.45	-	-	-	-
DN15...DN80	Ceramic	PTFE	100	1.45	250	3,63	-	-
DN15...DN80	Ceramic	TFM / ceramic	100	1.45	100	1.45	100	1.45

8.4 Measuring ranges

H250/RR - Stainless Steel, H250/HC - Hastelloy®

Measuring span:	10 : 1		
Flow values:	Values = 100%	Water: 20°C / 68°F	Air: 20°C / 68°F, 1.013 bara / 14.7 psia

		Water			Air			Max. pressure loss			
Float ▸		TIV	CIV	DIV	TIV Alu	TIV	DIV	TIV Alu	TIV	CIV	DIV
Nominal meter size	Cone	[l/h]			[Nm³/h]			[mbar]			
DN15, ½"	K 15.1	18	25	-	0.42	0.65	-	12	21	26	-
	K 15.2	30	40	-	0.7	1	-	12	21	26	-
	K 15.3	55	63	-	1	1.5	-	12	21	26	-
	K 15.4	80	100	-	1.7	2.2	-	12	21	26	-
	K 15.5	120	160	-	2.5	3.6	-	12	21	26	-
	K 15.6	200	250	-	4.2	5.5	-	12	21	26	-
	K 15.7	350	400	700	6.7	10	18 ①	12	21	28	38
	K 15.8	500	630	1000	10	14	28 ①	13	22	32	50
	K 15.8	-	-	1600 ②	-	-	50 ②	-	-	-	85
DN25, 1"	K 25.1	480	630	1000	9.5	14	-	11	24	32	72
	K 25.2	820	1000	1600	15	23	-	11	24	33	74
	K 25.3	1200	1600	2500	22	35	-	11	25	34	75
	K 25.4	1700	2500	4000	37	50	110 ①	12	26	38	78
	K 25.5	3200	4000	6300	62	95	180 ①	13	30	45	103 ③
DN50, 2"	K 55.1	2700	6300	8400	58	80	230 ①	8	13	74	60
	K 55.2	3600	10000	14000	77	110	350 ①	8	13	77	69
	K 55.3	5100	16000	25000	110	150	700 ①	9	13	84	104
DN80, 3"	K 85.1	12000	25000	37000	245	350	1000 ①	8	16	68	95
	K 85.2	16000	40000	64000	280	400	1800 ①	9	16	89	125
DN100, 4"	K105.1	19000	63000	100 000	-	550	2800 ①	-	-	120	220

① P >0.5 bar
② with TR float
③ 300 mbar with damping (gas measurement)

INFORMATION!
The operating pressure should be at least double the pressure loss for liquids and five times for gases. The indicated pressure losses are valid for water and air at maximum flow rate. Other flow ranges on request. Conversion of other media or operating data is performed using the calculation method in accordance with VDI /VDE Directive 3513.

Reference condition for gas measurements:
Flow measurements for gases are attributed to
Nl/h or Nm³/h: Volume current in standard state 0°C - 1.013 bara (DIN 1343)

H250/RR - Stainless steel, H250/HC - Hastelloy®

Measuring span:	10 : 1		
Flow values:	Values = 100%	Water: 20°C / 68°F	Air: 20°C / 68°F, 1.013 bara / 14.7 psia

		Water			Air			Max. pressure loss			
Float ▸		TIV	CIV	DIV	TIV Alu	TIV	DIV	TIV Alu	TIV	CIV	DIV
Nominal meter size	Cone	[GPH]			[SCFM]			[psig]			
DN15, ½"	K 15.1	4.76	6.60	-	0.26	0.40	-	0.18	0.31	0.38	-
	K 15.2	7.93	10.6	-	0.43	0.62	-	0.18	0.31	0.38	-
	K 15.3	14.5	16.6	-	0.62	0.93	-	0.18	0.31	0.38	-
	K 15.4	21.1	26.4	-	1.05	1.36	-	0.18	0.31	0.38	-
	K 15.5	31.7	42.3	-	1.55	2.23	-	0.18	0.31	0.38	-
	K 15.6	52.8	66.0	-	2.60	3.41	-	0.18	0.31	0.38	-
	K 15.7	92.5	106	185	4.15	6.20	11.2 ①	0.18	0.31	0.41	0.56
	K 15.8	132	166	264	6.20	8.68	17.4 ①	0.19	0.32	0.47	0.74
	K 15.8	-	-	423 ②	-	-	31.0 ②	-	-	-	1.25
DN25, 1"	K 25.1	127	166	264	5.89	8.68	-	0.16	0.35	0.47	1.06
	K 25.2	217	264	423	9.30	14.3	-	0.16	0.35	0.49	1.09
	K 25.3	317	423	660	13.6	21.7	-	0.16	0.37	0.50	1.10
	K 25.4	449	660	1057	22.9	31.0	68.2 ①	0.18	0.38	0.56	1.15
	K 25.5	845	1057	1664	38.4	58.9	111 ①	0.19	0.44	0.66	1.51 ③
DN50 2"	K 55.1	713	1664	2219	36.0	49.6	143 ①	0.12	0.19	1.09	0.88
	K 55.2	951	2642	3698	47.7	68.2	217 ①	0.12	0.19	1.13	1.01
	K 55.3	1347	4227	6604	68.2	93.0	434 ①	0.13	0.19	1.23	1.53
DN80 3"	K 85.1	3170	6604	9774	152	217	620 ①	0.12	0.24	1.00	1.40
	K 85.2	4227	10567	16907	174	248	1116 ①	0.13	0.24	1.31	1.84
DN100 4"	K105.1	5019	16643	26418	-	341	1736 ①	-		1.76	3.23

① P >7.4 psig
② with TR float
③ 4.4 psig with damping (gas measurement)

INFORMATION!
The operating pressure should be at least double the pressure loss for liquids and five times for gases. The indicated pressure losses are valid for water and air at maximum flow rate. Other flow ranges on request. Conversion of other media or operating data is performed using the calculation method in accordance with VDI /VDE Directive 3513.

Reference condition for gas measurements:
Flow measurements for gases are attributed to
SCFM or SCFH: Volume current in standard state 15°C - 1.013 bar abs. (ISO 13443)

H250/C - Ceramic/PTFE

Measuring span:	10 : 1		
Flow values:	Values = 100%	Water: 20°C / 68°F	Air: 20°C / 68°F, 1.013 bara / 14.7 psia

		Flow rate				Max. pressure loss			
		Water		Air		Water		Air	
Liner / Float ▸		PTFE	Ceramic	PTFE	Ceramic	PTFE	Ceramic	PTFE	Ceramic
Size	Cone	[l/h]		[Nm³/h]		[mbar]			
DN15, ½"	E 17.2	25	30	0.7	-	65	62	65	62
	E 17.3	40	50	1.1	1.8	66	64	66	64
	E 17.4	63	70	1.8	2.4	66	66	66	66
	E 17.5	100	130	2.8	4	68	68	68	68
	E 17.6	160	200	4.8	6.5	72	70	72	70
	E 17.7	250	250	7	9	86	72	86	72
	E 17.8	400	-	10	-	111	-	111	-
DN25, 1"	E 27.1	630	500	16	18	70	55	70	55
	E 27.2	1000	700	30	22	80	60	80	60
	E 27.3	1600	1100	45	30	108	70	108	70
	E 27.4	2500	1600	70	50	158	82	158	82
	E 27.5	4000 ①	2500	120	75	290	100	194	100
DN50, 2"	E 57.1	4000	4500	110	140	81	70	81	70
	E 57.2	6300	6300	180	200	110	80	110	80
	E 57.3	10000	11000	250	350	170	110	170	110
	E 57.4	16000 ①	-	-	-	284	-	-	-
DN80, 3"	E 87.1	16000	16000	-	-	81	70	-	-
	E 87.2	25000	25000	-	-	95	85	-	-
	E 87.3	40000 ①	-	-	-	243	-	-	-
DN100, 4"	E 107.1	40000	-	-	-	100	-	-	-
	E 107.2	60000 ①	-	-	-	225	-	-	-

① special float

INFORMATION!
The operating pressure should be at least double the pressure loss for liquids and five times for gases. The indicated pressure losses are valid for water and air at maximum flow rate. Other flow ranges on request. Conversion of other media or operating data is performed using the calculation method in accordance with VDI /VDE Directive 3513.

Reference condition for gas measurements:
Flow measurements for gases are attributed to
Nl/h or Nm³/h: Volume current in standard state 0°C - 1.013 bara (DIN 1343)

H250/C - Ceramic/PTFE

Measuring span:	10 : 1		
Flow values:	Values = 100%	Water: 20°C / 68°F	Air: 20°C / 68°F, 1.013 bara / 14.7 psia

		Flow rate				Max. pressure loss			
		Water		Air		Water		Air	
	Liner / Float ▸	PTFE	Ceramic	PTFE	Ceramic	PTFE	Ceramic	PTFE	Ceramic
Size	Cone	[GPH]		[SCFM]		[psig]			
DN15, ½"	E 17.2	6.60	7.93	0.43	-	0.94	0.90	0.94	0.90
	E 17.3	10.6	13.2	0.68	1.12	0.96	0.93	0.96	0.93
	E 17.4	16.6	18.5	1.12	1.49	0.96	0.96	0.96	0.96
	E 17.5	26.4	34.3	1.74	2.48	0.99	0.99	0.99	0.99
	E 17.6	42.3	52.8	2.98	4.03	1.04	1.02	1.02	1.02
	E 17.7	66.0	66.0	4.34	5.58	1.25	1.04	1.25	1.04
	E 17.8	106	-	6.2	-	1.61	-	1.61	-
DN25, 1"	E 27.1	166	132	9.92	11.2	1.02	0.80	1.02	0.80
	E 27.2	264	185	18.6	13.6	1.16	0.87	1.16	0.87
	E 27.3	423	291	27.9	18.6	1.57	1.02	1.57	1.02
	E 27.4	660	423	43.4	31.0	2.29	1.19	2.29	1.19
	E 27.5	1056 ①	660	74.4	46.5	4.21	1.45	2.81	1.45
DN50, 2"	E 57.1	1057	1189	68.2	86.8	1.18	1.02	1.18	1.02
	E 57.2	1664	1664	111.6	124	1.60	1.16	1.60	1.16
	E 57.3	2642	2906	155	217	2.47	1.60	2.47	1.60
	E 57.4	4226 ①	-	-	-	4.12	-	-	-
DN80, 3"	E 87.1	4227	4227	-	-	1.18	1.02	-	-
	E 87.2	6604	6604	-	-	1.38	1.23		-
	E 87.3	10567 ①	-	-	-	3.55	-		-
DN100, 4"	E 107.1	10567	-	-	-	1.45	-		-
	E 107.2	15850 ①	-	-	-	3.29	-		-

① special float

INFORMATION!
The operating pressure should be at least double the pressure loss for liquids and five times for gases. The indicated pressure losses are valid for water and air at maximum flow rate. Other flow ranges on request. Conversion of other media or operating data is performed using the calculation method in accordance with VDI /VDE Directive 3513.

Reference condition for gas measurements:
Flow measurements for gases are attributed to
SCFM or SCFH: Volume current in standard state 15°C - 1.013 bara (ISO 13443)

H250H - Horizontal installation position

Measuring span:	10 : 1		
Flow values:	Values = 100%	Water: 20°C / 68°F	Air: 20°C / 68°F, 1.013 bara / 14.7 psia

EN	ASME	Cone	Water [l/h]	Air [Nm³/h]	Pressure loss [mbar]
DN15	½	K 15.1	70	1.8	195
		K 15.2	120	3	204
		K 15.3	180	4.5	195
		K 15.4	280	7.5	225
		K 15.5	450	12	250
		K 15.6	700	18	325
		K 15.7	1200	30	590
		K 15.8	1600	40	950
		K 15.8	2400	60	1600
DN25	1"	K 25.1	1300	35	122
		K 25.2	2000	50	105
		K 25.3	3000	80	116
		K 25.4	5000	130	145
		K 25.5	8500	220	217
		K 25.5	10000	260	336
DN50	2"	K 55.1	10000	260	240
		K 55.2	16000	420	230
		K 55.3	22000	580	220
		K 55.3	34000	900	420
DN80	3"	K 85.1	25000	650	130
		K 85.2	35000	950	130
		K 85.2	60000	1600	290
DN100	4"	K 105.1	80000	2200	250
		K 105.1	120000	3200	340

INFORMATION!
The operating pressure should be at least double the pressure loss for liquids and five times for gases. The indicated pressure losses are valid for water and air at maximum flow rate. Other flow ranges on request. Conversion of other media or operating data is performed using the calculation method in accordance with VDI /VDE Directive 3513.

Reference condition for gas measurements:
Flow measurements for gases are attributed to
Nl/h or Nm³/h: Volume current in standard state 0°C - 1.013 bara (DIN 1343)

H250H - Horizontal installation position

Measuring span:	10 : 1		
Flow values:	Values = 100%	Water: 20°C / 68°F	Air: 20°C / 68°F, 1.013 bara / 14.7 psia

EN	ASME	Cone	Water [GPH]	Air [SCFM]	Pressure loss [psig]
DN15	1/2"	K 15.1	18.5	1.12	2.87
		K 15.2	31.7	1.86	3.00
		K 15.3	47.6	2.79	2.87
		K 15.4	74.0	4.65	3.31
		K 15.5	119	7.44	3.68
		K 15.6	185	11.2	4.78
		K 15.7	317	18.6	8.68
		K 15.8	423	24.8	14.0
		K 15.8	634	37.2	23.5
DN25	1"	K 25.1	343	21.7	1.79
		K 25.2	528	31.0	1.54
		K 25.3	793	49.6	1.71
		K 25.4	1321	80.6	2.13
		K 25.5	2245	136	3.19
		K 25.5	2642	161	4.94
DN50	2"	K 55.1	2642	161	3.53
		K 55.2	4227	260	3.38
		K 55.3	5812	360	3.23
		K 55.3	8982	558	6.17
DN80	3"	K 85.1	6604	403	1.91
		K 85.2	9246	589	1.91
		K 85.2	15851	992	4.26
DN100	4"	K 105.1	21134	1364	3.68
		K 105.1	31701	1984	5.00

INFORMATION!
The operating pressure should be at least double the pressure loss for liquids and five times for gases. The indicated pressure losses are valid for water and air at maximum flow rate. Other flow ranges on request. Conversion of other media or operating data is performed using the calculation method in accordance with VDI /VDE Directive 3513.

Reference condition for gas measurements:
Flow measurements for gases are attributed to
SCFM or SCFH: Volume current in standard state 15°C - 1.013 bara (ISO 13443)

H250U - Vertical installation position

Measuring span:	10 : 1		
Flow values:	Values = 100%	Water: 20°C / 68°F	Air: 20°C / 68°F, 1.013 bara / 14.7 psia
Flow direction	vertical downwards		

EN	ASME	Cone	Water [l/h]	Air [Nm^3/h]	Pressure loss [mbar]
DN15	½"	K 15.1	65	1.6	175
		K 15.2	110	2.5	178
		K 15.3	170	4	180
		K 15.4	260	6	200
		K 15.5	420	10	220
		K 15.6	650	16	290
		K 15.7	1100	28	520
		K 15.8	1500	40	840
DN25	1"	K 25.1	1150	30	97
		K 25.2	1800	45	85
		K 25.3	2700	70	92
		K 25.4	4500	120	115
		K 25.5	7600	200	172
DN50	2"	K 55.1	9000	240	220
		K 55.2	15000	400	230
		K 55.3	21000	550	240

INFORMATION!
The operating pressure should be at least double the pressure loss for liquids and five times for gases. The indicated pressure losses are valid for water and air at maximum flow rate. Other flow ranges on request. Conversion of other media or operating data is performed using the calculation method in accordance with VDI /VDE Directive 3513.

Reference condition for gas measurements:
Flow measurements for gases are attributed to
Nl/h or Nm^3/h: Volume current in standard state 0°C - 1.013 bara (DIN 1343)

H250U - Vertical installation position

Measuring span:	10 : 1		
Flow values:	Values = 100%	Water: 20°C / 68°F	Air: 20°C / 68°F, 1.013 bara / 14.7 psia
Flow direction	vertical downwards		

EN	ASME	Cone	Water [GPH]	Air [SCFM]	Pressure loss [psig]
DN15	½"	K 15.1	17.2	0.99	2.57
		K 15.2	29.1	1.55	2.62
		K 15.3	44.9	2.48	2.65
		K 15.4	68.7	3.72	2.94
		K 15.5	111	6.20	3.23
		K 15.6	172	9.92	4.26
		K 15.7	291	17.4	7.64
		K 15.8	396	24.8	12.3
DN25	1"	K 25.1	304	18.6	1.42
		K 25.2	476	27.9	1.25
		K 25.3	713	43.4	1.35
		K 25.4	1189	74.4	1.69
		K 25.5	2008	124	2.53
DN50	2"	K 55.1	2378	149	3.23
		K 55.2	3963	248	3.38
		K 55.3	5548	341	3.53

INFORMATION!
The operating pressure should be at least double the pressure loss for liquids and five times for gases. The indicated pressure losses are valid for water and air at maximum flow rate. Other flow ranges on request. Conversion of other media or operating data is performed using the calculation method in accordance with VDI /VDE Directive 3513.

Reference condition for gas measurements:
Flow measurements for gases are attributed to
SCFM or SCFH: Volume current in standard state 15°C - 1.013 bara (ISO 13443)

KROHNE – Process instrumentation and measurement solutions

- Flow
- Level
- Temperature
- Pressure
- Process Analysis
- Services

Head Office KROHNE Messtechnik GmbH
Ludwig-Krohne-Str. 5
47058 Duisburg (Germany)
Tel.: +49 203 301 0
Fax: +49 203 301 10389
info@krohne.com

The current list of all KROHNE contacts and addresses can be found at:
www.krohne.com

© KROHNE 05/2016 - 4000269303 - MA H250 R03 en - Subject to change without notice.