Pull-out
Condensed Instructions

KROHNE

© KROHNE 12/2002

DIN A4: 7.10003.32.00
US size: 7.10003.72.00

GR

Installation and operating instructions

IFC 020 K
IFC 020 F
IFC 020 E

Signal converters for electromagnetic flowmeters

Applicable to Software Versions

- IFC 020 **K** and IFC 020 **F** No. **3170330200**
- IFC 020 **E** No. **3175870200**

How to use these Instructions

The flowmeters are supplied ready for operation.

The primary head must be installed in the pipeline as described in the installation instructions inside the packing of the primary head.

- Installation location and connection to power (Section 1) Pages 1/1-1/8
- Electrical connection of outputs and inputs (Section 2) Pages 2/1-2/4
- Factory settings and start-up (Section 3) Pages 3/1-3/2

Power the flowmeter. THAT'S ALL. The system is operative.

Contents

Versions IFC 020 signal converter		**0/3**
Items included with supply		**0/3**
Software history		**0/3**
System description		**0/4**
Product liability and warranty		**0/4**
CE / EMC / Standards / Approvals		**0/4**
Part A	**System installation and start-up**	**1/1-3/2**
1	**Electrical connection: power supply**	**1/1-1/8**
1.1	Important installation notes **– PLEASE NOTE !**	1/1
1.1.1	Location	1/1
1.1.2	Only for separate systems/signal converters (F- and E versions)	1/1
1.1.3	Cable entries (K- and F versions)	1/1
1.2	Connection to power	1/2
1.3	Electrical connection of separate primary head (F- and E versions)	1/3-1/6
1.3.1	General information on signal cable A and B as well as field current cable C	1/3
1.3.2	Grounding of primary head	1/3
1.3.3	Stripping (preparation) of signal cable A and B	1/4
1.3.4	Cable length (max. distance between signal converter and primary head)	1/5
1.3.5	Connection diagrams I and II (IFC 020 F signal converter and primary head)	1/6
1.3.6	Connection diagrams III and IV (IFC 020 E signal converter and primary head)	1/7-1/8
2	**Electrical connection of outputs and inputs**	**2/1-2/4**
2.1	Current output I	2/1
2.2	Pulse output P and status output S	2/1
2.3	Control input E (applicable with IFC 020 E only)	2/2
2.4	Connection diagrams for outputs and inputs	2/3-2/4
3.	**Start-up**	**3/1-3/2**
3.1	Power-on and measurement	3/1
3.2	Factory settings	3/1
3.3	Setting data	3/2
Part B	**IFC 020_ / D Signal converter**	**4/1-5/12**
4	**Operation of the signal converter**	**4/1-4/12**
4.1	Krohne operator control concept	4/1
4.2	Operating and check elements	4/2
4.3	Function of keys	4/3-4/4
4.4	Table of settable functions	4/5-4/9
4.5	Error messages in measuring mode	4/10
4.6	Reset totalizer and cancel error messages, RESET/QUIT menu	4/11
4.7	Examples of setting the signal converter	4/12
5	**Description of functions**	**5/1-5/12**
5.1	Full-scale range $Q_{100\%}$	5/1
5.2	Time constant	5/1
5.3	Low-flow cutoff SMU	5/2
5.4	Display	5/2-5/3
5.5	Internal electronic totalizer	5/3
5.6	Current output I	5/4
5.7	Pulse output P	5/5-5/6
5.8	Status output S	5/7
5.9	Language	5/8
5.10	Entry code	5/8
5.11	Primary head	5/9
5.12	User-defined unit	5/10
5.13	F/R mode, forward/reverse flow measurement	5/11
5.14	Characteristic of outputs	5/11

5.15	Applications	5/12
5.16	Setting data	5/12
5.17	Communication interface	5/12
5.18	Control input E (IFC 020 E only)	5/12

Part C	**Special applications, functional checks, service, and order numbers**	**6/1-9/1**
6	**Special applications**	**6/1-6/6**
6.1	HART interface	6/1-6/2
6.2	KROHNE RS 485 interface	6/2
6.3	Stable signal outputs when measuring tube empty	6/3-6/4
6.4	Pulsating flow	6/5
6.5	Rapid changes in flowrate	6/5
6.6	Unsteady display and outputs	6/6
7	**Functional checks**	**7/1-7/8**
7.1	Zero check, Fct. 3.03	7/1
7.2	Test of measuring range Q, Fct. 2.01	7/1
7.3	Hardware information and error status, Fct. 2.02	7/2
7.4	Faults and symptoms during start-up and process flow measurement	7/2-7/4
7.5	Test of signal converter using GS 8A simulator (option)	7/5-7/8
8	**Service**	**8/1-8/9**
8.1	Illustrations used for service work	8/1-8/2
8.2	Replacement of power fuses	8/3
8.3	Changeover of operating voltage on AC Versions 1 and 2	8/4
8.4	Replacement of electronics unit of signal converter	8/5
8.5	Cleaning the signal converter housing	8/5
8.6	Turning the converter housing of the compact flowmeters	8/6
8.7	IFC 020 K and F: Directions for folding the ribbon cable on the display unit	8/7
8.8	IFC 020 K and F: Illustrations of the PCBs	8/8
8.9	IFC 020 E: Illustrations of the PCBs	8/9
9	**Order numbers**	**9/1**

Part D	**Technical data, measuring principle and block diagram**	**10/1-12/1**
10	**Technical data**	**10/1-10/7**
10.1	Full-scale range $Q_{100\%}$	10/1
10.2	Error limits at reference conditions	10/2
10.3	IFC 020 signal converter	10/3-10/4
10.4	Dimensions and weights	10/5-10/6
10.5	Instrument name plates	10/7
11	**Measuring principle**	**11/1**
12	**Block diagram - signal converter**	**12/1**

Part E	**Index**	**E1-E2**

Printed form to accompany flowmeters returned to Krohne	**E3**

IFC 020 signal converter versions

- All signal converter versions include local display and control elements.
  The operating data are factory-set to your ordered specifications

IFC 020 K **Compact flowmeter,**
Signal converter is directly mounted on primary head.

IFC 020 F **Signal converter in field housing,**
Electrical connection to primary head via field power and signal cables.

IFC 020 E **Signal converter as 19" plug-in unit** (in compliance with DIN 41 494, part 5)
Electrical connection to primary head via field power and signal cables.

Items included with supply

- Signal converter in the version as ordered, see above.
- These installation and operating instructions for the signal converter,
  including 20-page pull-out condensed instructions for installation, electrical connection, start-up and operator control of the signal converter.
- 2 plug connectors for connection of power supply and outputs/inputs (K- and F- versions only)
- for separate system version only, F- and E versions:
  signal cable in the version and length as ordered (standard: signal cable A, length 10 m / 30 ft)

Software history

Display & control unit		**Handheld HHT 020**		**CONFIG user software**	
IFC 020 K and F		**IFC 020 E**		**ImoCom, RS 485, HART**	
Software	Status	Software	Status	Software	Status
		3170330100	replaces		
		3170330200	replaces		
3170330200	**current**	**3175870200**	**current**	**from V 3.15**	**current**

System description

Electromagnetic flowmeters with the IFC 020 signal converter are precision instruments designed for linear flow measurement of liquid products.

The process liquids must be electrically conductive: ≥ 5 µS/cm
(for cold demineralized water ≥ 20 µS/cm).

The full-scale range $Q_{100\%}$ can be set as a function of the meter size:
$Q_{100\%}$ = 0.006 - 86 860 m³/hr = 0.03 - 156.672 US Gal/min
This is equivalent to a flow velocity of 0.3 - 12 m/s or 1 - 40 ft/s.

Product liability and warranty

The electromagnetic flowmeters with the IFC 020 signal converter are designed solely for measuring the volumetric flowrate of electrically conductive, liquid process products.

These flowmeters are not certified for use in hazardous areas. Other flowmeter series are available for such applications.

Responsibility as to suitability and intended use of these electromagnetic flowmeters rests solely with the operator.

Improper installation and operation of the flowmeters (systems) may lead to loss of warranty.

In addition, the “General conditions of sale” forming the basis of the purchase contract are applicable.

If flowmeters need to be returned to Krohne, please note the information given on the last-but-one page of these Instructions. Krohne regrets that it cannot repair or check your flowmeter(s) unless accompanied by the completed form sheet.

CE / EMC / Standards / Approvals

- Electromagnetic flowmeters with the IFC 020 signal converter meet the protection requirements of **Directive 89/336/EEC** in conjunction with **EN 50081-1** (1992) and **EN 50082-2** (1995), as well as **Directives 73/23/EEC** and **93/68/EEC** in conjunction with **EN 61010-1,** and bear the **CE marking.**

Part A System installation and start-up

1 Electrical connection: power supply

1.1 Important installation notes PLEASE NOTE !

1.1.1 Location

- **Electrical connection in accordance with VDE 0100** ”Regulations governing heavy-current installations with line voltages up to 1000 V” or **equivalent national regulations.**
- Do not cross or loop **cables inside the terminal compartment.**
- Use **separate cable entries** (see below) for power supply, field current cables, signal lines, outputs and inputs.
- Protect flowmeters or switchgear cabinets with built-in devices from direct **sunlight.** Fit a sunshade if necessary.
- When **installed in switchgear** cabinets, signal converters must be adequately cooled, e.g. use fans or heat exchangers.
- Do not expose signal converters to intense **vibration.**

1.1.2 Only for separate systems/signal converters (F- and E versions)

- Keep **distance between primary head and signal converter** as short as possible. Refer to Sect. 1.3.4 for maximum permissible length of signal and field current cables.
- Use the supplied **Krohne signal cable A** (Type DS), standard length 10 m (33 ft).
- Always **calibrate** primary head and signal converter **together.** Therefore, when installing, ensure **primary constant GK is identical;** refer to instrument nameplate for the primary head. If the GK is not identical, set the signal converter to the GK of the primary head. Refer also to Section 4.
- **Dimensions of signal converter;** refer to Section 10.4.

1.1.3 Cable entries (K- and F- versions)

Number of cable entries: **2** for the compact flowmeters
4 for the seperate IFC 020 F signal converter

NOTE: Ensure gaskets are fitted correctly and maintain the following max. torques!

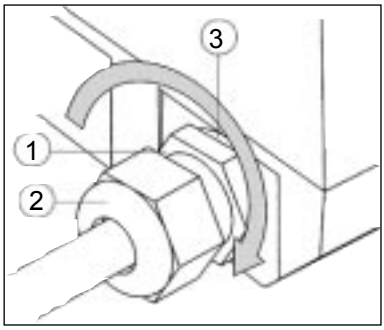

1 Max. torques for PG 13.5, 1/2“ NPT or 1/2“ PF adapters: **4 Nm / 2.8 ft × lbf**

2 Max. torques for PG 13.5 only: **3 Nm / 2.1 ft × lbf**

3 Gasket

A) PG 13.5 cable entries
These cable entries may only be used for flexible electrical cables if the relevant electrical regulations so allow, e.g. National Electric Code (NEC).
Do not fix rigid metal conduits (IMC) or flexible plastic conduits to the PG 13.5 cable entries, refer to “Point B/C” below (1/2” NPT or PF adapters).

B) 1/2“ NPT adapters **C) 1/2“ PF adapters**
For most North American systems the regulations require that electrical conductors be laid in conduits, particularly where power voltages > 100 V AC are concerned.
In such cases, use the 1/2” NPT or 1/2” PF adapters to which flexible plastic conduits can be screwed. **Do not use rigid metal conduits (IMC)!**
Lay conduits such that no moisture can penetrate into the converter housing.
Should there be risk of any condensation water forming, fill the cross-section of the conduit around the cables at these adapters with a suitable sealing compound.

PLEASE NOTE !

- Rated values: The flowmeter housings protecting the electronic equipment from dust and moisture must always be kept closed. The selected creepage distances and clearances have been dimensioned in conformity with VDE 0110 and IEC 664 for contamination category 2. Supply circuits and output circuits are designed to meet the standards of overvoltage class II.

- Safety isolation: the flowmeters (signal converters) must be provided with an isolating facility.

1. AC Version
230/240 V AC (200 - 260 V AC)
switch-selectable to
115/120 V AC (100 - 130 V AC)

2. AC Version
200 V AC (170 - 220 V AC)
switch-selectable to
100 V AC (85 - 110 V AC)

- **Note information on instrument nameplate:** supply voltage and frequency

- The **PE protective ground conductor** for the power supply **must be connected** to the separate U-clamp terminal in the terminal compartment of the signal converter.
  For exceptions (compact systems), refer to installation instructions for the primary head.

- **Connection diagrams** for electrical connection between primary head and signal converter: refer to Section 1.3.5 and 1.3.6.

DC Version (in preparation for IFC 020 E)
24 V DC (18 - 32 V DC)

- **Note information on instrument nameplate:** supply voltage and frequency.

- For measurement reasons, connect an **FE functional ground conductor** to the separate U-clamp terminal in the terminal compartment of the signal converter.

- If connected to a functional extra-low voltage source (24 V AC / DC, 48 V AC), provide for **protective separation (PELV)** in conformity with VDE 0100 / VDE 0106 or IEC 364 / IEC 536, or equivalent national regulations.

- **Connection diagrams** for power supply and electrical connection between primary head and signal converter: refer to Section 1.3.6.

Connection to power (K- and F- versions only)

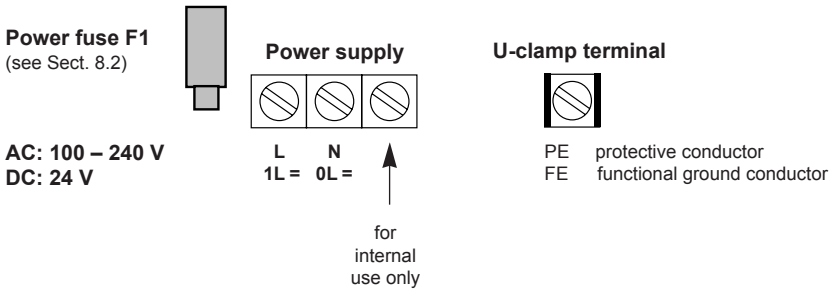

For electrical connection of the IFC 020 E power supply see Section 1.3.6, connection diagrams III to VI.

1.3 Electrical connection of separate primary heads (F- and E- versions)

1.3.1 General remarks on signal lines A and B and field current line C

Proper operation of the equipment is ensured when Krohne signal lines A and B are used with foil screen and magnetic shield.

- Signal lines must be firmly installed.
- Shields are connected via stranded drain wires.
- Underwater or underground routing is possible.
- Insulating material flame-retardant to IEC 332.1 / VDE 0742.
- Low-halogen, unplasticized signal lines which remain flexible at low temperatures.

Signal line A (type DS) with double shielding

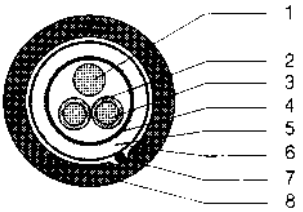

1 Stranded drain wire, 1st shield, 1.5 mm^2 or AWG 14
2 Insulation
3 Stranded wire 0.5 mm^2 or AWG 20 (3.1 red/3.2 white)
4 Special foil, 1st shield
5 Insulation
6 Mu-metal foil, 2nd shield
7 Stranded drain wire, 2nd shield, 0.5 mm^2 or AWG 20
8 Outer sheath

Signal line B (type BTS) with triple shielding (bootstrap line), for **IFC 020 E** only

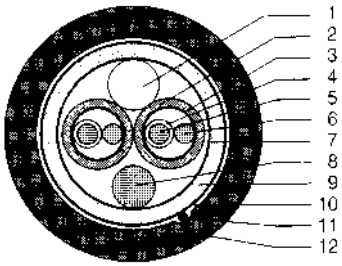

1 Dummy glider wire
2 Insulation (2.1 red/2.2 white)
3 Special foil, 1st shield (3.1/3.2)
4 Insulation (4.1/4.2)
5 Stranded wire 0.5 mm^2 or AWG 20 (5.1 red/5.2 white)
6 Stranded drain wire, 1st shield, 0.5 mm^2 or AWG 20 (6.1/6.2)
7 Special foil, 2nd shield
8 Stranded drain wire, 2nd shield, 1.5 mm^2 or AWG 14
9 Insulation
10 Mu-metal foil, 3rd shield
11 Stranded drain wire, 3rd shield, 0.5 mm^2 or AWG 20
12 Outer sheath

Field current line C (single shielding with IFC 020 F)
Line 2 x 0.75 mm^2 (18 AWG) Cu, 2 x 1.5 mm^2 (14 AWG) Cu or 2 x 2.5mm^2 (12 AWG) Cu single shielding (Cu = copper cross section)
The cross section depends on the required cable length, see table in Section 1.3.4.

1.3.2 Grounding of primary head

- All flowmeters must be properly grounded.
- The grounding conductor should not transmit any interference voltages.
- Do not ground any other electrical device together with this conductor.
- The primary head is connected to ground by means of an **FE functional ground conductor.**
- Special information on grounding various primary heads is contained in the separate **installation instructions for primary heads.**
- These instructions also contain detailed descriptions on how to use grounding rings and how to install primary heads in metal or plastic pipes or internally coated pipelines.

Please note the different lengths given in the table for signal converter and primary head.

Length mm (inch)	Converter IFC 020 **F + E** Signalcable A	Converter only IFC 020 **E** Signalcable **B**	Primary head
a	55 (2.17)	70 (2.76)	90 (3.54)
b	10 (0.39)	50 (1.97)	8 (0.31)
c	15 (0.59)	25 (0.98)	25 (0.98)
d	8 (0.31)	8 (0.31)	8 (0.31)
e	–	50 (1.97)	70 (2.76)
f	–	8 (0.31)	8 (0.31)

Customer-supplied materials	
W	Insulation tubing (PVC), Ø 2.0 - 2.5 mm (dia. 1”)
X	Heat-shrinkable tubing or cable sleeve
Y	Wire end sleeve to DIN 41 228: E 1.5-8
Z	Wire end sleeve to DIN 41 228: E 0.5-8

Signal cable A (type DS) double shielding, **for primary head and IFC 020 E**

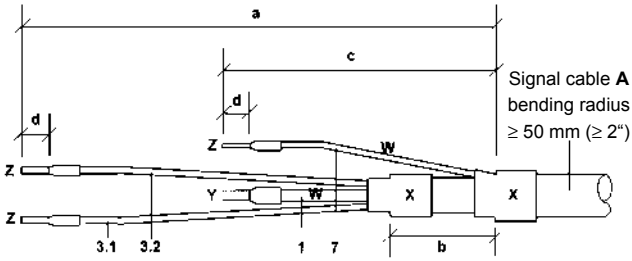

Signal cable A (type DS) double shielding, **for IFC 020 F**

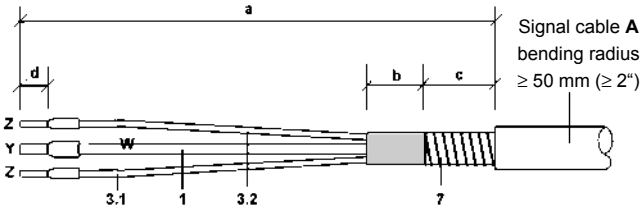

For cable fixation in signal converter housing IFC 020 F
see illustration in Section 10.4

External shielding of signal cable A (Type DS)
Wrap stranded drain wire (7) around the mu-metal foil (6) and clamp under the shield terminal in the signal converter terminal box (see also diagram in Sect. 1.3.5).

Signal line B (type BTS) with triple shielding (bootstrap), **for IFC 020 E**

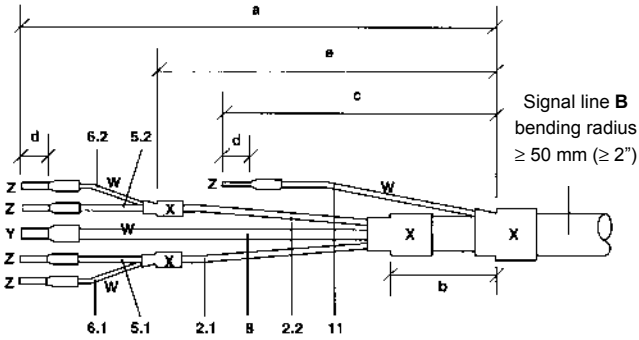

1.3.4 **Cable lengths** (max. distance between signal converter and primary head)

Abbreviations and explanatory notes
used in the following tables, diagrams and connection diagrams

A Signal cable A (type DS), with double shielding, see diagram A for max. length
B Signal line B (type BTS) with triple shielding, max. length see diagram B **(IFC 020 E only)**
C Field current cable min. cross-section (A_F) and max. length, **(with single shielding for IFC 020 F)**, see Table
D High-temperature silicone cable, 3 × 1.5 mm^2 (14 AWG) Cu, (with single shielding, max. length 5 m (16 ft)
E High-temperature silicone cable, 2 × 1.5 mm^2 (14 AWG) Cu, max. length 5 m (16 ft)
A_F Cross section of field current line C in Cu, see table
L Cable length
κ Electrical conductivity of the process liquid
ZD Intermediate connection box required in connection with cables D and E for primary heads ALTOFLUX IFS 4000 F, PROFIFLUX IFS 5000 F and VARIFLUX IFS 6000 F in cases where process temperatures exceed 150 °C (302 °F)

Recommended length of signal cable A (Type DS) **and B** (Type BTS)
(Signal cable B, Type BTS, for **IFC 020 E** only)

Primary head	**Meter size**		**Signal cable**	
	DN mm	inch	**A**	**B**
AQUAFLUX F	10 - 1000	3/8 - 40	A1	B1
ECOFLUX IFS 1000 F	10 - 15	3/8 - 1/2	A4	B3
	25 - 150	1 - 6	A3	B2
ALTOFLUX IFS 2000 F	150 - 250	6 - 10	A1	B1
ALTOFLUX IFS 4000 F	10 - 150	3/8 - 6	A2	B2
	200 - 1000	8 - 40	A1	B1
PROFIFLUX IFS 5000 F	2.5 - 15	1/10 - 1/2	A4	B3
	25 - 100	1 - 4	A2	B2
VARIFLUX IFS 6000 F	2.5 - 15	1/10 - 1/2	A4	B3
	25 - 80	1 - 3	A2	B2
ALTOFLUX M 900	10 - 300	3/8 - 12	A1	B1

Diagram A

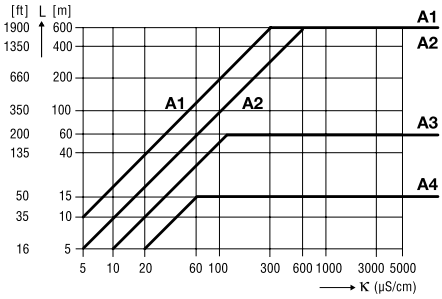

Diagram B (for IFC 020 E only)

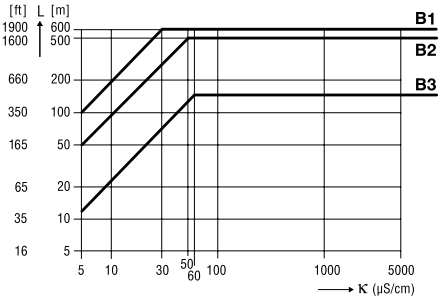

Field current cable C: (for **IFC 020 F** single shielding!)

Length		**Cross section A_F (Cu), minimum**
0 - 150 m	5 - 500 ft	2 × 0.75 mm^2 Cu / 2 × 18 AWG
150 - 300 m	500 - 1000 ft	2 × 1.50 mm^2 Cu / 2 × 14 AWG
300 - 600 m	1000 - 1900 ft	2 × 2.50 mm^2 Cu / 2 × 12 AWG

Important information on connection diagrams PLEASE NOTE!

- The figures in brackets indicate the stranded drain wires for the shields, see cross-sectional drawing of signal cable in Section 1.3.1.
- **Electrical connection to VDE 0100** ”Regulations governing heavy-current installations with line voltages up to 1000 V“ or equivalent national regulations.
- **PE** = protective conductor **FE** = functional ground conductor

I Process temperature < 150 °C (302 °F)

IFC 020 F

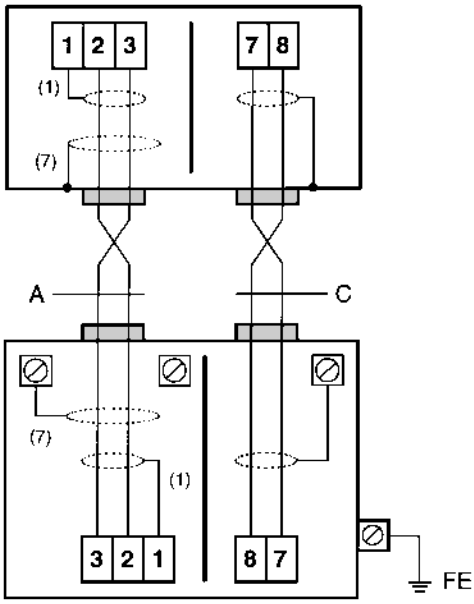

Primary heads

Connection of shields at the IFC 020 F

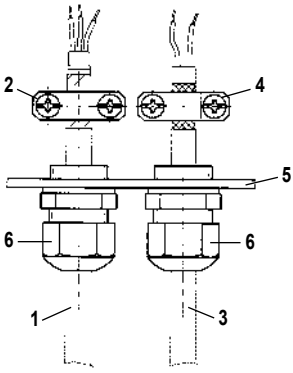

1 Signal cable A (Type DS)
2 Shield terminal for shielded signal cable
3 Field power cable
4 Shield terminal for shielded field power cable
5 Housing wall, signal converter
6 Cable entries

II Process temperature > 150 °C (302 °F)

IFC 020 F

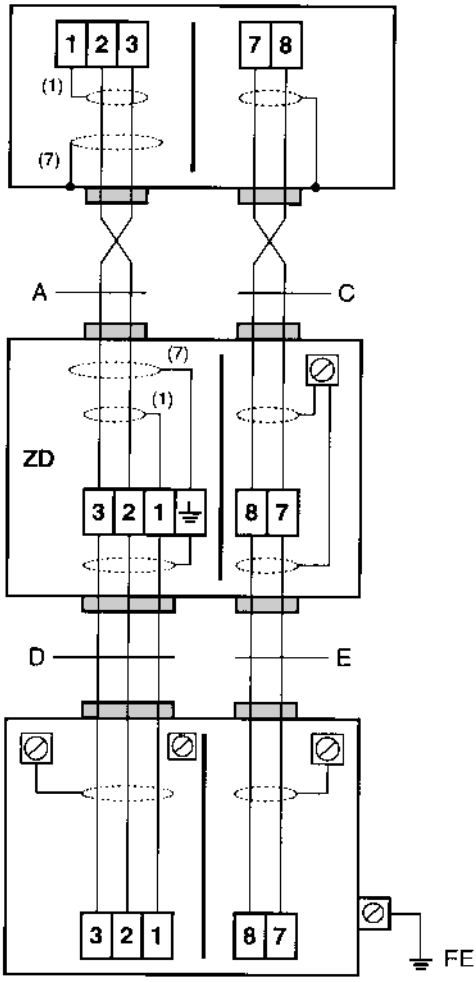

Primary heads

1.3.6 Connection diagrams III to VI (IFC 020 E signal converter and primary head)

Important information on connection diagrams PLEASE NOTE!

- The figures in brackets indicate the stranded drain wires for the shields (see cross-sectional drawing of signal cable in Section 1.3.1).
- **Electrical connection to VDE 0100** "Regulations governing heavy-current installations with line voltages up to 1000 V" **or equivalent national regulations.**
- **24 V DC power supply** (in preparation)**:** Functional extra-low voltage with protective separation in conformity with VDE 0100, Part 410 or equivalent national regulations.
- **For IFC 020 E, please note:** The internal bridges marked with * are needed for power supply > 100 V AC only.
- **PE** = Protective conductor **FE** = Functional ground conductor

Process temperature **< 150 °C (302 °F)**

III Signal cable A (type DS)

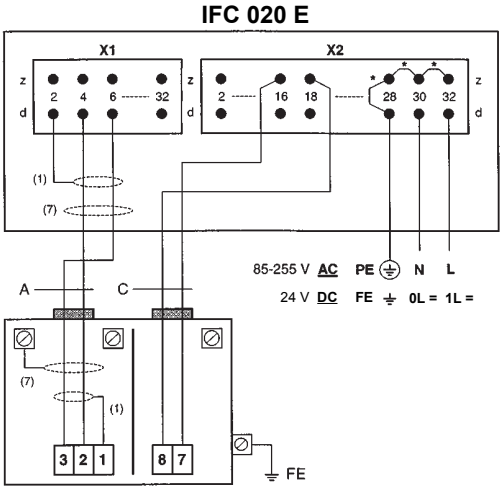

Primary head

IV Signal cable B (type BTS)

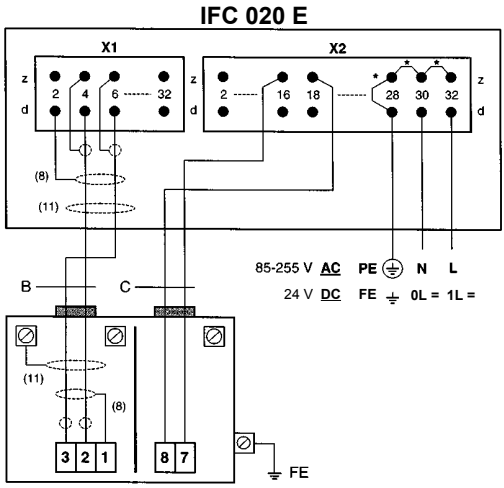

Primary head

Process temperature **> 150 °C (302 °F)**	
V Signal cable A (type DS)	**VI** Signal cable B (type BTS)
IFC 020 E	**IFC 020 E**

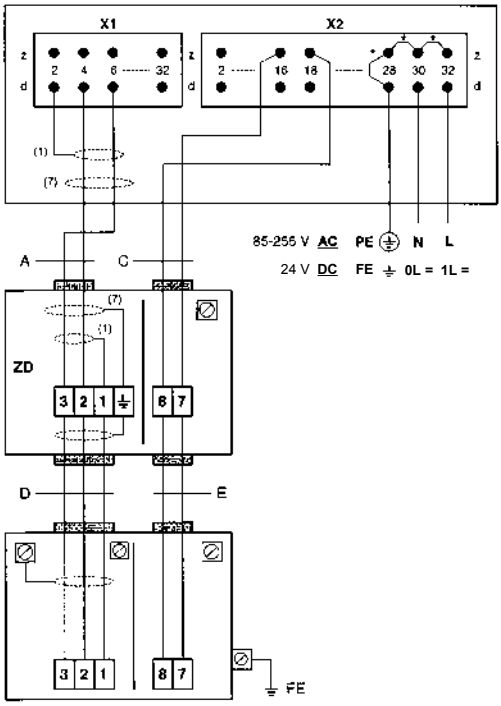

Primary head

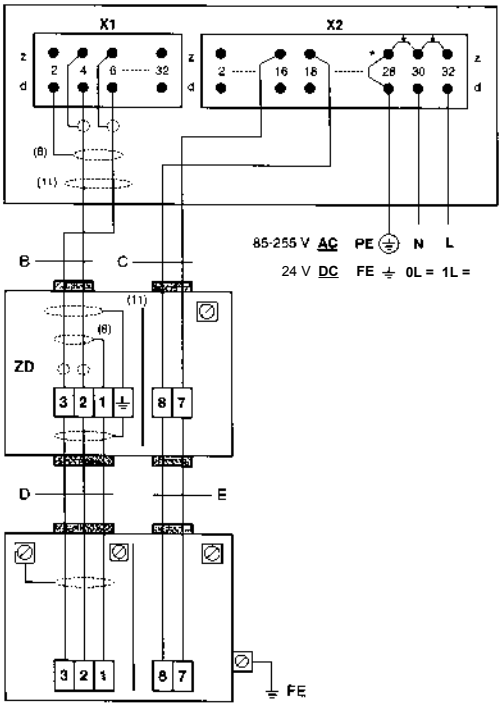

Primary head

2 Electrical connection of outputs and inputs

2.1 Current output I

- The current output is galvanically isolated from all input and output circuits.
- Factory-set data and functions can be noted down in Sect. 5.16.
  Please also refer to Sect. 3.2 “Factory settings”.
- Typical current output

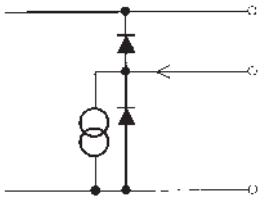

I+ approx. 15 V DC positive voltage of current output

I current sink

I⊥ chassis ground, current output

- All operating data and functions can be set: Operation see Section 4 and 5.6 Function 1.05.
- The current output can also be used as an internal voltage source for the outputs.
  U_{int} = 15 V DC I = 23 mA when operated **without** receiver instruments at the current output
  I = 3 mA when operated **with** receiver instruments at the current output
- **Connection diagrams,** see Sect. 2.4: diagrams ① ② ④ ⑥
- **For connection and operation with HART®-interface see Section 6.1.**

2.2 Pulse output P and status output S

- The pulse and status outputs are galvanically isolated from the current output and all input circuits.
- Factory-set data and functions can be noted down in Sect. 5.16.
  Please also refer to Sect. 3.2 “Factory settings”.
- Typical pulse and status outputs

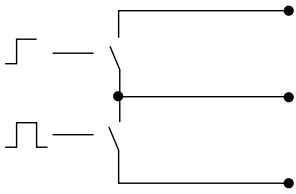

S status output

P⊥ chassis ground

P pulse output

- All operating data and functions can be set: Operation
  see Section 4 and 5.7 Function 1.06 and 1.07.
- The pulse and status outputs can be operated in the active or passive mode.
  Active mode: The current output is the internal voltage source, connection of electronic totalizers (EC)
  Passive mode: External DC or AC voltage source required, connection of electronic (EC) or electromechanical (EMC) totalizers
- Digital pulse division, interpulse period is non-uniform. Therefore, if frequency meters or cycle counters are connected, allow for minimum counting interval:

  gate time, counter $\leq \frac{1000}{P_{100\%}\ [\text{Hz}]}$
- **Connection diagrams** see Sect. 2.4: diagrams - pulse output ③ ④
  diagrams - status output ⑤ ⑥

- **Characteristics of the status outputs**

	Switch open	Switch closed
OFF (switched off)	**without function**	
ON (e.g. operation indicator)	Power supply OFF	Power supply ON
F/R INDICATOR (F/R mode)	**F**orward flow	**R**everse flow
TRIP POINT (Limit switch)	Inactive	Active
ALL ERRORS (all errors)	Errors	No errors
FATAL ERRORS (fatal errors only)	Errors	No errors

Control input E (**with IFC 020 E** only) **2.3**

- The control inputs are galvanically isolated from the current output and all input circuits.

- Setting data and functions can be noted down in Section 5.16.
  Please also refer to Sect. 3.2 “Factory settings”.

- Typical current input E

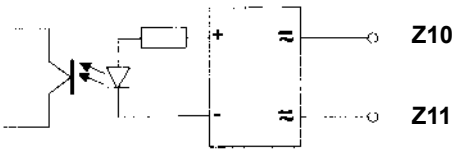

- All operating data and functions can be set:
  Operation see Section 4 and 5.18 Fct. 1.08.

- The control inputs must be operated in the passive mode.

- **Function of the control inputs**

OFF	switched off
TOTAL.RESET	reset totalizer(s)
ERROR.RESET	delete error messages
OUTP. HOLD	hold value of outputs

Connection diagram, see Sect. 2.4: diagram ⑦

2.4 Input / output connection diagrams

Terminal identification

E: X2	IFC 020 **E**	separated, 19” plug-in unit, connection cap **X2**
F	IFC 020 **F**	separated, field housing
K	IFC 020 **K**	compact

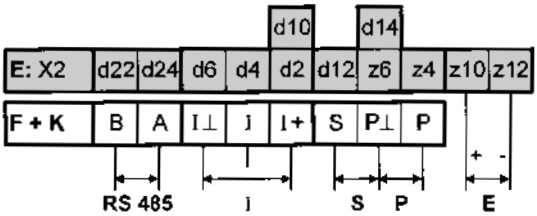

I Current output **C** Control input (**IFC 020 E** only)
P Pulse output
S Status output **RS 485** Interface

Totalizer
- electronic (EC)
- electromechanical (EMC)

Milliammeter
0 or 4-20mA and others

Key, N/O contact

External voltage source (U_{ext}),
DC or AC voltage,
connection polarity arbitrary

DC voltage,
external power source (U_{ext}),
note connection polarity

---

(1) **Current output I_{active}**

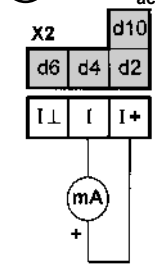

I = 0/4 - 20 mA
R_i ≤ 500 Ω

(2) **Current output $I_{passive}$**

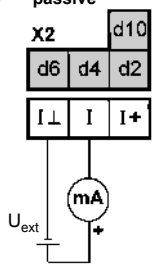

I = 0/4 - 20 mA

U_{ext}	15...20 V DC	20...32 V DC
R_i	0...500 Ω	250...750 Ω

For connection and operation of the HART® interface, see Section 6.1. Load at HART® operation ranges between min. 250 Ω and max. 500 Ω.

Active mode

The current output supplies the power for operation of the outputs and inputs.

Passive mode

External power source required for operation of the outputs and inputs.

---

(3) **Pulse output $P_{passive}$**
for electronic (EC) or
electromechanical (EMC) totalizers

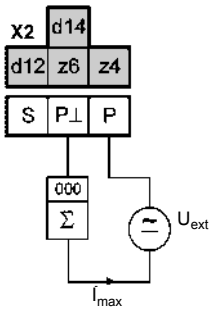

U_{ext} ≤ 30 V DC/≤ 24 V AC
I_{max} ≤ 150 mA
(incl. status output S)

(4) **Pulse output P_{active}** (and current output I_{active})
for electronic (EC) totalizers
with and **without** current output I

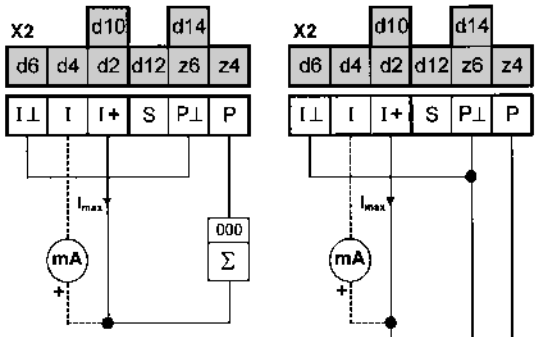

U_{int} ≤ 15 V DC from current output
Operation **with** current output:
I_{max} ≤ 3 mA
Operation **without** current output:
I_{max} ≤ 23 mA

$$R \leq \frac{15\ V}{I_{max}}$$

5 Status output $S_{passive}$

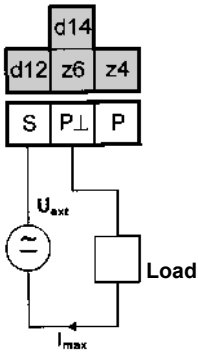

U_{ext} ≤ 30 V DC/≤ 24 V AC
I_{max} ≤ 150 mA
(incl. pulse output P)

6 Status output S_{active} with and without current output I

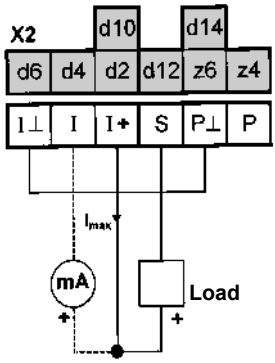

U_{int} ≤ 15 V DC from current output

I_{max} ≤ 3 mA
Operation **with** current output

I_{max} ≤ 23 mA
Operation **without** current output

7 Control input $E_{passive}$ (**IFC 020 E** only)

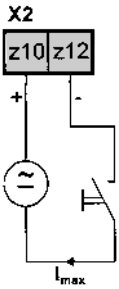

U_{ext} ≤ 30 V DC/≤ 24 V AC
I_{max} ≤ 6 mA

8 RS 485 Interface

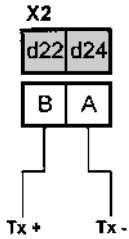

For connection and operation of the **Krohne RS 485 Interface,** see Section 6.2.

3 Start-up

3.1 Power-on and measurement

- Before powering the system, please check that it has been correctly installed according to Sect. 1 and 2.
- The flowmeter is delivered ready for operational use. All operating data have been factory set in accordance with your specifications.
  Please refer to Sect. 3.2 “factory settings”.
- Power the unit, and the flowmeter will immediately start process flow measurement.
- When powered, the display shows in succession: START UP and READY.
  This is followed by display of the current flow rate and/or the current totalizer count on either a continuous or alternating basis, depending on the setting under Fct. 1.04.
- Refer to Sect. 4 and 5 for operator control of the “display version”.

3.2 Factory setting

All operating data are factory set according to your order specifications.

If you have not made any particular specifications at the time of ordering, the instruments will be delivered with the standard parameters and functions listed in the Table below.

To facilitate easy and rapid initial start-up, current output and pulse output are set to process flow measurement in “2 flow directions”, so that the current flowrate is displayed and the volumetric flow counted independent of the flow direction. On instruments equipped with a display, measured values may possibly be shown with a “ – ” sign.

This factory setting for the current and pulse outputs may possibly lead to measuring errors, particularly in the case of volume flow counting:

for example, if pumps are switched off and a “backflow” occurs which is not within the range of the low-flow cutoff (SMU), or if separate displays and counts are required for both flow directions.

To avoid faulty measurements, therefore, it may be necessary to change the factory setting of some or all of the following functions:
– low-flow cutoff SMU, Fct. 1.03, Sect. 5.3
– current output I, Fct. 1.05, Sect. 5.6
– pulse output P, Fct. 1.06, Sect. 5.7
– display (option), Fct. 1.04, Sect. 5.4

Operation see **Section 4 and 5.**

Standard factory settings

Function		Setting
1.01	Full-scale range $Q_{100\%}$	see nameplate
1.02	Time constant	3 s, for I, S and display
1.03	Low-flow cutoff SMU	ON: 1 % OFF: 2 %
1.04	Display (option) flow rate totalizer(s)	 m^3/hr or US Gal/min m^3 or US Gal
1.05	Current output I function range error message	 2 directions 4 - 20 mA 22 mA
1.06	Pulse output P function pulse value pulse width	 2 directions 1 pulse/s 50 ms
1.07	Status output S	flow directions

Function		Setting
1.08	Control input	off
3.01	Language for display only	English
3.02	Flowmeter diameter flow direction (see arrow on primary head)	 see nameplate } + direction
3.04	Entry code	no
3.05	User unit	Liter/hr or US MGal/day
3.06	Application	steady
3.07	Measuring point	Altometer
3.08	Communication interface	off

Here you can note down the settings of the signal converter !

Fct. No.	Function	Settings
1.01	**Full-scale range**	
1.02	**Time constant**	
1.03	**Low-flow cut-off**	- ON: - OFF:
1.04	**Display**	Flow
		Totalizer
		Messages
1.05	**Current output I**	Function
		Range I
		Error
1.06	**Pulse output P**	Function
		Selection
		Pulse width
		Value
1.07	**Status output S**	
1.08	**Control input E** (IFC 020 E only)	
3.01	**Language**	
3.02	**Primary head**	Meter size
		GK value
		Field frequency
		Power frequency
		Flow direction
3.04	**Entry code required ?**	- no - yes
		→ → → ↲ ↲ ↲ ↑ ↑ ↑
3.05	**User-defined unit**	
3.06	**Application**	Flow is - steady
		- pulsating
3.07	**Measuring point**	
3.08	**Communication interface**	☐ Off
		☐ HART
		☐ KROHNE RS 485
		Address
		Baud rate

4 Operation of the signal converter

4.1 Krohne operator control concept

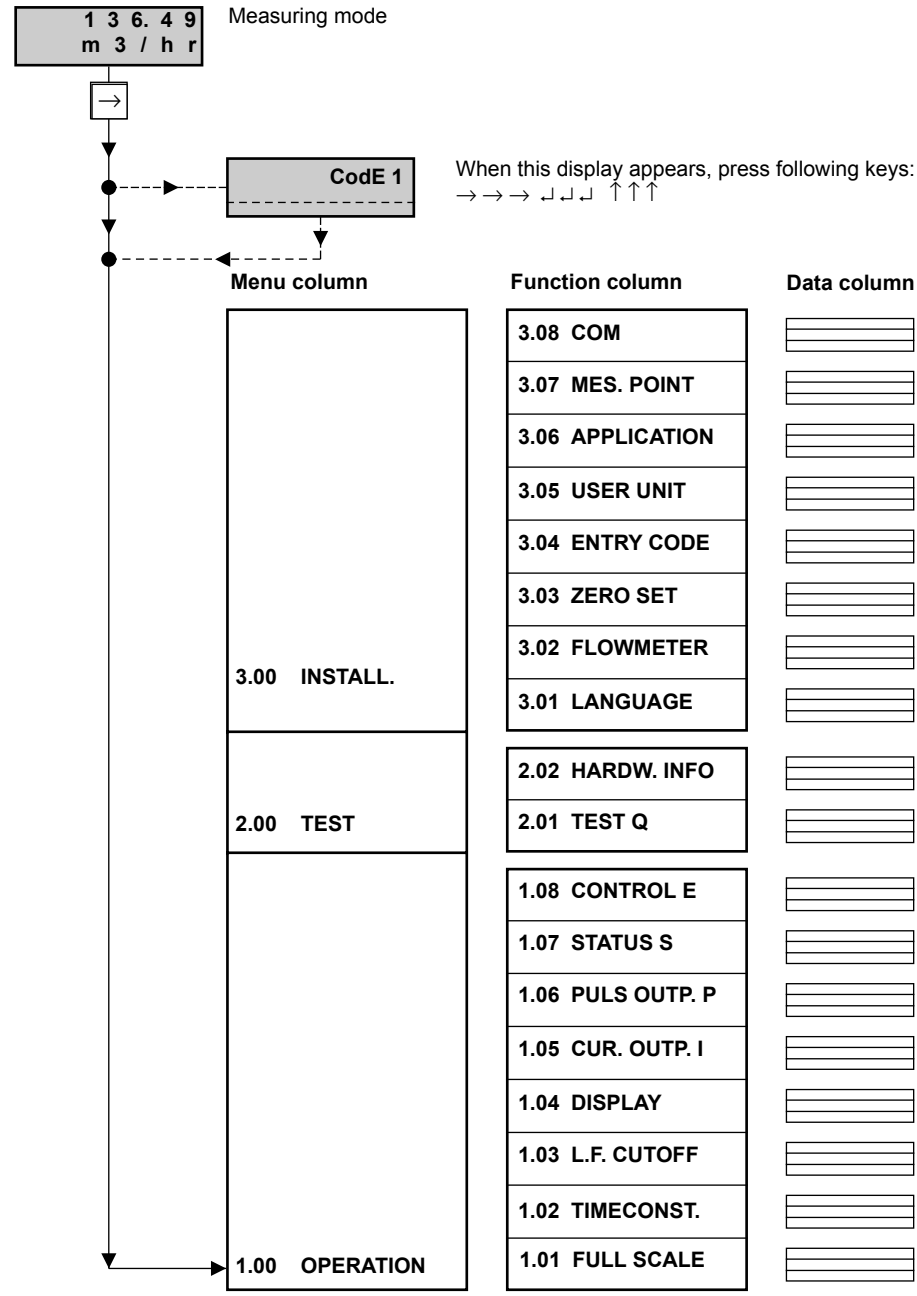

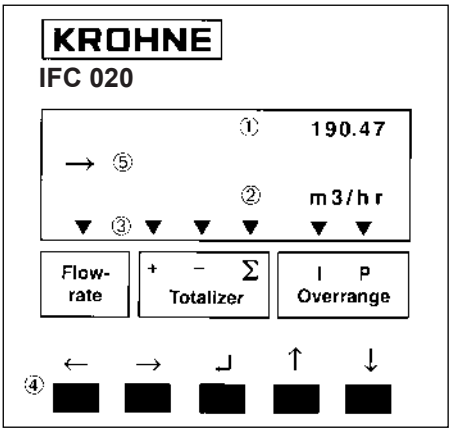

The controls are accessible after unscrewing the 4 screws and removing the housing cover.

① Display, 1st line

② Display, 2nd line

③ Display, 3rd line: arrows to identify display

Flowrate		current flowrate
Totalizer	+	totalizer
	–	totalizer
	Σ	sum totalizer (+ and –)
Overrange	**I**	overranging, current output I
	P	overranging, pulse output P

④ Keys for operator control of signal converter

⑤ Compass field, signals actuation of a key.

4.3 Function of keys

The **cursor** (flashing part of display) has a **grey** background in the following descriptions.

To start operator control

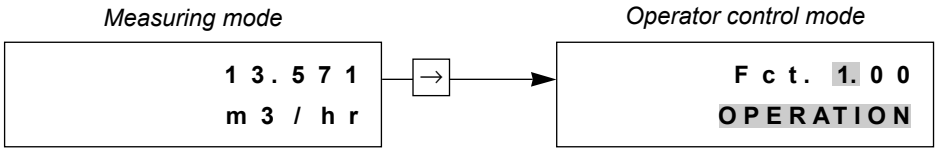

PLEASE NOTE: When **"YES"** is set under **Fct. 3.04 ENTRY CODE,** **"CodE 1 - - - - - - - - -"** appears in the display after pressing the → key.
The 9-keystroke Entry Code 1 must now be entered: → → → ↵ ↵ ↵ ↑ ↑ ↑
(each keystroke acknowledged by "*").

To select a function

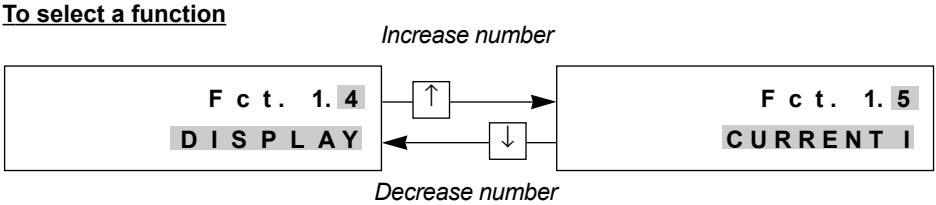

To select a sub function

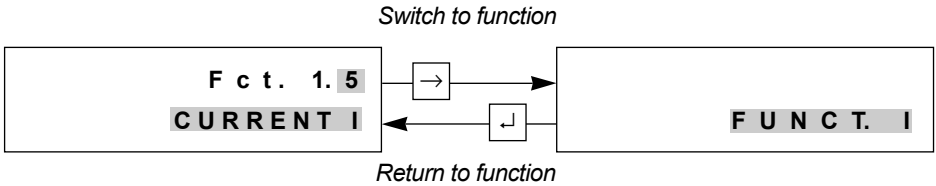

To terminate operator control
Press key ↵ repeatedly until one of the following menus
Fct. 1.00 OPERATION, Fct. 2.00 TEST or **Fct. 3.00 INSTALL.** is displayed.

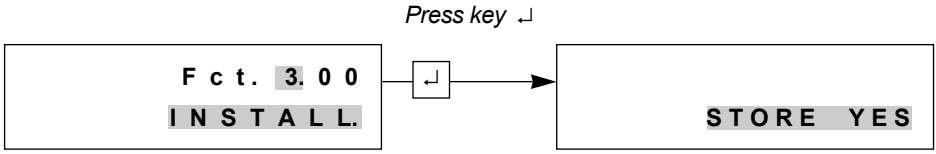

Store new parameters: *acknowledge by pressing key ↵. Measuring mode continued with the new parameters.*

New parameters not to be stored:
press key ↑ to display *„STORE.NO".*
Measuring mode continued with the „old" parameters after pressing key ↵.

To change numbers

increase number

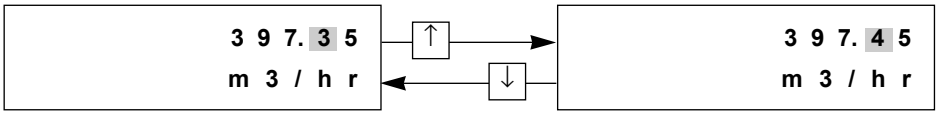

decrease number

To shift cursor (flashing position)

shift to right

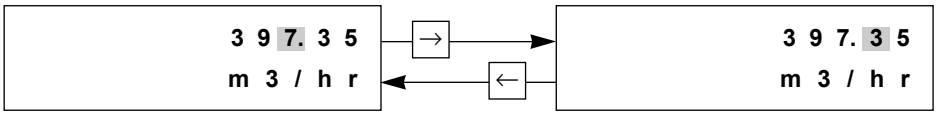

shift to left

To alter texts (units)

For units, the numerical value is converted automatically.

select next text

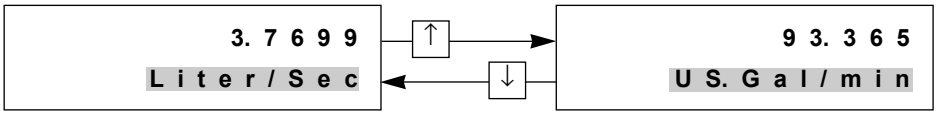

select preceding text

To transfer from text (unit) to number setting

Change to number setting

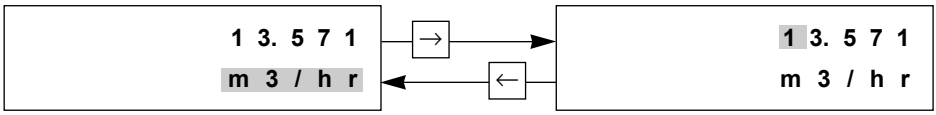

Return to text setting

To transfer to subfunction

Subfunctions do not have a “Fct.No.“ and are identified by a “ → ”.

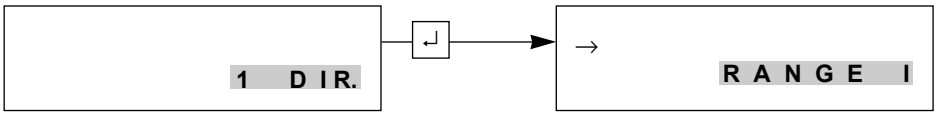

To revert to function display

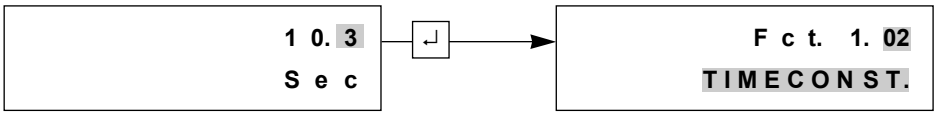

4.4 Table of settable functions

Abbreviations used

C	Control input (IFC 020 E only)
DN	Nominal size, meter size
F_{max}	Highest frequency of pulse output
F_{min}	Lowest frequency of pulse output
F_M	Conversion factor volume for any unit, see Fct. "FACT. VOL."
F_T	Conversion factor time for any unit, see Fct. 3.05 "FACT. Time"
GK	Primary constant
I	Current output
$I_{0\%}$	Current at 0% flow
$I_{100\%}$	Current at 100% flow
P	Pulse output
P_{max}	$= F_{max} / Q_{100\%}$
P_{min}	$= F_{min} / Q_{100\%}$
Q	actual flowrate
$Q_{100\%}$	100% flow = full scale range
Q_{max}	$= \frac{\pi}{4}$ DN² x v_{max} / max. full-scale range ($Q_{100\%}$) at v_{max} = 12 m/s / 40 ft/s
Q_{min}	$= \frac{\pi}{4}$ DN² x v_{min} / min. full-scale range ($Q_{100\%}$) at v_{min} = 0.3 m/s / 1 ft/s
S	Status output
SMU	Low-flow cutoff for I and P
v	Flow velocity
v_{max}	Max. flow velocity (12 m/s / 40 ft/s) at $Q_{100\%}$
v_{min}	Min. flow velocity (0.3 m/s / 1 ft/s) at $Q_{100\%}$
F/R	Forward/Reverse flow at F/R operation

Fct.	Text	Description and settings
1.00	**OPERATION**	**Operations menu**
1.01	**FULL SCALE**	**Full-scale range for flowrate $Q_{100\%}$** Select unit • m3/hr • Liter/Sec • US.Gal/min • user unit, factory set is "Liter/hr" or "US MGal/day" (see Fct. 3.05) *Press → key to transfer to number setting.* Setting ranges The ranges are dependent on the meter size (DN) and the flow velocity (v): $Q_{min} = \frac{\pi}{4}$ DN² x v_{min} $Q_{max} = \frac{\pi}{4}$ DN² x v_{max} Nom. dia./meter size — v_{min} = 0,3 m/s (1 ft/s) — v_{max} = 12 m/s (40 ft/s) • DN 2.5–1000 / 1/10"–40": 0.0053 – 33 900 m³/hr 0.0237 – 152 000 US.Gal/min *Press ↵ key to return to Fct. 1.01 FULL SCALE.*
	→ **VALUE P**	**Pulse value** (Fct. 1.06 *"VALUE P"*) **has been changed.** With the "old" pulse values the output frequency (F) would have been exceeded or not reached. $P_{min} = F_{min} / Q_{100\%}$ $P_{max} = F_{max} / Q_{100\%}$ **Check new values!**
1.02	**TIMECONST.**	**Time constant** Select: • ALL (applies to display and all outputs) • ONLY I+S (only display, current and status outputs) *Press ↵ key to transfer to number setting.* Range: • 0.2 – 99.9 Sec *Press ↵ key to return to Fct. 1.02 TIMECONST.*
1.03	**L.F.CUTOFF**	**Low-flow cutoff** (SMU) • OFF (fixed values: ON = 0.1% / OFF = 0.2% at 100Hz and 1000Hz, see Fct. 106, 1% resp. 2%) • PERCENT (variable values) ON 1 – 19% OFF 2 – 20% *Press → key to transfer to number setting.* Note: Cutoff "off" value must be greater than cutoff "on" value. *Press ↵ key to return to Fct. 1.03 L.F. CUTOFF.*

Fct.	Text	Description and settings
1.04	**DISPLAY**	**Display functions**
	→ **DISP.FLOW**	**Select flow display** • NO DISP. • user unit, factory set is “Liter/hr” or “US MGal/day (see Fct. 3.05) • m3/hr • PERCENT • Liter/Sec • BARGRAPH (value and bargraph display in %) • US.Gal/min *Press ↵ key to transfer to subfunction “DISP. TOTAL.”.*
	→ **DISP.TOTAL.**	**Select totalizer display** • NO DISP. (totalizer switched on but not displayed) • OFF (totalizer switched off) • +TOTAL • –TOTAL • ±TOTAL • SUM (Σ) • ALL (single totalizer or all) *Press ↵ key to transfer to display unit* • m3 • Liter • US.Gal • user unit, factory set is “Liter” or “US MGal” (see Fct. 3.05). *Press → key to transfer to format setting.* Format setting • **Auto** (exponent notation) • # . ####### • ##### . ### • ## . ###### • ###### . ## • ### . ##### • ####### . # • #### . #### • ######## *Press ↵ key to transfer to subfunction “DISP.MSG”.*
	→ **DISP.MSG.**	**Additional messages required in measuring mode?** • NO • YES (cyclic change with displays of measured values) *Press ↵ key to return to Fct. 1.04 DISPLAY.*
1.05	**CURRENT I**	**Current output I**
	→ **FUNCT. I**	**Select function for current output I** • OFF (switched off) • 1 DIR. (1 flow direction) • 2 DIR. (forward/reverse flow, F/R flow measurement) *Press key ↵, transfer to subfunction* “RANGE I”;
	→ **RANGE I**	**Select measuring range** • 0 - 20 mA • 4 - 20 mA (fixed ranges) • mA (user-defined range) $I_{0\%}$ - $I_{100\%}$ (Value $I_{0\%} < I_{100\%}$!) 0 - 16 mA 4 - 20 mA *To transfer to number setting, press key → !* *Press key ↵ to transfer to subfunction* “I ERROR“.
	→ **I ERROR**	**Select error value** • 22 mA • 0.0 to $I_{0\%}$ mA (variable, see above if $I_{0\%}$ > 1 mA) *To transfer to number setting, press key → !* *Press key ↵ to revert to* Fct. 1.05 CURRENT. I.

Fct.	Text	Description and settings
1.06	**PULS B1**	**Pulse output P**
	→ **FUNCT. P**	**Select function for pulse output P** • OFF (switched off) • 1 DIR. (1 flow direction) • 2 DIR. (forward/reverse flow, F/R flow measurement) *Press key ↵ to transfer to subfunction* "SELECT P".
	→ **SELECT P**	**Select pulse type** • 100 HZ • PULSE/VOL. (pulses per unit volume, flowrate) • 1000 HZ • PULSE/TIME (pulses per unit time for 100% flowrate) *Press key ↵ to transfer to subfunction* "PULSWIDTH". With selection 100 HZ and 1000 HZ, return to Fct.1.06 PULSOUTPUT P (pulswidth 50% cyclic).
	→ **PULSWIDTH**	**Select pulse width** • 50 msec • 100 msec • 200 msec • 500 msec • 1 sec *Press key ↵ to transfer to subfunction* "VALUE P".
	→ **VALUE P**	**Set pulse value per unit volume** (appears only when "PULSE/VOL." set under "SELECT P" above) • xxxx PulS/m3 • xxxx PulS/Liter • xxxx PulS/US.Gal • xxxx PulS/ user-defined unit, factory-set is "Liter" or "US M.Gal" (see Fct. 3.05) Setting range "xxxx" is dependent on the pulse width and the full-scale range: $\mathbf{P_{min}} = F_{min} / Q_{100\%}$ $\mathbf{P_{max}} = F_{max} / Q_{100\%}$ *Press key ↵ to return to* Fct. 1.06 "PULS. OUTPUT P".
	→ **VALUE P**	**Set pulse value per unit time** (appears only when "PULSE/TIME" set under "SELECT P" above) • xxxx PulSe/Sec (=Hz) • xxxx PulSe/min • xxxx PulSe/hr • xxxx PulSe/user-defined unit, factory-set is "hr" (see Fct. 3.05) Setting range "xxxx" is dependent on the pulse width, see above *Press key ↵ to return to* Fct. 1.06 "PULS. OUTPUT P"".
1.07	**STATUS. S**	**Status output S** • ALL ERROR • FATAL ERROR • OFF • ON • F/R INDIC. (F/R indication for forward/reverse measurement) • TRIP. POINT <u>Setting range:</u> 002 - 115 PERCENT *Press ↵ key to transfer to number setting* *Press ↵ key to return to Fct. 1.07 "STATUS. S".*
1.08	**CONTROL E** (IFC 020 E only)	**Control input E** (IFC 020 E only) • OFF (switched off) • OUTP. ZERO (set outputs to "min.values") • TOTAL. RESET (reset totalizers) • ERROR. RESET(delete error messages) *Press ↵ key to return Fct. 1.08 "Control E".*

Fct.	Text	Description and settings
2.00	**TEST**	**Testmenu**
2.01	**TEST Q**	**Test measuring range Q** <u>Precautionary query</u> • SURE NO *Press ↵ key to return to Fct. 2.01 "TEST Q".* • SURE YES *Press ↵ key, then use ↑ or ↓ key to select value:* -110 / -100 / -50 / -10 / 0 / +10 / +50 / +100 / +110 PCT. of set full-scale range $Q_{100\%}$. Displayed value present at outputs I and P. *Press ↵ key to return to Fct. 2.01 "TEST Q".*
2.02	**HARDW. INFO**	**Hardware information and error status** Before consulting factory, please note down all 6 codes.
	→ **MODUL ADC**	X . X X X X X . X X Y Y Y Y Y Y Y Y Y Y *Press ↵ key to transfer to* "MODUL IO".
	→ **MODUL IO**	X . X X X X X . X X Y Y Y Y Y Y Y Y Y Y *Press ↵ key to transfer to* "MODUL DISP.".
	→ **MODUL DISP.**	X . X X X X X . X X Y Y Y Y Y Y Y Y Y Y *Press ↵ key to transfer to* "MODUL RS
	→ **MODUL RS**	X . X X X X X . X X Y Y Y Y Y Y Y Y Y Y *Press ↵ key to return to Fct. 2.02* "HARDW. INFO".

Fct.	Text	Description and settings
3.00	**INSTALL.**	**Installation menu**
3.01	**LANGUAGE**	**Select language for display texts** • GB / USA (English) • F (French) • D (German) • others on request *Press ↵ key to return to Fct. 3.01* "LANGUAGE".
3.02	**FLOWMETER**	**Set data for primary head**
	→ **DIAMETER**	**Select size from meter size table** • DN 2.5 - 1000 mm equivalent to $^1/_{10}$ - 40 inch *Select with ↑ or ↓ key.* *Press ↵ key to transfer to subfunction "FULL SCALE".*
	→ **FULL SCALE**	**Full-scale range for flow $Q_{100\%}$** To set, refer to Fct. 1.01 "FULL SCALE" above. *Press ↵* key to transfer to subfunction "GK VALUE".
	→ **VALUE P**	**Pulse value** (Fct. 1.06 *"VALUE P"*) **has been changed.** With the "old" pulse values the output frequency (F) would have been exceeded or not reached. $\mathbf{P_{min}} = F_{min} / Q_{100\%}$ $\mathbf{P_{max}} = F_{max} / Q_{100\%}$ **Check new values!**
	→ **GK VALUE**	**Primary head - Set primary constant GK** see primary head nameplate. Range: • 1.0000 - 9.9999 *Press ↵ key to transfer to subfunction* "FIELD. FREQ.".
	→ **FIELD FREQ.**	**Magnetic field frequency** Values: 1/6 and 1/18 of power frequency, see nameplate. *Press ↵ key to transfer to subfunction "FLOW DIR.";* DC units only: to transfer to subfunction *"LINE FREQ.".*
	→ **LINE FREQ.**	**Normal line frequency in your country** Please note: This function is only provided for units with DC power supply 24 V DC to suppress line-frequency interference. Values: *50 Hz* and *60 Hz* *Press ↵ key to transfer to subfunction "FLOW DIR.".*
	→ **FLOW DIR.**	**Define flow direction** (in F/R mode: forward flow). Set according to direction of arrow on primary head: • + DIR. • – DIR. *Select using ↑ or ↓ key.* *Press ↵ key to return to Fct. 3.02 "FLOWMETER".*
3.03	**ZERO SET**	**Zero calibration** Note: Carry out only at "0" flow and with completely filled measuring tube! Precautionary query • CALIB. NO *Press ↵ key to return to Fct. 3.03 "ZERO SET".* • CALIB. YES Press ↵ *key to start calibration.* Duration approx. 15-90 seconds, (depends on frequency of magnetic field) current flowrate displayed in the selected unit (see Fct. 1.04 "DISP. FLOW"). *A "WARNING" sign appears when flowrate "> 0"; acknowledge by pressing ↵ key.* • STORE NO (do **not** store new zero value) • STORE YES (store new zero value) *Press ↵ key to return to Fct. 3.03 "ZERO SET".*
3.04	**ENTRY CODE**	**Entry code required to enter setting mode?** • NO (= entry with → only) • YES (= entry with → and Code 1: → → → ↵ ↵ ↵ ↑ ↑ ↑) *Press ↵ to return to Fct. 3.04 "ENTRY CODE".*

Fct.	Text	Description and settings
3.05	**USER UNIT**	**Set any required unit for flowrate and counting**
	→ **TEXT VOL.**	**Set text for required flowrate unit** (max. 5 characters) Factory-set: “Liter” or “MGal”. Characters assignable to each place: • A-Z, a-z, 0-9, or “ – “ (= blank character). *Press ↵ key to transfer to subfunction “FACT. VOL.”*
	→ **FACT. VOL.**	**Set conversion factor (F_M) for volume** Factory set “1.00000 E+3” for “Liter” or “2.64172E-4” for “US MGal” (exponent notation, here: 1×10^3 or 2.64172×10^{-4}). Factor F_M = volume per $1m^3$. Setting range • 1.00000 E-9 to 9.99999 E+9 (= 10^{-9} to 10^{+9}) *Press ↵ key to transfer to subfunction “TEXT TIME”.*
	→ **TEXT TIME**	**Set text for required time unit** (max. 3 characters) Factory-set: “hr” (=hour). Characters assignable to each place: • A-Z, a-z, 0-9, or “ – “ (= blank character). *Press ↵* key to transfer to subfunction “FACT. TIME”
	→ **FACT. TIME**	**Set conversion factor (F_T) for time** Factory-set: “3.60000 E+3” for “hour” or “8.64000 E+4” for “day” (exponent notation, here: 3.6×10^3 or 8.64×10^{-4}). Set factor F_T in seconds. Setting range • 1.00000 E-9 to 9.99999 E+9 (= 10^{-9} to 10^{+9}) *Press ↵ key to return to Fct. 3.05 “USER UNIT”.*
3.06	**APPLICAT.**	**Set overload point for A/D converter**
	→ **FLOW**	• STEADY (150% of $Q_{100\%}$) • PULSATING (1000% of $Q_{100\%}$) *Press key ↵ to return to* Fct. 3.06 “APPLICAT.“,
3.07	**MEASURING POINT**	Set measuring point no. Factory setting: ALTOMETER Characters assignable to each place: • A-Z, a-z, 0-9, or “ – “ (= blank character). *Press ↵* key to return to Fct. 3.07 ”MEASURING POINT”
3.08	**COM**	**Set comminucation interface** • OFF (switched off) • HART (HART-interface switched on) • KROHNE (RS 485 interface switched on) • Address:”HART” 00-15 / “KROHNE” 000-239 • BAUD RATE: -1200 -2400 -4800 -9600 -19200 (appears with selection “KROHNE” only) *Press key ↵ to return to* Fct. 3.08 “COM”.

The following list gives all errors that can occur during process flow measurement.
Errors shown in display when “YES“ set in Fct. 1.04 DISPLAY, subfunction “DISP. MSG.“.

Error messages	Description of error	Error clearance
LINE INT.	Power failure Note: no counting during power failure	Cancel error in RESET/QUIT. menu Reset totalizer if necessary.
CUR. OUTP. I	Current output overranged. (Flow > measuring rage)	Check and if necessary correct instrument parameters. After elimination of cause, error message deleted automatically.
PULSOUTP. P	Pulse output overranged. Note: totalizer deviation possible.	Check and if necessary correct instrument parameters. After elimination of cause, error message deleted automatically.
TOTALIZER	Totalizer has been reset	Cancel error message in RESET/QUIT. menu, see Section 4.6.
ADC	Analog / digital converter overranged	Error message deleted automatically after elimination of cause.
FATAL. ERROR	Fatal error, all outputs set to “min. values“	Please consult factory.

4.6 Reset totalizer and cancel error messages, RESET / QUIT menu

Cancel error messages in RESET / QUIT menu

Key	Display		Description
	- - - - - - -	- - - - - / - - -	Measuring mode
↵	**CodE 2**	- -	Key in entry code 2 for RESET / QUIT menu: ↑ →
↑ →		**ERROR QUIT.**	Menu for error acknowledgement
→		**QUIT. NO**	Do **not** delete error messages, press ↵ twice = return to measuring mode
↑		**QUIT. YES**	Delete error messages
↵		**ERROR QUIT.**	Error messages deleted
↵	- - - - - - -	- - - - - / - - -	Return to measuring mode

Reset totalizer(s) in RESET / QUIT menu

Key	Display		Description
	- - - - - - -	- - - - - / - - -	Measuring mode
↵	**CodE 2**	- -	Key in entry code 2 for RESET / QUIT menu: ↑ →
↑ →		**ERROR QUIT.**	Menu for error acknowledgement
↑		**TOTAL. RESET**	Menu for resetting totalizer
→		**RESET NO**	Do **not** reset totalizer, press ↵ twice = return to measuring mode
↑		**RESET. YES**	Reset totalizer
↵		**RESET QUIT.**	Totalizer reset
↵	- - - - - - -	- - - - - / - - -	Return to measuring mode

As an example the **cursor,** flashing part of display, is shown below in **bold** type.

- **Change measuring range of current output and value for error messages** (Fct. 1.05):
- Change measuring range from 04-20 mA to **00 -20 mA**
- Change value for error messages from 0 mA to **22 mA**

Key	Display		Description
→			If “YES” set under Fct. 3.04 ENTRY CODE, key in the 9-keystroke CODE 1 now: → → → ↵ ↵ ↵ ↑ ↑ ↑
	Fct. 1.00	**OPERATION**	
→	Fct. 1.**01**	**FULL SCALE**	
4x ↑	Fct. 1.**05**	**CURRENT I**	
→		FUNCT. I	
→ ↵		RANGE I	
→	**04-20**	mA	Old current range
↑	**00-20**	mA	New current range
↵		I ERROR	
→	**0**	mA	Old value for error messages
2x ↑	**22**	mA	New value for error messages
↵	Fct. 1.**05**	**CURRENT I**	
↵	Fct. 1.00	**OPERATION**	
↵		**STORE YES**	
↵	- - - - - - -	- - - - - / - - -	Measuring range with new data for the current output

5 Description of functions

5.1 Full-scale range $Q_{100\%}$

Fct. 1.01 FULL SCALE
Press → key.

Choice of unit for full-scale range $Q_{100\%}$
- **m3/hr** (cubic metres per hour)
- **Liter/Sec** (litres per second)
- **US.Gal/min** (US gallons per minute)
- User-defined unit, factory-set is **„Liter/hr“** (litres per hour) or **“US MGal/day”,** see Sect. 5.12.

Select with ↑ or ↓ key.
Use → key to transfer to numerical setting, 1st number (cursor) flashes.

Set full-scale range $Q_{100\%}$
The setting range is dependent on meter size (DN) and flow velocity (v).

$\mathbf{Q_{min}} = \frac{\pi}{4}\,DN^2 \times v_{min}$ $\mathbf{Q_{max}} = \frac{\pi}{4}\,DN^2 \times v_{max}$ (refer to flow table in Sect. 10.1)

0.0053	–	33 929	m^3/hr
0.00147	–	9 424.5	Liter/Sec
0.00233	–	151 778	US.Gal/min

Change flashing number (cursor) with ↑ *or* ↓ key.
Use → key to shift cursor 1 place to right.
Press ↵ *key to return to Fct. 1.01 FULL SCALE.*

Note if **“VALUE P”** is displayed after pressing ↵ key:
PULSE/VOL. is set under Fct. 1.06 PULS B1, subfunction “SELECT P”. Due to the changed full-scale range $Q_{100\%}$, the output frequency (F) of the pulse output will be over- or undershot:
$\mathbf{P_{min}} = F_{min} / Q_{100\%}$ $\mathbf{P_{max}} = F_{max} / Q_{100\%}$
Change pulse value accordingly, see Sect. 5.7 pulse output P, Fct. 1.06.

5.2 Time constant

Fct. 1.02 TIMECONST.
Press → key.

Choice
- **ALL** (applies to display and all outputs)
- **ONLY I+S** (applies only to display, current and status output)

Select with ↑ *or* ↓ key..
Transfer to number setting with ↵ *key. 1st number (cursor) flashes.*

Set numerical value
- **0.2 - 99.9 Sec** (seconds)

Change flashing number (cursor) with the ↑ *or* ↓ key.
Use → key to shift cursor 1 place to right.
Press ↵ *key to return to Fct. 1.02 TIMECONST.*

Fct. 1.03 L.F.CUTOFF
Press → key.

Choice
- **OFF** (fixed tripping point: ON = 0.1 % / OFF = 0.2 % with 100Hz and 1000Hz, see Fct. 1.06; 1% resp. 2%)
- **PERCENT** (variable tripping points: ON = 1 - 19 % / OFF = 2 - 20 %)

Select with ↑ or ↓ key.
Transfer to number setting using → key (only if "PERCENT" selected).
1st number (cursor) flashes.

Setting the numerical value when "PERCENT" selected
- **01** to **19** (cutoff "on" value, left of hyphen)
- **02** to **20** (cutoff "off" value, right of hyphen)

Change flashing number (cursor) with the ↑ or ↓ key.
Shift cursor 1 place to right using → key.
Press ↵ key to return to Fct. 1.03 L.F.CUTOFF.

Note: The cutoff "off" value must be greater than the cutoff "on" value.

Display 5.4

Fct. 1.04 DISPLAY
Press → key.

→ **DISP. FLOW = select unit for display of flowrate,** *press → key*
- **NO DISP.** (no display)
- **m3/hr** (cubic metres per hour)
- **Liter/Sec** (litres per second)
- **US.Gal/min** (US gallons per minute)
- user-defined unit, factory-set: **"Liter/hr"** (litres per hour) or **"US MGal/day",** see Sect. 5.14
- **PERCENT** (percentage display)
- **BARGRAPH** (numerical value and bar graph display in %)

Select with ↑ or ↓ key.
Press ↵ key to transfer to subfunction "DISP. TOTAL".

→ **DISP. TOTAL = select unit for totalizer display,** *press → key*
- **NO DISP.** (no display)
- **OFF** (internal totalizer switched off)
- **+ TOTAL.** • **– TOTAL.** • **+/– TOTAL.** • **SUM (Σ)** • **ALL (sequential)**

Select with ↑ or ↓ key.
Transfer to totalizer unit setting using ↵ key.

- **m3** (cubic metres)
- **Liter** (litres)
- **US.Gal** (US gallons)
- user-defined unit, factory-set: **"Liter"** or **"US MGal"**, see Sect. 5.14

Select with ↑ or ↓ key.
Transfer to totalizer format setting using → key.

Continuation see next page

Setting of totalizer format

- **Auto** (exponent notation)
- **# . #######**
- **## . ######**
- **### . #####**
- **#### . ####**
- **##### . ###**
- **###### . ##**
- **####### . #**
- **########**

Select with ↑ *or* ↓ key..
Press ↵ key to transfer to subfunction “DISP. MSG”.

→ **DISP. MSG. = additional messages required in measuring mode,** *press → key*

- **NO** (no other messages)
- **YES** (display other messages, e.g. errors, in sequence with the measured values)

Select using the ↑ *or* ↓ key.
Press ↵ *key to return to Fct. 1.04 DISPLAY.*

Note: “BUSY” is displayed in the measuring mode when all displays are set to “NO DISP.” or “NO”. Sequencing of displays is automatic. However, in the measuring mode, manual sequencing can be carried out with the ↑ key. Return to automatic sequencing after approx. 3 minutes.

Please refer to Sect. 3.2 “factory settings”

5.5 Internal electronic totalizer

The internal electronic totalizer counts in m³, regardless of the unit set under Fct. 1.04, subfunction “DISP. FLOW”.
The counting range is dependent upon the meter size and has been selected such that the totalizer will count for a minimum of 1 year without overflow:

Meter size		**Counting range**	
DN mm	inch	in m³	US Gal equivalent
2.5 - 50	$^1/_{10}$ - 2	0 - 999 999.99999999	0 - 264 172 052.35800
65 - 200	$2^1/_2$ - 8	0 - 9 999 999.9999999	0 - 2 641 720 523.5800
250 - 600	10 - 24	0 - 99 999 999.999999	0 - 26 417 205 235.800
700 -1000	28 - 40	0 - 999 999 999.99999	0 - 264 172 052 358.00

Only part of the totalizer count is shown in the display because it is not possible to output a 14-digit number. Unit and format of the display are freely selectable, see Fct. 1.04, subfunction “DISP. TOTAL” and Sect. 5.4. This determines which part of the count is to be displayed. Display overflow and totalizer overflow are independent of one another.

Example

Internal count	0000123 . 7654321	m³
Format, display unit	XXXX . XXXX	Liter
Internal count in unit	0123765 . 4321000	Liter
Displayed	3765 . 4321	Liter

Fct. 1.05 CURRENT I
Press → key.

→ FUNCT. I = Select function for current output, *press → key*
- **OFF** (switched off, no function)
- **1 DIR.** (1 flow direction)
- **2 DIR.** (2 flow directions, F/R mode, forward/reverse)

Select using ↑ or ↓ key.
Transfer to subfunction "RANGE I" with ↵ key.
Exceptions: *When "OFF" selected, return to Fct. 1.05 CURRENT I.*

→ RANGE I = select measuring range, *press → key*
- **0 - 20 mA** } fixed ranges
- **4 - 20 mA**
- **mA** (user-defined value) (value $I_{0\%} < I_{100\%}$!)

$I_{0\%}$ – $I_{100\%}$	
0-16 mA	4-20 mA

Press → key to transfer to number setting.
Select with ↑ or ↓ key.
Press key ↵ to transfer to subfunction "I ERROR".

→ I ERROR = set error value, *press → key*
- **22 mA** (fixed value)
- **0.0 - $I_{0\%}$ mA** (variable value; only variable when $I_{0\%} \geq 1$ mA, see "RANGE I" above)

Select using ↑ or ↓ key.. *Press → key to transfer to number setting.*
Press key ↵ to return to Fct. 1.05 CURRENT I.

Please refer to Sect. 3.2 "Factory settings".

Refer to Sect. 2.3 for connection diagrams, and to Sect. 5.14 for characteristics.

5.7 Pulse output P

Fct. 1.06 PULS.OUTP. P
Press key → .

→ **FUNCT. P = select function for pulse output,** *press → key*
- **OFF** (switched off, no function)
- **1 DIR.** (1 flow direction)
- **2 DIR.** (2 flow directions, F/R mode, forward/reverse)

Select with key ↑ or ↓.
Press ↵ key to transfer to subfunction "SELECT P".
Exception: *When "OFF" selected, return to Fct. 1.06 PULS P.*

→ **SELECT P = select pulse type,** *press → key*
- **100 Hz**
- **1000 Hz**
- **PULSE/VOL.** (pulses per unit volume, flow)
- **PULSE/ZEIT** (pulses per unit time for 100% flow)

Select using ↑ or ↓ key.
Transfer to subfunction "PULSWIDTH" with ↵ key.
Note: *when 100 Hz or 1000 Hz selected, return to Fct. 1.06 PULS.OUTP. P.*

→ **PULSWIDTH = set pulse width,** *press → key*
- **50 mSec** F_{max} = 10 Hz F_{min} = 0.0056 Hz (= 20 Pulse / hr)
- **100 mSec** = 5 Hz
- **200 mSec** = 2.5 Hz
- **500 mSec** = 1 Hz
- **1 Sec** = 0,5 Hz

Select using ↑ or ↓ key.
Transfer to subfunction "VALUE P" with ↵ key or return to Fct. 1.06 PULS.OUT. P, depending on choice of pulse type in subfunction "SELECT P".

→ **VALUE P = set pulse value per unit volume**
(appears only when "PULSE/VOL." set under "SELECT P", press → *key.*

- **XXXX PulS/m3**
- **XXXX PulS/Liter**
- **XXXX PulS/US.Gal**
- **XXXX PulS/** user unit, factory-set: **"Liter"** or **"US MGal",** see Sect. 5.12.

Select using ↑ or ↓ key.
Transfer to number setting with → key. 1st digit (cursor) flashes.

Set numerical value

- **XXXX** (setting range depends on pulse width and full-scale range: $\mathbf{P_{min}} = F_{min} / Q_{100\%}$ $\mathbf{P_{max}} = F_{max} / Q_{100\%}$)

Change flashing digit (cursor) with ↑ or ↓ key,
shift cursor 1 place to right with → key.
Press ↵ key to return to Fct. 1.06 PULS. P.

or

→ **VALUE P = set pulse value per unit time,**
(appears only when "PULSE/TIME" has been set under "SELECT P"), *press → key.*

- **XXXX PulSe/Sec**
- **XXXX PulSe/min**
- **XXXX PulSe/hr**
- **XXXX PulSe/** user unit, factory-set: **"hr"**, see Sect. 5.12.

Select using ↑ or ↓ key.
Transfer to number setting with → key, 1st digit (cursor) flashes.

Set numerical value

- **XXXX** (setting range depends on pulse width)

Change flashing digit (cursor) with ↑ or ↓ key,
shift cursor 1 place to right with → key.
Press ↵ key to return to Fct. 1.06 PULS. P.

Please refer to Sect. 3.2 "factory settings"

Refer to Sect. 2.4 for connection diagrams, and to Sect. 5.14 for characteristics.

5.8 Status output S

Fct. 1.07 STATUS S
Press key → .

Select function of status outputs, *press → key*

- **ALL ERROR** (indicates all errors)
- **FATAL.ERROR** (indicates fatal errors only)
- **OFF** (switched off, no function)
- **ON** (indicates that flowmeter is operative)
- **F/R INDIC.** (indicates direction for current and pulse outputs, F/R mode)
- **TRIP. POINT** (setting range: 002 – 115 PERCENT of $Q_{100\%}$, full-scale range)
  Transfer to number setting with ↵ key, 1st digit (cursor) flashes. Change flashing digit (cursor) with ↑ and ↓ keys. Use → and ← keys to shift cursor 1 place to right or left.

Press ↵ key to return to Fct. 1.07 STATUS S.

• **Characteristic of status output**	**Switch open**	**Switch closed**
OFF (switched off)	no function	
ON (e.g. operation indicator)	power OFF	power ON
F/R INDIC.	**F**orward flow	**R**everse flow
TRIP POINT (limit switch)	inactive	active
ALL ERROR (all errors)	errors	no error
FATAL.ERROR (fatal errors only)	errors	no error

Please refer to Sect. 3.2 “factory settings”

Refer to Sect. 2.4 for connection diagrams, and to Sect. 5.14 for characteristics.

Language 5.9

Fct. 3.01 LANGUAGE
Press → key.

Select language for texts in display
- **D** (German)
- **GB/USA** (English)
- **F** (French)
- others on request

Select using ↑ or ↓ key.
Press ↵ key to return to Fct. 3.01 LANGUAGE.

Entry code 5.10

Fct. 3.04 ENTRY CODE
Press → key.

Choice
- **NO** (no code, enter setting mode with → key)
- **YES** (enter setting mode with → key and Code 1: → → → ↵↵↵ ↑↑↑)

Select using ↑ or ↓ key.
Press ↵ key to return to Fct. 3.04 ENTRY CODE.

5.11 Primary head

Fct. 3.02 FLOW METER
Press → key.

→ **DIAMETER = set meter size** (see instrument nameplate) *press → key*
Select size from table of meter sizes:
- **DN 2.5 - 1000 mm** equivalent to **1/10 - 40 inch**

Select using ↑ or ↓ key.
Transfer to subfunction "FULL SCALE" with ↵ key.

→ **FULL SCALE = set full-scale range,** *press → key.*
Set as described in Sect. 5.1.

Transfer to subfunction "GK VALUE" with ↵ key.

Note: if **"VALUE P"** is displayed after pressing ↵ key.
PULSE/VOL. is set under Fct. 1.06 PULS.OUTP. P, subfunction "SELECT P". Because the full-scale range $Q_{100\%}$ has been changed, the output frequency (F) of the pulse output is over- or undershot: $\mathbf{P_{min}} = F_{min} / Q_{100\%}$ $\mathbf{P_{max}} = F_{max} / Q_{100\%}$
Change pulse value accordingly, see Sect. 5.7 pulse output P, Fct. 1.06.

→ **GK VALUE = set primary constant GK,** *press → key.*
- **1.0000 - 9.9999** (note information on instrument nameplate, do **not** change setting !)

Change flashing digit (cursor) with ↑ or ↓ key.
Shift cursor 1 place to right or left with → or ← key.
Transfer to subfunction "FIELD FREQ." with ↵ key.

→ **FIELD FREQ. = set magnetic field frequency,** *press → key*
- **1/2** • **1/18** } (1/2, 1/6 1/18 or 1/36 of power frequency,
- **1/6** • **1/36** } see instrument nameplate, do **not** change setting)

Select using ↑ or ↓ key.
Transfer to subfunction "FLOW DIR." with ↵ key.
(only for units with DC power supply, transfer to subfunction "LINE FREQ").

→ **LINE FREQ. = normal line frequency in your country,** *press → key.*
(Please note, applicable for flowmeters equipped with DC in power supply!)
- **50 Hz** *Select using the ↑ or ↓ key.*
- **60 Hz** *Transfer to subfunction "FLOW DIR." with ↵ key.*

→ **FLOW DIR. = set flow direction,** *press → key.*
- **+ DIR.** (for identification of flow direction, see "+" arrow on primary head;
- **- DIR.** for F/R mode, identifies the "positive" flow direction)

Select using the ↑ or ↓ key.
Press ↵ key to return to Fct. 3.02 FLOW METER.

Zero check, see Fct. 3.03 and Sect. 7.1.

Please refer to Sect. 3.2 "factory settings"

Fct. 3.05 USER UNIT
Press → key.

→ TEXT VOL = set text for user-defined unit, *press → key*
- **Liter** (max. 5 characters, factory-set: "Liter" or "US MGal")
  Characters assignable to each place: **A-Z, a-z, 0-9,** or "–" (= blank character)

Change flashing place (cursor) using ↑ or ↓ key.
Use → or ← key to shift cursor 1 place to right or left.
Transfer to subfunction "FACT. VOL." with ↵ key.

→ FACT. VOL. = set factor F_M for volume, *press → key*
- **1.00000 E+3** (factory-set: "1000 or 2.64172 x 10^{-4}" / factor F_M = volume per 1 m^3)
  Setting range: 1.00000 E-9 to 9.99999 E+9 (= 10^{-9} to 10^{+9})

Change flashing place (cursor) using ↑ or ↓ key..
Use → or ← key to shift cursor 1 place to right or left.
Transfer to subfunction "TEXT TIME" with ↵ key.

→ TEXT TIME = set text for required time, *press → key*
- **hr** (max. 3 places, factory-set: "hr = hour")
  Characters assignable to each place: **A-Z, a-z, 0-9,** or "–" (= blank character)

Change flashing place (cursor) using ↑ or ↓ key.
Use → or ← key to shift cursor 1 place to right or left.
Transfer to subfunction "FACT. TIME" with ↵ key.

→ FACT. TIME = set factor F_T for time, *press → key*
- **3.60000 E+3** (factory-set: "3600" for hour or "8.64 x 10^4" for day / set factor F_T in seconds)
  Setting range: 1.00000 E-9 to 9.99999 E+9 (= 10^{-9} to 10^{+9})

Change flashing place (cursor) using ↑ or ↓ key.
Use → or ← key to shift cursor 1 place to right or left.
Press ↵ key to return to Fct. 3.05 USER UNIT.

Factors for volume F_M (factor F_M = volume per 1 m^3)

Volumetric unit	Text examples	Factor F_M	Setting
Cubic metres	**m3**	1.0	**1.00000 E+0**
Litres	**Liter**	1 000	**1.00000 E+3**
Hectolitres	**h Lit**	10	**1.00000 E+1**
Decilitres	**d Lit**	10 000	**1.00000 E+4**
Centilitres	**c Lit**	100 000	**1.00000 E+5**
Millilitres	**m Lit**	1 000 000	**1.00000 E+6**
US gallons	**USGal**	264.172	**2.64172 E+2**
Millions US gallons	**USMG**	0.000264172	**2.64172 E -4**
Imperial gallons	**GBGal**	219.969	**2.19969 E+2**
Mega imperial gallons	**GBMG**	0.000219969	**2.19969 E -4**
Cubic feet	**Feet3**	35.3146	**3.53146 E+1**
Cubic inches	**inch3**	61 024.0	**6.10240 E+4**
US barrels liquid	**US BaL**	6.28982	**6.28982 E+0**
US barrels ounces	**US BaO**	33 813.5	**3.38135 E+4**

Factors for time F_T (factor F_T in seconds)

Time unit	Text examples	Factor F_T (seconds)	Setting
Seconds	**Sec**	1	**1.00000 E+0**
Minutes	**min**	60	**6.00000 E+1**
Hours	**hr**	3 600	**3.60000 E+3**
Day	**DAY**	86 400	**8.64000 E+4**
Year (= 365 days)	**YR**	31 536 000	**3.15360 E+7**

5.13 F/R mode, forward/reverse flow measurement

- **Refer to Sect. 2.4 for electrical connection of outputs.**
- **Define direction of forward (normal) flow,** see Fct. 3.02, subfunction “FLOW DIR.”:
  in conjunction with F/R operation, set the direction for the forward flow here.
  “+” signifies the same direction as shown by the arrow on the primary head,
  “–” signifies the opposite direction.
- Set the **status output** to ”F/R INDIC.”, see Fct. 1.07.
- **Current and/or pulse output** must be set to “2 DIR.”, see Fct. 1.05 and 1.06, subfunctions “FUNCT. I” and “FUNCT. P”.

5.14 Characteristic of outputs

I Current output
$I_{0\%}$ 0 or 4 mA
$I_{100\%}$ 20 mA

P Pulse output
$P_{100\%}$ Pulses at $Q_{100\%}$, full-scale range

Q_F 1 flow direction, forward flow in F/R operation
Q_R Reverse flow in F/R operation
$Q_{100\%}$ Full-scale range

S Status output

switch open
switch closed

1 flow direction

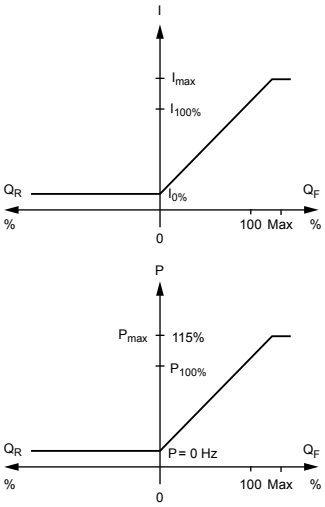

2 flow directions, F/R mode

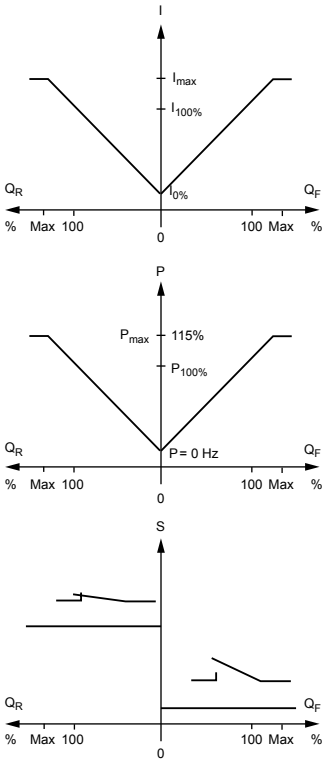

Applications 5.15

Fct. 3.06 APPLICAT.
Press key → .

→ **FLOW = Set characterization for the flow,** press key

- **STEADY** (flow is steady)
- **PULSATING** (pulsating flow, e.g. due to reciprocating pumps, see also Sect. 6.4, 6.5 and 6.6 "Special-case applications")

} *select function using key ↑ or ↓*

Press ↵ key to return to Fct. 3.06 APPLICAT.

Measuring point identification 5.16

Fct. 3.07 MEAS.PNT.
Press key → .

Set measuring point identification using max. 10 characters , *(e.g. TQ1_532197)*
You can use any out of A...Z / a...z / 0...9 or _ (underscore)
- Select character by pressing key ↑ *or* ↓.
- Use key → to shift one place to the left, back with ← key.

Press key ↵ to return to Fct. 3.07 MEAS.PNT.

Communication interface 5.17

Fct. 3.08 COM
Press key → .

Specify function

- **OFF** (Switched off)
- **HART** (HART Interface)
- **KROHNE** (RS 485 Interface)

} *select function using key ↑ or ↓*

Use key ↑ or ↓ to set ADDRESS 00-15 after selecting "HART" with → key.
Press key ↵ dto return to Fct. 3.08 COM.

Use key ↑ or ↓ to set ADDRESS 000-239 after selecting "KROHNE" (RS 485). Press key → and set up BAUD RATE: • 1200 • 2400 • 4800 • 9600 • 19200. *Use key ↑ or ↓* to select baud rate.
Press key ↵ to return to Fct. 3.08 COM.

Control input E (IFC 020 E only) 5.18

Fct. 1.08 CTRL.INP. E
Press key → .

Select control input function, using key ↑ *or* ↓.

- **OFF** (Switched off, out of function)
- **ZERO OUTPUT** (Set output and display to "Min. values")
- **RESET COUNT.** (Reset counter)
- **RESET ERROR** (Delete / confirm error message)

Press key ↵ to return to Fct. 1.08 CTRL.INP. E

For factory-set preferences refer to the start-up protocol and Section 3.2.

Part C Special applications, functional checks, service, and order numbers

6 Special applications

6.1 HART® interface

The HART interface is a smart interface, in other words a communication signal superimposed on the current output. All functions and parameters can be accessed via this interface.

The following HART features are supported:
- point-to-point connection
- multidrop (up to 15 HART devices)

The burst mode is not normally used. Further information about HART is available from the HART Communication Foundation, of which Krohne is a member.

Electrical connection

HART® - active

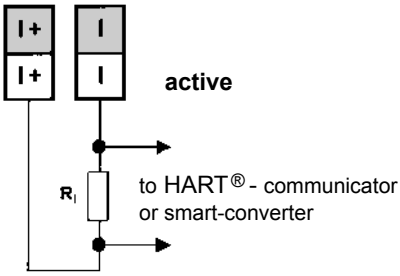

$R_i \geq 250\ \Omega$

HART® - passive

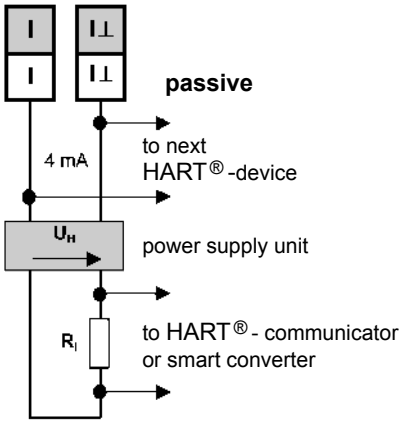

Power supply unit (and section switch amplifier)
must be set up accordingly if in use for HART® operation.

Settings and operation

Fct.	Parameter	Point-to-point mode	Multidrop mode
1.05	**FUNCT. I**	1 CORRECT. **or** 2 CORRECT.	OFF
	RANGE I	4-20 mA **or** $I_{0\%}$ m 4 mA	Any
3.09	**COM**	HART	HART
	ADDRESS	0	01, 02, 03 ..... 15 (use one address at one time only)
Operation Current output		Active or passive	Passive only

For further information on setting the signal converter refer to chapters 4 and 5.

HART operating tools / Device Description (DD)

The IFC 020 can be operated either via its local operator interface or by means of the HART communicator or the CONFIG program. Both operating tools are available from KROHNE. Operator control by means of the HART communicator requires a device description (DD) which we can load for you into the communicator. We can, of course, also load the DDs of all manufacturers who have filed their DDs with the HART Communication Foundation. If you wish to use the IFC 020 in your operating tool, for example, please ask for the description of the HART command used so that you can address the complete IFC 020 functionality via HART.

Krohne RS 485 Interface 6.2

Electrical connection

Address, e.g.:

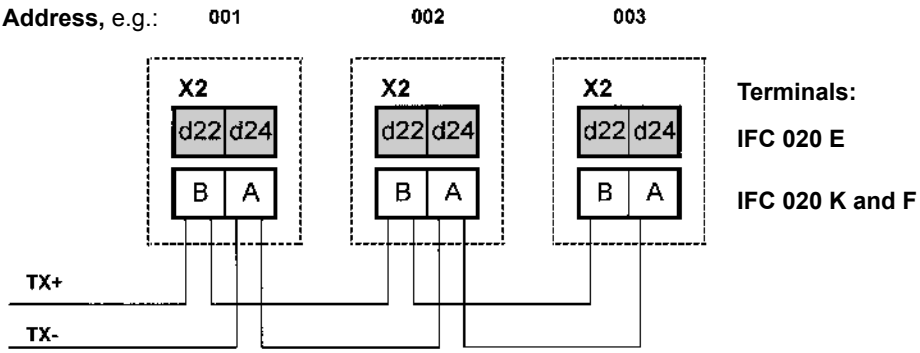

It is essential to blank off the final signal converter's electrical bus. To do this, solder up the semicircular circuits of solder points **S6** and **S7** on the amplifier PCB. For further information refer to sections 8.8 and 8.9.

The RS 485 protocol is available. Please contact your local Krohne supplier / company.

Settings for use in interface operation

Fct.	Parameter	Krohne RS 485 Interface
3.08	COM	KROHNE
	ADRESS	000-239
	BAUD RATE	• 1200 • 2400 • 4800 • 9600 • 19200

For further information on setting the signal converter refer to chapters 4 and 5.

6.3 Stable signal outputs when measuring tube empty

Output signals can be stabilized to values as for “zero” flow to prevent random output signals when the measuring tube is empty or when the electrodes are not wetted in the event the measuring tube is partially full.

- Display: 0
- Current output: 0 or 4 mA, see setting in Fct. 1.05
- Pulse output: no pulses (= 0 Hz), see setting in Fct. 1.06

Precondition:
- electrical conductivity of product: ≥ 200 µS/cm, ≥ 500 µS/cm for meter sizes DN 2.5 - 15 and 1/10” - 1/2”
- Signal cable length ≤ 10m and vibration free with signal converter
- Homogeneous liquid products, free of solids and gasses an do not tend to electrical or catalytic reactions.

IFC 020 K and IFC 020 F

Changes on amplifier PCB, see Fig. in Sect. 8.8.

Switch off power source before opening the housing!

Fig. A, B and D are situated in Section 8.1!

1) Unscrew 4 recessed head screws (Fig. A) and remove transparent cover.

2) Unscrew 4 recessed head screws (Fig. B) and remove black plastic cover.

3) Unscrew 2 recessed head screws (Fig. D) and remove black metal cover.

4) Unscrew 4 recessed head screws and fold display to the side carefully.

5) Join the two “semicircles” of points **S1** and **S3** on the amplifier board with tin solder, see illustration in Sect. 8.8.

6) Reassemble in reverse order, points 4) - 2) above.

7) Switch on power.

8) Check setting of the low-flow cutoff SMU, Fct. 1.03, and reset if necessary:

L.F.CUTOFF switched on, range:

Full scale range $Q_{100\%}$		**Cutoff ..... values**	
		... OFF ...	**... ON ...**
> 3 m/s	> 10 ft/s	> 2 %	1 %
1 - 3 m/s	3 -10 ft/s	> 6 %	4 %
< 1 m/s	< 3 ft/s	>10 %	8 %

Operator control:
See Sect. 4 and 5.3 Fct. 1.03.

9) After checking and/or resetting, replace the transparent cover and tighten the 4 recessed head screws.

Changes on amplifier PCB, see Fig. in Sect. 8.9.

Switch off power source before opening the housing!

Illustrations 1 till 3 are situated in Section 8.1

1) Unscrew the 4 recessed head screws (S1) on the front side **(Fig. 1)**.

2) Carefully remove the plug-in unit from the subassembly support.

3) Unscrew the 4 recessed head screws (S2) on the front side **(Fig. 1).**

4) Remove the ribbon cable from the display unit. For this, first pull up the securing clamp on the socket **(Fig. 3)**.
Note down situation of contact side of the foil plug.

5) Unscrew the 4 recessed head screws on the back side **(Fig. 2)**
and carefully pull the back cover
together with the electronic unit out of the plug-in unit.

6) Join the “semicircles” of points S2,S3 and S4 on the amplifier board with tin solder, see illustration in Sect. 8.9.

7) Reassemble in reverse order, points 5) - 1) above.

8) Switch on power.

9) Check setting of the low-flow cutoff SMU, Fct. 1.03, and reset if necessary:

L.F.CUTOFF switched on, range:

Full scale range $Q_{100\%}$		**Cutoff ..... values**	
		... OFF ...	**... ON ...**
> 3 m/s	> 10 ft/s	> 2 %	1 %
1 - 3 m/s	3 -10 ft/s	> 6 %	4 %
< 1 m/s	< 3 ft/s	>10 %	8 %

6.4 Pulsating flow

Application
downstream of positive-displacement pumps (reciprocating or diaphragm pumps) without pulsation dampener

Operator control of the signal converter for the new settings, see Sect. 4 and 5

To change settings

- Fct. 3.02 FIELD FREQ. (change magnetic field frequency)
  - Stroke frequency **less than 80 strokes/min** (at max. pump lift): do **not** change setting.
  - Stroke frequency **80 - 200 strokes/min** (at max. pump lift): change setting to **1/2,** only practical with IFM 5020 K and IFS 5000 F (DN 2.5-100 / 1/10”-4”) and IFM 4020 K and F IFS 4000 F (DN 10, 15, 50-100 / 1/10”, 1/2”, 2”-4”), Please consult factory where other types and meter sizes are concerned.
  - Please note: given stroke frequencies close to the tripping point of 80 strokes/min, additional measuring errors of approx. ± 0.5% of the measured value may occasionally occur.

- Fct. 3.06 APPLICAT. (adjust overload point of the A/D converter to the application)
  Change setting to “PULSATING”.

- Fct. 1.04 DISP. FLOW (change display presentation of flow)
  Change setting to “BARGRAPH” to allow better assessment of display unsteadiness.

- Fct. 1.02 TIMECONST. (change time constant)
  - Set to “ALL” and time (**t**) in seconds.
  - Recommended: $t\,[s] = \dfrac{1000}{\text{min. strokes / min}}$
  - Example: min. number of strokes in operation = 50 strokes/minute

    $t\,[s] = \dfrac{1000}{50\ /\ \text{min}} = 20\ s$

    With this setting, the residual ripple of the display will amount to approx. ± 2% of the measured value. Doubling the time constant will reduce the residual ripple by a factor of 2.

6.5 Rapid changes in flowrate

Application
in conjunction with batching processes, fast-response control loops, etc.

Operator control of the signal converter for the new settings
refer to chapters 4 and 5

To change settings

- Fct. 1.02 TIMECONST. (change time constant)
  Setting to “ONLY I” and set time to 0.2 s.

- Dynamic response with meter sizes DN 2.5-300 / 1/10”-12”
  Dead time: approx. 0.06 s at 50 Hz line frequency
  approx. 0.05 s at 60 Hz line frequency
  Time constant: set as above, current output (mA) additionally plus 0.1 s

- Reducing the dead time by a factor of 3 (possible by changing the magnetic field frequency)
  Fct. 3.02 FLOW METER, subfunction “FIELD FREQ.”, change to “1/2”, only practical with IFM 5020 K and IFS 5000 F (DN 2.5-100 / 1/10”-4”) and IFM 4020 K and IFS 4000 F (DN 10, 15, 50-100 / 1/10”, 1/2”, 2”-4”) Please consult factory where other types and meter sizes are concerned.

Unsteady display and outputs can occur in connection with
– high solids contents,
– non-homogeneity,
– poor blending, or
– chemical reactions still in progress in the process liquid.

If, in addition, flow is also pulsating due to the use of diaphragm or reciprocating pumps, refer to Sect. 6.4.

Operator control of the signal converter for the new settings, see Sect. 4 and 5

To change settings

- Fct. 1.04 DISP. FLOW (change display presentation of the flow)
  Change setting to “BARGRAPH” to allow better assessment of display unsteadiness.

- Fct. 1.02 TIMECONST. (change time constant)
  – Setting to “ONLY I”, to “ALL” if pulse output too unsteady.
  – Set time constant to approx. “20 s”, observe unsteadiness of display and adjust time constant if necessary.

- Fct. 3.06 APPLICAT. (adjust overload point of the A/D converter to the application)
  Set to “PULSATING” on trial basis, if unsuccessful return to “STEADY”.

- Fct. 3.02 FIELD FREQ. (change magnetic field frequency)
  On trial basis, change setting to “1/2”; if unsuccessful return to previous setting, usually “1/6”.

  Only practical with IFM 5020 K and IFS 5000 F (DN 2.5-100 / 1/10”-4”)
  and IFM 4020 K and IFS 4000 F (DN 10, 15, 50-100 / 1/10”, 1/2”, 2”-4”),
  Consult factory where other types and meter sizes are concerned.

7. Functional checks

7.1 Zero check Fct. 3.03

Switch off power supply before opening the housing

- Set **"zero" flow** in the pipeline, but make sure that the **measuring tube** is **completely filled** with fluid.
- Switch on the system and wait 15 minutes.
- Press the following keys for zero measurement:

Key	Display		Description
→			If "YES" set under Fct. 3.04 ENTRY CODE, key in 9-keystroke CODE 1 now: → → → ↵ ↵ ↵ ↑ ↑ ↑
	Fct. 1.00	OPERATION	
2x ↑	Fct. 3.00	INSTALL.	
→	Fct. 3.01	LANGUAGE	
2x ↑	Fct. 3.03	ZERO SET	
→		CALIB. NO	
↑		CALIB. YES	
↵	0.00	- - - - - / - - -	Flowrate displayed in set unit, see Fct. 1.04 DISPLAY, subfunction "DISP. FLOW". Zero measurement in progress, duration approx. 15 - 90 seconds. When flow "> 0" "WARNING" notice appears, confirm with ↵ key.
		STORE NO	If new value not to be stored, press ↵ key (3x) 4x = return to measuring mode.
↑		STORE YES	
↵	Fct. 3.03	ZERO SET	Store new zero value.
(2x) 3x ↵	- - - - - - -	- - - - - / - - -	Measuring mode with new zero.

7.2 Test of measuring range Q, Fct. 2.01

Switch off power supply before opening the housing !

- For this test a measured value can be simulated in the range of -110 to +110 percent of $Q_{100\%}$ (full-scale range set, see Fct. 1.01 FULL SCALE).
- Switch on the system.
- Press the following keys for this test:

Key	Display		Description
→			If "YES" set under Fct. 3.04 ENTRY CODE, key in 9-keystroke CODE 1 now: → → → ↵ ↵ ↵ ↑ ↑ ↑
	Fct. 1.00	OPERATION	
↑	Fct. 2.00	TEST	
→	Fct. 2.01	TEST Q	
→		SURE NO	
↑		SURE YES	
↵	0	PERCENT	Current, pulse and status indication outputs indicate the corresponding values.
	± 10	PERCENT	
↑	± 50	PERCENT	Select using ↑ or ↓ key
	± 100	PERCENT	
	± 110	PERCENT	
↵	Fct. 2.01	TEST Q	End of test, actual measured values again present at outputs.
(2x) 3x ↵	- - - - - - -	- - - - - / - - -	Measuring mode

Hardware information and error status, Fct. 2.02 7.3

- Before consulting factory about errors or flow measurement problems, please invoke Fct. 2.02 HARDW. INFO (hardware information).
- An 8-character and a 10-character status code are stored under this function in each of 3 “windows”. These 6 status codes allow rapid and simple diagnosis of your compact flowmeter.
- Switch on system.
- Press the following keys for display of the status codes:

Key	Display		Description	
→ ↑ → ↑	 Fct. 1.00 Fct. 2.00 Fct. 2.01 Fct. 2.02	 OPERATION TEST TEST Q HARDW. INFO	If “YES” set under Fct. 3.04 ENTRY CODE, key in the 9-keystroke CODE 1 now: → → → ↵ ↵ ↵ ↑ ↑ ↑	
→	→ MODUL ADC	-.- - - - -.- - - - - - - - - - -	**1st window**	Sample status code **3.25105.02** (8-character code, 1st line) **3A47F01DB1** (10-character code, 2nd line)
↵	→ MODUL IO	-.- - - - -.- - - - - - - - - - -	**2nd window**	
↵	→ MODUL DISP.	-.- - - - -.- - - - - - - - - - -	**3rd window**	
↵	→ MODUL RS.	-.- - - - -.- -	**4rd window**	
PLEASE NOTE DOWN ALL 6 STATUS CODES !				
↵ (2x) 3x ↵	Fct. 2.02 - - - - - - - -	HARDW. INFO - - - - - / - - -	Terminate hardware information Measuring mode	

If you need to return your flowmeter to Krohne, please refer to last but one page of these Instructions !

Faults and symptons during start-up and process flow measurement 7.4

- Most faults and symptoms occuring with the flowmeters can be eliminated with the aid of the following tables.
- For greater clarity, faults and symptoms in the tables are divided into various groups.

Groups:	**D**	Display
	I	Current output
	P	Pulse output
	S	Status indication output
	D / I / P / S	LED display, current output, pulse output, status output and display

Before contacting Krohne Service, please read through the following tables. THANK YOU !

Group D	Display shows . . .	Cause	Remedial action
D 1	LINE INT.	Power failure. Note: no counting during power failure.	Delete error message in RESET/QUIT. menu. Reset totalizer(s) if need be.
D 2	CUR.OUTP. I	Current output overranged.	Check instrument parameters and correct if necessary. Error message deleted automatically after cause has been eliminated.
D 3	PULS.OUTP. P	Pulse output overranged. Note: totalizer deviation possible	Check instrument parameters, correct if necessary, and reset totalizer(s). Error message deleted automatically after cause has been eliminated.
D 4	ADC	Analog/digital converter overranged.	Error message deleted automatically after cause has been eliminated.
D 5	FATAL. ERROR	Fatal Error, all outputs set to “min.” values.	Replace signal converter (see Sect. 8.4) or contact Krohne Service, having first noted down hardware information and error status, see Fct. 2.02.
D 6	TOTALIZER	Counts lost (overflow, data error)	Delete error message in RESET/QUIT. menu.
D 7	„STARTUP“ cyclic flashing	Hardware fault, Watchdog activated.	Replace signal converter (see Sect. 8.4) or contact Krohne Service.
D 8	BUSY	Displays for flow, totalizers and errors disabled.	Change setting in Fct. 1.04.
D 9	Unsteady display	– Process product conductivity too low, particles/air inclusions too large or inhomogeneous – Pulsating flow – Time constant too low or switched off.	Increase time constant, see Fct. 1.02, or switch on.
D 10	No display	Power OFF.	Switch on power
		Check power fuse(s) F1 (F1 and F2 with DC).	Replace if defective (see Sect. 8.2).
Group I	**Fault / Symptom**	**Cause**	**Remedial action**
I 1	Receiver instrument indicates “0”.	Incorrect connection/polarity	Connect properly, see Sect. 2.4.
		Receiver instrument or current output defective.	Check output (see Sect. 7.2) with new milliammeter: Test ok, check connection cables and receiver instrument, replace if necessary. Test faulty, current output defective. Replace signal converter (see Sect. 8.4) or contact Krohne Service
		Current output disabled, see Fct. 1.05	Activate under Fct. 1.05.
		Short-circuit between current output and pulse output.	Check connection and cables, see Sect. 2.4. Voltage between I+ and I⊥ approx. 15 V. Switch off device, eliminate short-circuit, and switch device on again.
I 2	Unsteady display	– Process product conductivity too low, particles/air inclusions too large or inhomogeneous – Pulsating flow – Time constant too low or switched off.	Increase time constant, see Fct. 1.02

Group P	Fault / Symptom	Cause	Remedial action
P 1	Totalizer connected but does not count any pulses	Incorrect connection/polarity	Connect properly, see Sect. 2.4.
		Totalizer or external voltage source defective.	Check output (see Sect. 7.2) with new totalizer: Test ok, check connection cables and previous totalizers and external voltage source, and replace if necessary. Test faulty, pulse output defective, replace signal converter (see Sect. 8.4) or contact Krohne Service.
		Current output is external voltage source, short circuit or current / pulse output defective	Check connection and cables, see Sect. 2.4. Voltage between I^+ and I⊥ approx. 15 V. Switch off device, eliminate short circuit, switch device on again. If no function, then current or pulse output defective. Replace signal converter (see Sect. 8.4) or contact Krohne Service.
		Pulse output is deactivated, see Fct. 1.06.	Switch on under Fct. 1.06.
P 2	Unsteady pulse rate	– Process product conductivity too low, particles/air inclusions too large or inhomogeneous – Pulsating flow – Time constant too low or switched off	Increase or switch on time constant, under Fct. 1.02 orswitch on if necessary.
P 3	Pulse rate too high or too low.	Incorrect setting for pulse output.	Change setting under Fct. 1.06.
Group S	**Fault / Symptom**	**Cause**	**Remedial action**
S 1	No function	Incorrect connection/polarity of status display	Connect properly, see Sect. 2.4.
		Status display or output defective or external voltage source not supplying voltage.	Set status output under Fct. 1.07 to “F/R INDIC.“ (flow direction) and check (see Sect. 7.2) with new status display: Test ok, check previous status display and external voltage source, and replace if necessary. Test faulty, status output defective, replace signal converter (see Sect. 8.4) or contact Krohne Service.
Group D/I/P/S	**Fault / Symptom**	**Cause**	**Remedial action**
D / I / P / S 1	Unsteady display and outputs	– Process product conductivity too low, particles/air inclusions too large or inhomogeneous – Pulsating flow – Time constant too low	Increase time constant, under Fct. 1.02
D / I / P / S 2	No display and no function of outputs	Power OFF	Switch power on.
		Check power fuse(s) F1 (F1 and F2 for DC).	Replace if defective, see Sect. 8.2.

7.5 Test of signal converter using GS 8 A simulator (option)

7.5.1 IFC 020 K und IFC 020 F signal converter

GS 8 A operating elements and accessories

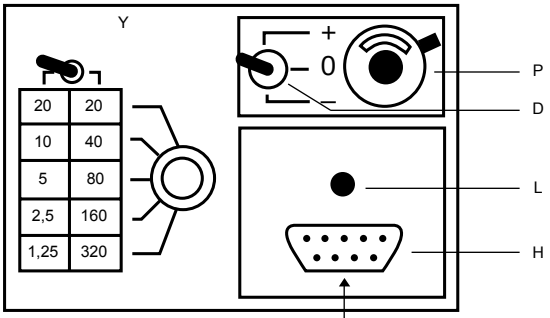

B	Plug for field power supply, 2-pin
C5	Plug for signal cable, 5-pin
D	Switch, flow direction
H	Socket for **H2** plug on cable **Z**
H2	Plug of cable **Z**
L	Power supply ON
P	Potentiometer “zero”
X3	Socket for plug **B** on amplifier PCB
X5	Socket for plug **C3** on amplifier PCB
Y	Switch, measuring ranges
Z	Cable between GS 8 A and signal converters IFC 020K and IFC 020 F

Electrical connection

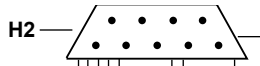

Z

Using GS 8 simulator
Additional adapter is required
between GS 8 and IFC 020 K and IFC 020 F signal converter.
Order No. 2.10764.00.

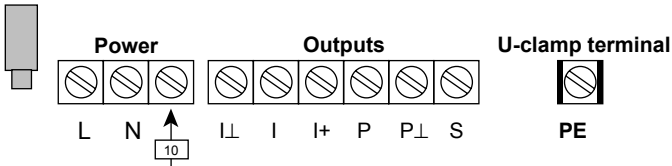

Ⓐ Milliammeter, accuracy class 0.1, R_i < 500 ohms, range 4-20 mA

Σ Electronic frequency counter, input resistance approx. 1 kΩ, range 0-1 kHz, time base min. 1 second, see connection diagrams in Sect. 2.4.

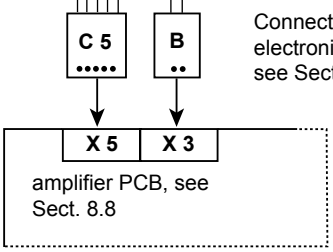

Connection of milliammeter and electronic frequency counter, see Sect. 2.4 “Connection of outputs”.

a) **Switch off power source before opening the housing !**

b) Unscrew the 4 recessed head screws, see **Fig. A** in Sect. 8.1, and remove transparent cover from the signal converter housing.

c) Unscrew recessed head screw, see **Fig. B** in Sect. 8.1, and remove black plastic cover.

d) Pull off blue 9-pin plug from the amplifier PCB, see Sect. 8.9:
socket **X3** field power supply and socket **X5** signal cable.

e) Connect plug **B** to socket **X3** (2-pin) and plug **C** (5-pin) to socket **X5** (5-pin)

GS 8A Operating elements and accessories

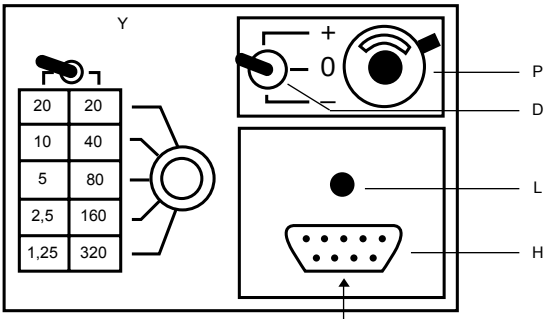

D	Switch, Flow direction
H	Socket for **H1** plug On cable **M**
H1	Plug of cable **M**
L	Power supply **ON**
M	Cable between GS 8A and **IFC 020E** signal converter
P	Potentiometer "zero point"
Y	Switch, Measuring ranges

Electrical connection

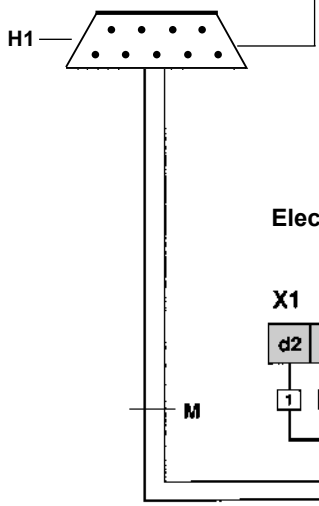

Electrical connection of IFC 020 E and GS 8A

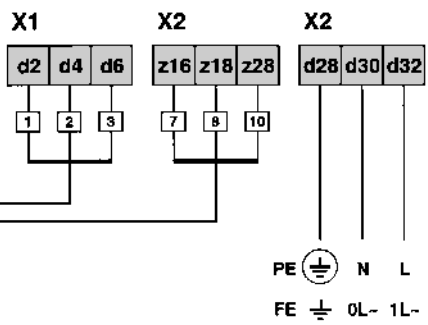

Power supply connection

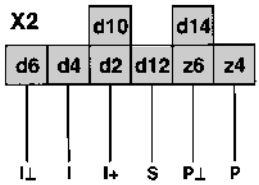

Electrical connection of mA meter and electronic frequency counter (see Sect. 2.4).

a) Switch off power supply before starting work !

b) Unscrew the 4 recessed head screws (S1) on the front plate (see Sect. 8.1, **Fig. 1**).

c) Carefully pull off plug-in unit from subassembly support.

d) The electrical connection is on the X1 and X2 connectors at the rear hand side of the IFC 020 E signal converter as shown in connection diagram with cable M.

Ⓐ mA meter, accuracy class 0.1, Ri < 500 Ω, range 4-20 mA.

Σ Electronic frequency counter, input resistance approx. 1 kΩ, range 0-1 kHz, time basis min. 1 second, see connection diagrams in Sect. 2.4.

7.5.3 Check of setpoint display

1) Switch on power supply, allow at least 15 minutes' warm-up time. .
2) Set switch **D** (front panel of GS 8A) to "0" position.
3) Adjust zero to 0 or 4 mA with the 10-turn potentiometer **P** (front panel of GS 8A), depending on setting in Fct. 1.05, deviation <±10 µA.
4) Calculate position of switch **Y** and displayed setpoints **"I"** and **"f"**:

4.1) $$X = \frac{Q_{100\%} \times K}{GK \times DN^2}$$

$Q_{100\%}$ full-scale range (100%) in volumetric unit **V** per unit time **t**
GK primary constant, see instrument nameplate
DN meter size DN im mm, not inches, see instrument nameplate
t time in seconds **(Sec)**, minutes **(min)** or hours **(hr)**
V volumetric unit
K constant, according to following table

V \ **t**	Sec	min	hr
Liter	25 464	424.4	7.074
m3	25 464 800	424 413	7 074
US gallons	96 396	1 607	26.78

4.2) Determine position of switch **Y**: Use table (front panel GS 8A) to determine value **Y** which comes closest to factor **X** and meets condition **Y** ≤ **X**.

4.3) Calculate setpoint reading **"I"** for current output: $I = I_{0\%} + \frac{Y}{X}(I_{100\%} - I_{0\%})$ in mA

$I_{0\%}$ current (0/4mA) at 0% flowrate
$I_{100\%}$ current (20mA) at 100% flowrate

4.4) Calculate setpoint reading **"f"** for pulse output: $f = \frac{Y}{X} \times P_{100\%}$ in Hz

$P_{100\%}$ pulses per second (Hz) at 100% flowrate

5) Set switch **D** (front panel GS 8A) to position "+" or "-" (**f**orward / **r**everse flow).
6) Set switch **Y** (front panel GS 8A) to the value determined by the method described above.
7) Check setpoint readings **I** and **f,** see points 4.3 and 4.4 above.
8) Deviation <1.5% of setpoint. If greater, replace signal converter, see Sect. 8.4.
9) Test of linearity: set lower Y values, readings will drop in proportion to the calculated Y values.
10) **Switch off power supply** after completing the test.
11) Disconnect the GS 8A.
12) Reassemble in reverse order, see points e) – b) under "electrical connection", see illustration in Sect. 8.1.
13) The system is ready for operation after the power supply has been switched on.

Example: see overleaf

Full-scale range		$\mathbf{Q_{100\%}}$	= 200 m³/hr (Fct. 1.01)
Meter size		**DN**	= 80 mm = 3“ (Fct. 3.02)
Current at	$Q_{0\%}$	$\mathbf{I_{0\%}}$	= 4 mA } (Fct. 1.05)
	$Q_{100\%}$	$\mathbf{I_{100\%}}$	= 20 mA } (Fct. 1.05)
Pulses at	$Q_{100\%}$	$\mathbf{P_{100\%}}$	= 200 pulses/hr (Fct. 1.06)
Primary head constant		**GK**	= 3.571 (see nameplate)
Constant	(**V** in **m3**)		
	(**t** in **hr**)	**K**	= 7074 (see Table)
	(**DN** in **mm**)		

Calculation of **“ X ”** and position of **“ Y ”**

$$X = \frac{Q_{100\%} \times K}{GK \times DN^2} = \frac{200 \times 7074}{3.571 \times 80 \times 80} = 61.905$$

Y = 40, position of switch Y, see front panel GS 8A
(comes closest to X value and is smaller than X).

Calculation of setpoint readings **I** and **f**

$$I = I_{0\%} + \frac{Y}{X}(I_{100\%} - I_{0\%}) = 4\ mA + \frac{40}{61.905}(20mA - 4mA) = 14.3\ mA$$

Deviations are permissible between 14.1 and 14.6 mA (equivalent to ± 1.5 %).

$$f = \frac{Y}{X} \times P_{100\%} = \frac{40}{61.905} \times 200\ pulses / hr = 129.2\ pulses/hr$$

Deviations are permissible between 127.3 and 131.1 pulses/hr (equivalent to ± 1.5 %).

If you need to return your flowmeter to Krohne,
please refer to last but one page of these Instructions !

8 Service

8.1 Illustrations used for service work

IFC 020 K **IFC 020 F**

Switch off power supply before starting service work!

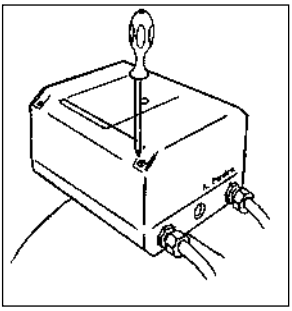

Fig. A

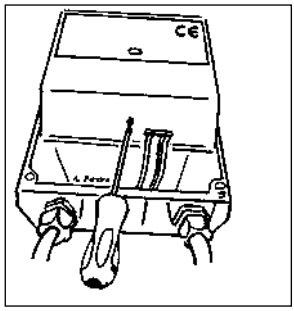

Fig. D

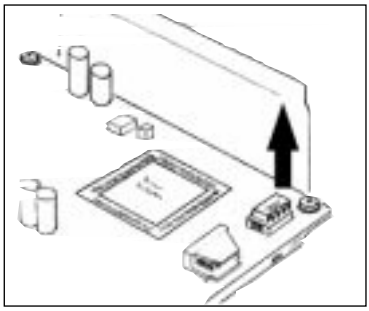

Fig. G

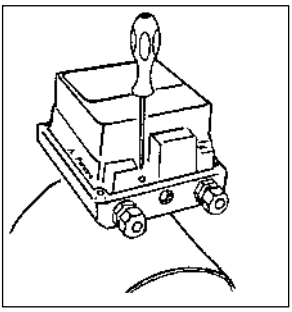

Fig. B

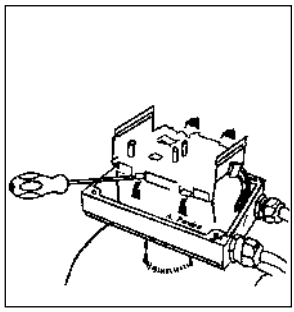

Fig. E

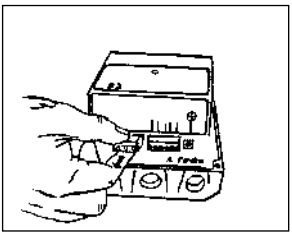

Fig. C

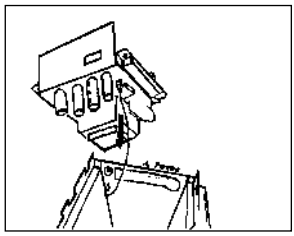

Fig. F

IFC 020 E

Switch off power supply before starting service work!

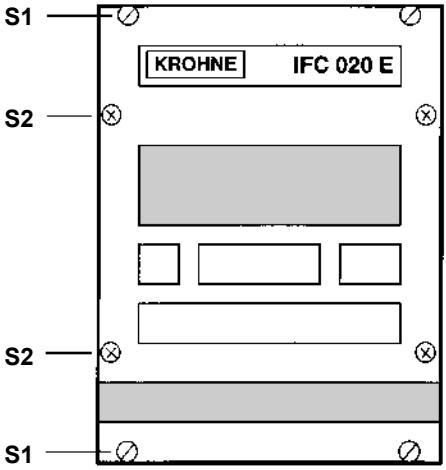

Fig. 1

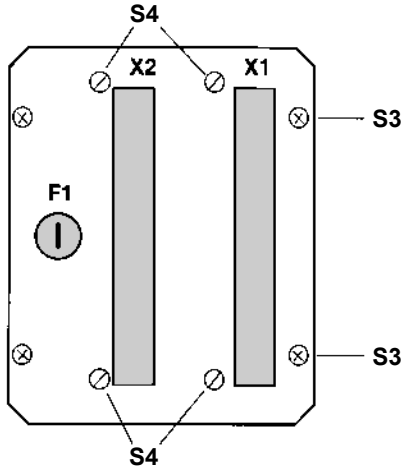

Fig. 2

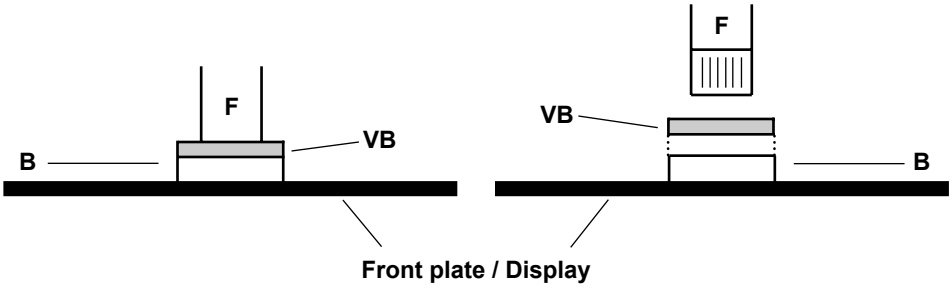

Fig. 3

B	Socket on display PCB
F	Ribbon cable
VB	Locking clip of socket B

8.2 Replacement of power supply fuse

Switch off power supply before opening the housing!

IFC 020 K and IFC 020 F

Refer to Sect. 8.1 for Figs. A and B.

1) Unscrew the 4 recessed head screws **(Fig. A),** and remove transparent cover.

2) Unscrew the recessed head screw **(Fig. B)** and remove the black plastic cover.

3) Take out old and insert new power fuse F1, on the left next to the green connecting terminals.
Please refer to the following table for fuse rating and order number.

4) Reassemble in reverse order, points 2) – 1) above.

IFC 020 E

Refer to Sect. 8.1 for Figs. 1 and 2.

1) Unscrew the 4 recessed head screws **(S1),** on the front (Fig. 1).

2) Carefully remove the plug-in unit from the subassembly support.

3) Replace power fuse F1 back of cassette**(Fig. 2)**. Refer to the following table for fuse rating and order number.

4) Reassemble in reverse order, points 2) - 1) above.

Power PCB	**Power supply**	**Fuse F1**		**IFC 020 K** and **IFC 020 F** for Section 8.3 **Location and position of voltage selector**
		Rating	Order No.	
1. AC version	230/240 V AC	125 mA T	5.06627	
	115/117 V AC	200 mA T	5.05678	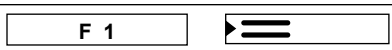
2. AC version	200 V AC	125 mA T	5.06627	
	100 V AC	200 mA T	5.05678	
3. AC version	48 V AC	400 mA T	5.05892	**IFC 020 E only**
	24 V AC	800 mA T	5.08085	
DC version	24.V DC			**IFC 020 E only**

Switch off power source before opening the housing !

IFC 020 K and IFC 020 F

Refer to Sect. 8.1 for Figs. A to F.

1) Unscrew the 4 recessed head screws **(Fig. A),** and remove transparent cover.

2) Unscrew the recessed head screw **(Fig. B)** and remove the black plastic cover.

3) Carefully pull out the green connecting plugs (power supply and outputs) **(Fig. C).**

4) Unscrew the 2 recessed head screws **(Fig. D)** and remove the black metal cover.

5) Carefully pull out the blue 9-pin plug (connection to the primary head) **(Fig. D).**

6) With a screwdriver, carefully remove the 4 metal clips **(Fig. E).**

7) Remove the electronics unit from the housing **(Fig. F)** and detach the ground conductor.

8) Transpose voltage selector on the power supply PCB (illustration in Sect. 8.8) to obtain the required voltage according to the table in Sect. 8.2.

9) Change power fuse F1, see table in Sect. 8.2 for fuse ratings.

10) Reassemble in reverse order, points 7) - 1) above.

IFC 020 E

Refer to Sect. 8.1 for Figs. 1 to 3.

1) Unscrew the 4 screws (S1), on the front **(Fig. 1)**.

2) Carefully remove the plug-in unit from the subassembly support.

3) Unscrew the 4 recessed head screws (S2) on the front **(Fig.1)**.

4) Remove the ribbon cable from the display unit. For that pull up the securing clamp **(Fig. 3)**.
Note down the position of the contact side of the ribbon connector.

5) Unscrew the 4 recessed head screws on the back **(Fig.2)** and carefully pull the electronic unit out of the cassette, together with the back.

6) Transpose the voltage selector on the power PCB (see Fig. in Sect. 8.9) for the desired voltage according to the decal on the transformer.

7) Exchange power fuse F1.
Value see table in Sect. 8.2.

8) Reassemble in reverse order, points 5) - 1) above.

8.4 Replacement of electronics unit of signal converter

Switch off power source before opening the housing !

IFC 020 K and IFC 020 F

Refer to Sect. 8.1 for Figs. A to G.

1) Unscrew the 4 recessed head screws **(Fig. A),** and remove transparent cover.

2) Unscrew the recessed head screw **(Fig. B)** and remove the black plastic cover.

3) Carefully pull out the green connecting plugs (power supply and outputs, **Fig. C**).

4) Unscrew the 2 recessed head screws **(Fig. D)** and remove the black metal cover.

5) Carefully pull off the blue 9-pin plug (connection to the primary head) **(Fig. D).**

6) With a screwdriver, carefully remove the 4 metal clips **(Fig. E).**

7) Remove the electronics unit from the housing **(Fig. F)** and detach the ground conductor.

8) Carefully transpose DATAPROM (IC 13) on the amplifier-PCB (see Fig. in Sect. 8.8) from the “old” and the “new” electronic unit **(Fig. G)**. Watch the position of the IC 13 when putting it on.

9) Check the power supply and fuse F1 on the new electronic unit and transpose / replace if necessary according to Sect. 8.3 nos. 8) and 9).

10) Reassemble in reverse order, points 7) - 1) above.

IFC 020 E

Refer to Sect. 8.1 for Figs. 1 to 3.

1) Unscrew the 4 recessed head screws (S1), on the front **(Fig. 1)**.

2) Carefully remove the plug-in unit from the subassembly support.

3) Unscrew the 4 recessed head screws (S2) on the front **(Fig.1)**.

4) Remove the ribbon cable from the display unit. For that pull up the securing clamp **(Fig. 3)**. Note down the position of the contact side of the ribbun connector.

5) Unscrew the 4 recessed head screws on the back **(Fig.2)** and carefully pull the electronic unit out of the cassette, together with the back.

6) Carefully transpose DATAPROM (IC 13) on the amplifier-PCB (see Fig. in Sect. 8.9) from the “old” and the “new” electronic unit . Watch the position of the IC 13 when putting it on.

7) Check the power supply and fuse F1 on the new electronic unit and transpose / replace if necessary according to Sect. 8.3 nos. 6) and 7).

8) Reassemble in reverse order, points 5) - 1) above.

8.5 IFC 20 K and IFC 020 F: Cleaning the signal converter housing

Switch off power supply before cleaning the housing!

Clean the signal converter housing (made of polycarbonate, PC) with a cotton cloth dipped in solvent-free mild agent only !

Switch off power supply before opening the housing!

For the illustrations A, B and D refer to Section 8.1.

1) Unscrew the 4 recessed head screws **(Fig. A)**, and remove transparent cover from signal converter housing

2) Unscrew recessed head screw **(Fig. B)**, and remove black plastic cover.

3) Unscrew the 2 recessed head screws **(Fig. D)**, and remove black metal cover.

4) Unscrew the 4 recessed head screws of display PCB.

5) Carefully turn display PCB.

6) Fold the ribbon cable as shown in the illustrations found under Section 8.7.
PLEASE NOTE! The ribbon cable must lie flat between display PCB and amplifier PCB and must not exert any pressure on electronic components.

7) Reassemble in reverse order using point 1) to 4) referenced above.

8.7 IFC 020 K and IFC 020 F: Directions for folding the ribbon cable on the display unit

A Socket X7 on amplifier PCB, see Sect. 8.8
B Socket on display PCB
C Contact side
D Display
F Ribbon cable
I Insulated side
K 5 keys for operator control
R Reference point, power terminals
90° Bend cables 90° as shown in drawing

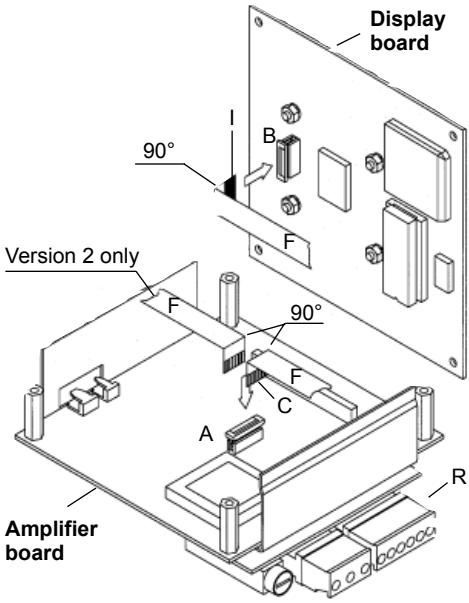

Version 2

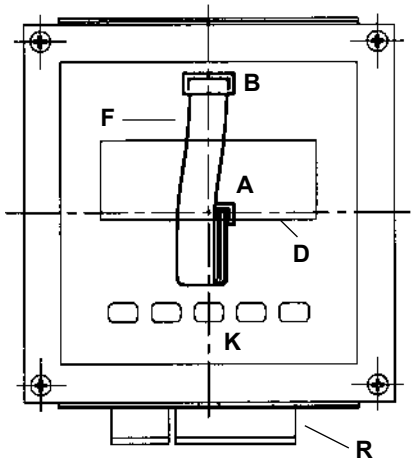

Version 3/ Standard IFC 020 F/D
Separate version

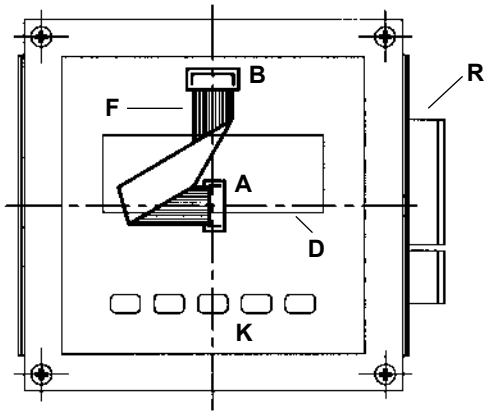

Version 1 / Standard IFC 020 K/D
Compact flowmeter

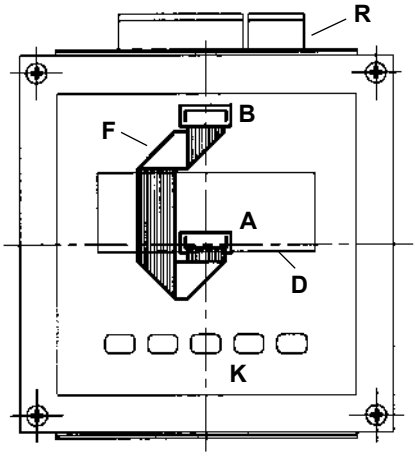

Version 4

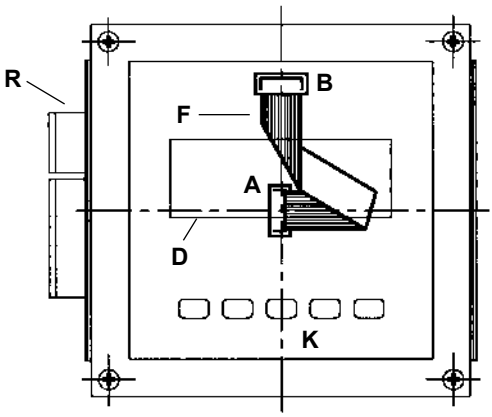

A) Amplifier PCB

IC 13 DATAPROM (sensor), see Sect. 8.4.
S1, S3 for “empty tube” cut-out, see Sect. 6.3.
S2, S4 not used
S6, S7 for blanking off the bus lead, KROHNE RS 485 interface, Sect.6.2.
X3 2-pin plug connector, pin 7 and 8, field power supply, see Sect. 7.5.
X5 5-pin plug connector, pin 1-5, signal cable, see Sect. 7.5.

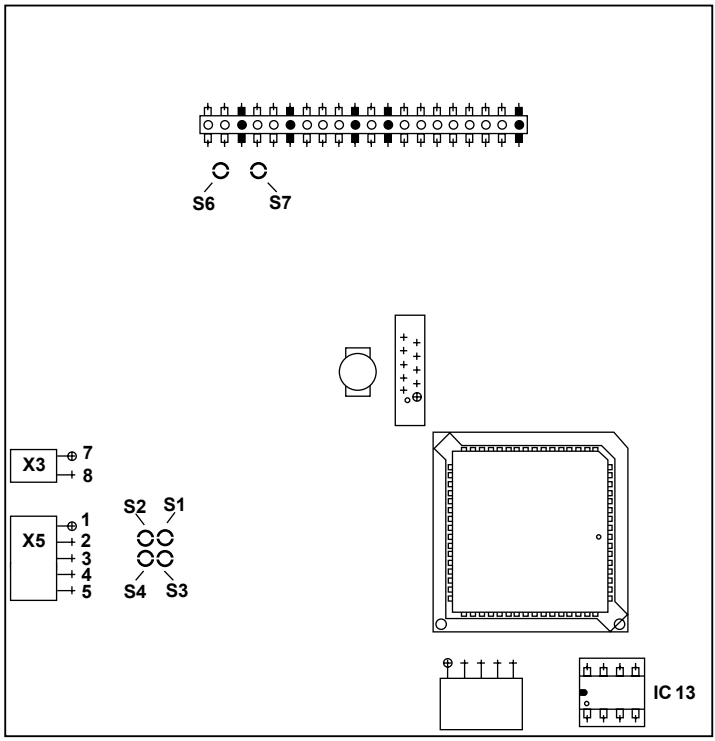

B) Power supply PCB, AC versions

F1 Power fuse. Ratings see Section 8.2 or Chapter 9

SW Voltage selector for changing the voltage see Section 8.3

Tr Transformer

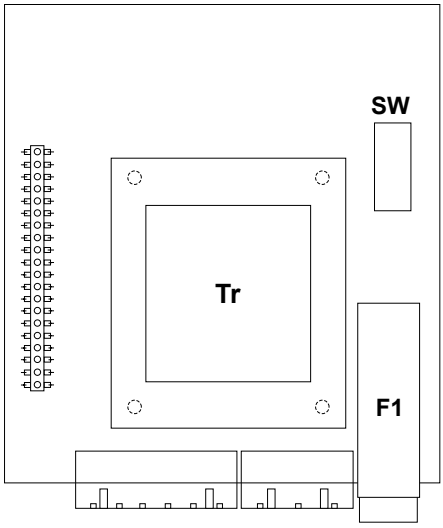

8.9 IFC 020 E: PCB illustrations

A) Amplifier PCB

IC 13 DATAPROM (Sensor)
See Section 8.4

S2, S3 For use of empty tube cut-off
S4 See Section 6.3
S1 Not used
S6, S7 Used to blank off electrical bus of Krohne RS 485 Interface
See Section 6.2

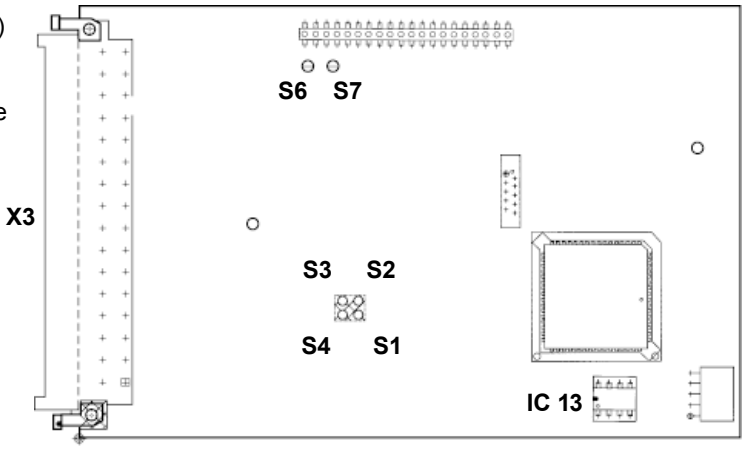

B) Power supply PCB, AC Versions

SW Voltage selector
For changing the voltage see Section 8.3
Tr Transformer

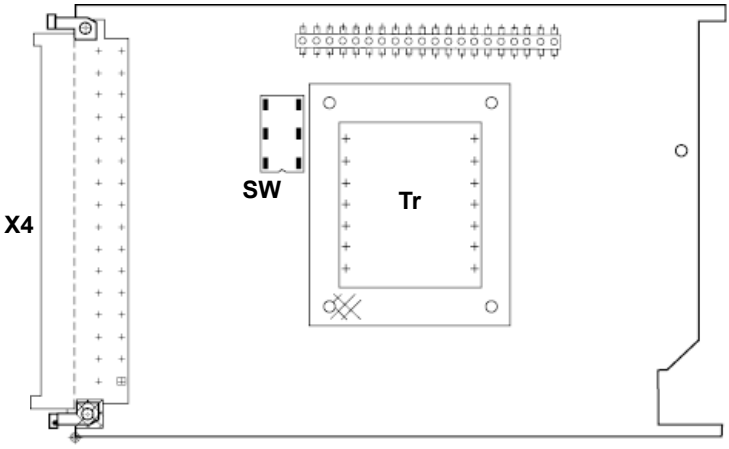

Electronic unit

Power supply unit	Power supply	Order No.	
		IFC 020 K IFC 020 F	IFC 020 E
AC Version 1	230 / 240 V AC	2.10989.01	2.11502.02
	115 / 117 V AC		
AC Version 2	200 V AC		
	100 V AC	2.10989.02	2.11502.01

Power fuse F1

Power supply	Rating	Order No.	Fuse type
200 and 230 / 240 V AC	125 mA T	5.06627	5 x 20 G-fuse switching capacity 1500 A
100 and 115 / 117 V AC	200 mA T	5.05678	
48 V AC	400 mA T	5.05892	
24 V AC	800 mA T	5.08085	
24 V DC	in preperation		

Part D Technical Data, Measuring Principle and Block Diagram

10 Technical data

10.1 Full-scale range $Q_{100\%}$

Full-scale ranges $Q_{100\%}$

Flow rate Q = 100 %	6 liter/h to 33 900 m³/h (0.03 - 156 000 US Gal/min), adjustable as required, equivalent flow velocity 0.3 - 12 m/s (1 - 40 ft/s)
Unit	m³/hr, Liter/Sec, US gallons/min. or user-defined unit, e.g. Liter/day or US MGal/day

Flow tables

v = flow velocity in m/s

Meter size		Full-scale range $Q_{100\%}$ in m³/h		
DN		v = 0.3 m/s	v = 1 m/s	v = 12 m/s
mm	inch	(minimum)		(maximum)
2.5	1/10	0.0053	0.0177	0.2121
4	1/8	0.0136	0.4520	0.5429
6	1/4	0.0306	0.1018	1.222
10	3/8	0.0849	0.2827	3.392
15	1/2	0.1909	0.6362	7.634
20	3/4	0.3393	1.131	13.57
25	1	0.5302	1.767	21.20
32	-	0.8686	2.895	34.74
40	1 1/2	1.358	4.524	54.28
50	2	2.121	7.069	84.82
65	-	3.584	11.95	143.3
80	3	5.429	18.10	217.1
100	4	8.483	28.27	339.2
125	-	13.26	44.18	530.1
150	6	19.09	63.62	763.4
200	8	33.93	113.1	1357
250	10	53.02	176.7	2120
300	12	76.35	254.5	3053
400	16	135.8	452.4	5428
500	20	212.1	706.9	8482
600	24	305.4	1018	12215
700	28	415.6	1385	16625
800	32	542.9	1810	21714
900	36	662.8	2290	26510
1000	40	848.2	2827	33929
1200	48	1221	4072	48858
1400	56	1663	5542	66501
1600	64	2171	7238	86859

v = flow velocity in ft/s

Meter size		$Q_{100\%}$ in US Gal/min	
DN		v = 1 ft/s	v = 40 ft/s
mm	inch	(minimum)	(maximum)
2.5	1/10	0.0245	0.979
4	1/8	0.0383	1.530
6	1/4	0.1530	6.120
10	3/8	0.3735	14.93
15	1/2	0.8405	33.61
20	3/4	1.494	59.75
25	1	2.334	93.34
32	1 1/4	3.824	153.0
40	1 1/2	5.979	239.0
50	2	9.339	373.5
65	2 1/2	15.78	630.9
80	3	23.90	955.6
100	4	37.35	1493
125	5	58.38	2334
150	6	84.05	3361
200	8	149.43	5975
250	10	233.4	9334
300	12	336.2	13442
400	16	597.9	23899
500	20	933.9	37345
600	24	1345	53781
700	28	1919	76760
800	32	2507	100272
900	36	3173	126904
1000	40	3917	156672

Display, digital values, pulse output
F maximum error in % of measured value (**not** typical values)
v Flow velocity in m/s and ft/s

Reference conditions similar to EN 29 104

Product	water at 10 – 30°C/50 – 86°F
Electrical conductivity	> 300 µS/cm
Power supply (rated voltage)	U_N (± 2%)
Ambient temperature	20 – 22°C/68 – 71.6°F
Warm-up time	60 min
Max. calibration equipment error	10x smaller than F
Inlet/outlet runs	10 × DN/2 × DN (DN = meter size)
Primary head	properly grounded and centered

Calibrated on EN 17025 accredited calibration equipment in direct volumetric comparsion.

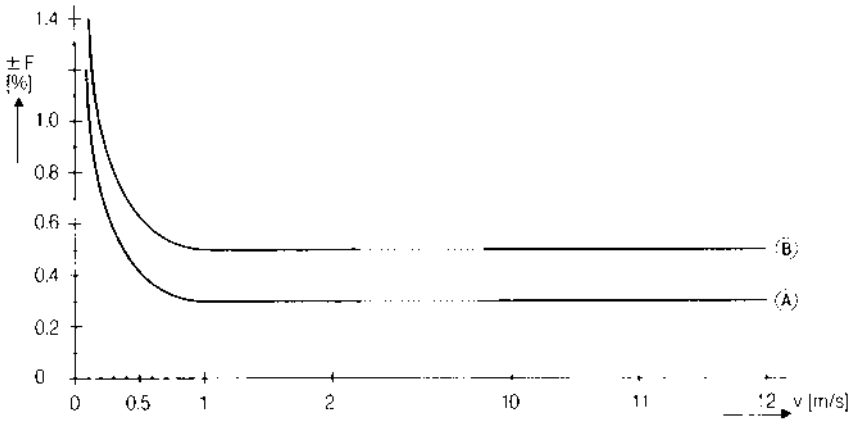

* IFS 6000 F (DN 2.5-4 and 1/10”-1/6”) additional error ±0.3% of MV

Type/Meter size		**Maximum error** in % of **m**easured **v**alue **(MV)** …		**Curve**
DN mm	inch	v ≥ 1 m/s / ≥ 3 ft/s	v < 1 m/s / < 3 ft/s	
DN 2.5 – 6	1/10” – 1/4”	≤ ± 0.5% of MV	≤ ± (0.4% of MV + 1 mm/s) ≤ ± (0.4% of MV + 0.04 inch/s	**B**
≥ DN 10	≥ 3/8”	≤ ± 0.3% of MV	≤ ± (0.2% of MV + 1 mm/s) ≤ ± (0.2% of MV + 0.04 inch/s)	**A**

Current output	same error limits as above, additionally ± 10 µA		
Reproducibility and repeatability	0.1% of MV, minimum 1 mm/s / 0.04 inch/s at constant flow		
External influences	typical values	maximum values	
Ambient temperature			
Pulse output	0.003% of MV **(1)**	0.01 % of MV **(1)**	per 1 K / 1.8°F temperature variation
Current output	0.01 % of MV **(1)**	0.025% of MV **(1)**1	
Power supply	< 0.02 % of MV	0.05 % of MV	at 10% variation
Load	< 0.01 % of MV	0.02 % of MV	at max. permissible load, see pages 6 and 7

(1) All Krohne signal converters undergo burn-in tests, duration minimum 20 hours at varying ambient temperatures – 20 to + 60°C/– 4 to + 140°F. The tests are controlled by computers.

10.3 IFC 020 signal converter

Versions	**with** display / control elements HART® and RS 485 interfaces
IFC 020 K	Compact version,converter directly mounted on the signal converter version
IFC 020 F	Seperate housing fieldversion
IFC 020 E	Seperate housing, 19” Plug-in unit
Current output	
Function	– all operating data settable, galvanically isolated
Current: ranges	0 – 20 mA and 4 – 20 mA
Active mode	max. 500 Ω load
Passive mode	external voltage: 15 ... 20 V DC / 20 ... 32 V DC load: min. ... max. 0 ... 500 Ω / 250 ... 750 Ω
Error identification	0 / 3.6 / 22 mA and variable
Forward/reverse flow measurment	direction identified via status output
Pulse output	
Function	– all operating data settable, galvanically isolated – digital pulse division, interpulse period non-uniform, therefore if frequency and cycle meters connected allow for minimum counting interval: gate time, totalizer $\geq \frac{1000}{P_{100\%}\ [Hz]}$
Pulse rate for Q=100%	10, 100 or 1000 pulses/sec.(=Hz), blocked or to your choice per m^3, Litre US Gallons or freely selectable unit.
Activ mode	connection: electronic totalizers voltage: approx. 15 V DC, from current output load: I_{max} < 23 mA, operation without current output I_{max} < 3 mA, operation with current output
Passive mode	connection: electronic or electromechanical totalizers voltage: external, $U_{ext} \leq$ 32 V DC/≤ 24 V AC load: $I_{max} \leq$ 150 mA
Pulse width	– 50, 100, 200 or 500 msec.,selectable at frequencies < 10Hz – symetric at frequencies < 10Hz
Forward/reverse flow measurement	flow direction identified via status output
Status output (passive)	
Function	settable as indicator for flow direction, errors or trip point
Connection	voltage: external, $U_{ext} \leq$ 32 V DC/≤ 24 V AC load current: $I_{max} \leq$ 150 mA
Control input (passive) IFC 020 E only	
Function	– adjustable for totalizer reset, or reset setting outputs to min. values – initiate function by “low” or “high” control signals
Control signals	U_{max}: 24 V **AC** / 32 V **DC** (any polarity) low: ≤ 1,4 V / ≤ 2 V high: ≥ 3 V / ≥ 4 V
Time constant	0.2 – 99.9 s, adjustable in increments of 0.1 second
Low-flow cutoff	Cutoff “on” value: 1 – 19% Cutoff “off” value: 2 – 20% } of $Q_{100\%}$, adjustable in 1% increments

Local display (D version)		3-field LCD
Display function		actual flowrate, forward, reverse and sum totalizers (7-digit), or 25-character bar graph with percentage indication and status messages
Units:	Actual flowrate	m^3/h, liter/s., US gallons/min or user-defined unit, e. g. liters/day
	Totalizer	m^3, liters, US gallons or user-defined unit, e. g. hecto-liters or US gallons/day (adjustable count duration up to overflow)
Language of plain texts		English, German, French, others on request
Display:	Top field	8-character, 7-segment numeral and sign display, and symbols for key acknowledgement
	Middle field	10-character, 14-segment text display
	Bottom field	6 markers to identify display in measuring mode

Power supply	**1. AC Version** Standard	**2. AC Version** Option (not IFC 020 E)	**DC Version** Option (for IFC 020 E in preparation)
1. Rated voltage Tolerance band	230 / 240 V 200 – 260 V	200 V 170 – 220 V	24 V 18 – 32 V
2. Rated voltage Tolerance band	115 / 120 V 100 – 130 V	100 V 85 – 110 V	– –
Frequency	48 – 63 Hz	48 – 63 Hz	–
Power consumption (incl. primary head)	approx. 8 VA	approx. 8 VA	approx. 8 W

When connected to functional extra-low voltage, galvanic, safety separation (PELV) is essential (to VDE 0100/VDE 0106 and IEC 364/IEC 536 or equivalent national standard).

Housing IFC 020 K / IFC 020 F	
Materials	Polyamid (PA) and die-cast aluminium
Protection category (IEC 529/EN 60 529)	IP 67 equivalent to NEMA 6
Housing IFC 020 E	19” plug-in unit acc. DIN 41494, 21TE wide,3HE high
Materials	aluminium profile, galvanised sheet metal
Protection category (IEC 529/EN 60 529)	IP 20

IFC 020 F
weight approx. 3.8 kg / 8.4 lb

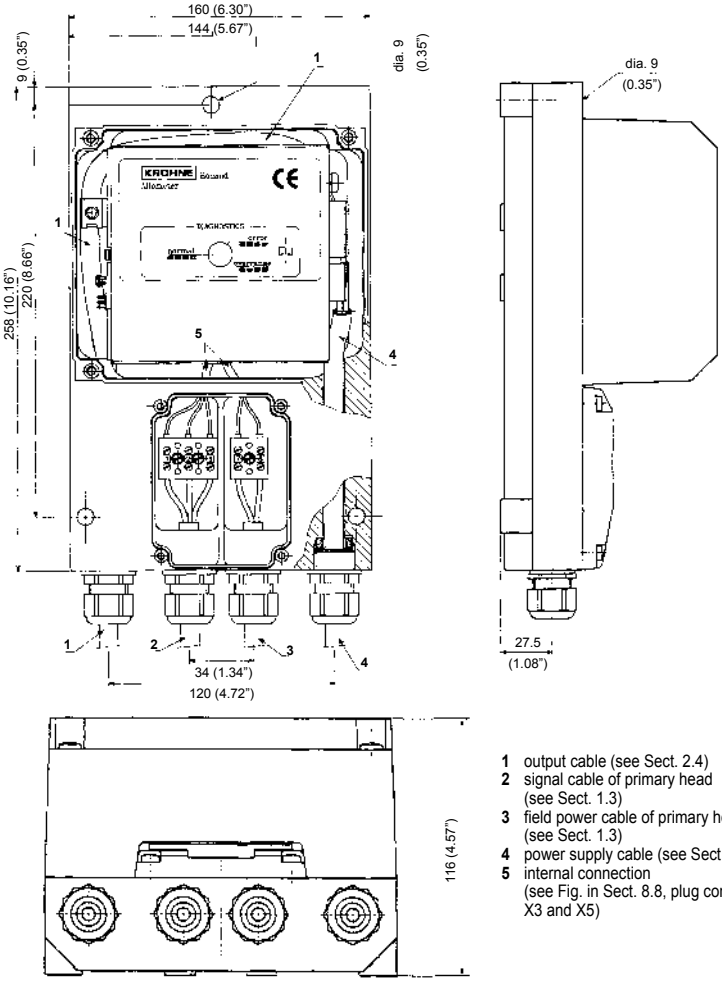

1 output cable (see Sect. 2.4)
2 signal cable of primary head (see Sect. 1.3)
3 field power cable of primary head (see Sect. 1.3)
4 power supply cable (see Sect. 1.2)
5 internal connection (see Fig. in Sect. 8.8, plug connectors X3 and X5)

ZD Intermediate connection box
Weight approx.
0.5 kg/1.1 lbs

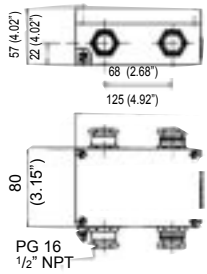

dimensions in mm
(--) dimensions in inch

IFC 020 E

Dimensions (in mm)

Weight approx. 1.4 kg

Subassembly support 3 HE, assembly dimensions in compliance with DIN 41491, Part 5

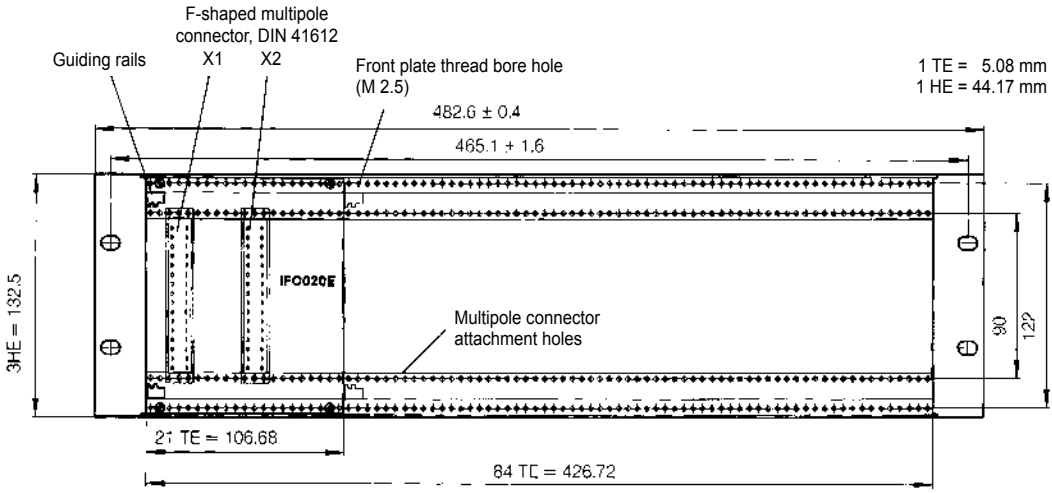

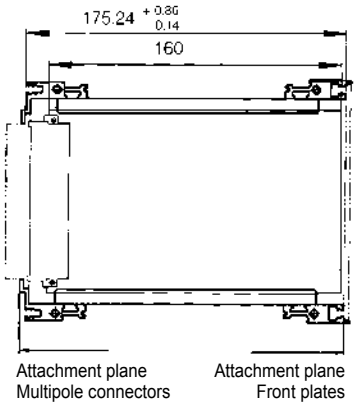

19" Subassembly support purchase order numbers

– Subassembly support including guiding rails, pre-installed 2.07230

– Subassembly support fully installed including IFC 020 E, multipole connectors plus solder points 1.01643.01.00 (230 V) 1.01643.02.00 (115 V)

– Blind plates	2 TE	3.06660.00
	3 TE	3.06738.00
	5 TE	3.06739.00
	8 TE	3.06740.00
	14 TE	3.06741.00
	21 TE	3.07590.00

– Special design of multipole connectors X1 and X2:

Threaded terminal end	5.08400
Wire-Wrap (1 x 1) mm	5.08402
Termi-Point (0.8 x 1.6) mm	5.08403

Separate signal converter in rotatable field housing

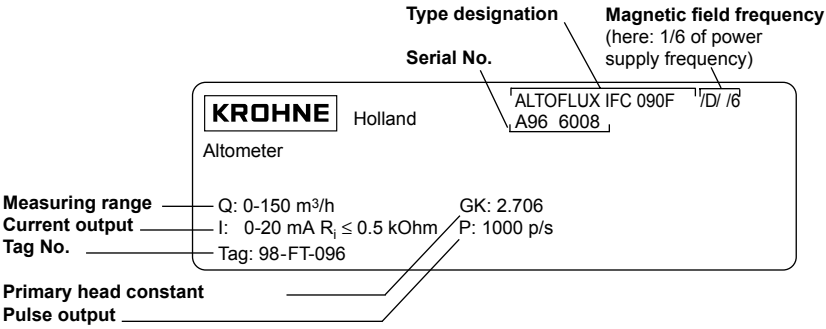

Compact flowmeters

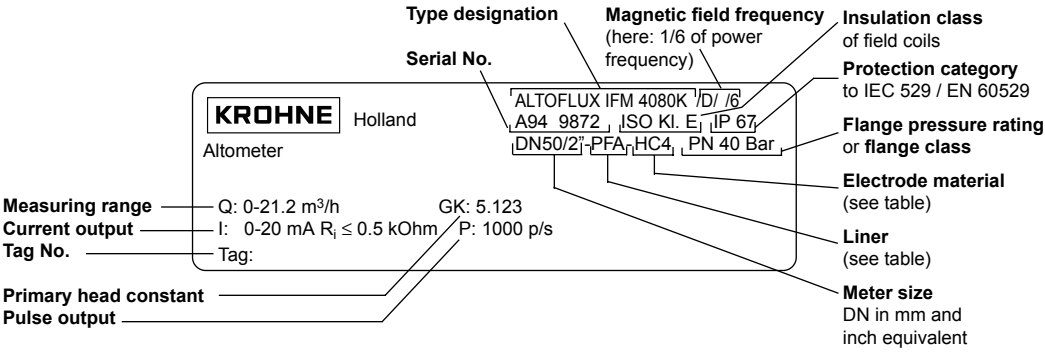

Abbreviations

Liner	
AL	Fused aluminium oxide (99.7% Al_2O_3)
H	Hard rubber
NE	Neoprene
PFA	Teflon®-PFA
PP	Polypropylene
PUI	Irethane
T	Teflon®-PTFE
W	Soft rubber

Electrode material	
C	conductive rubber compound
HB 2	Hastelloy B2
HC 4	Hastelloy C4
IN	Incoloy
M4	Monel 400
Ni	Nickel
PT	Platinum
TA	Tantalum
TI	Titanium
V4A	Stainless steel 1.4571 (SS 316 Ti)
xx / TC	**xx** with conductive PTFE compound (**xx** = base material, e.g. HC4)

Teflon® is a registered trademark of Du Pont

The flowmeter is designed for electrically conductive fluids.

Measurement is based on Faraday's law of induction, according to which a voltage is induced in an electrically conductive body which passes through a magnetic field. The following expression is applicable to the voltage.:

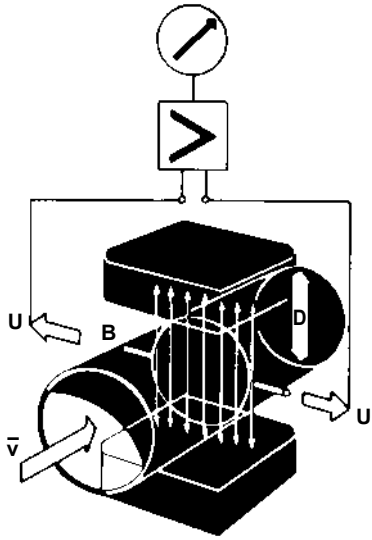

$U = K \times B \times \bar{v} \times D$

where:
U = induced voltage
K = an instrument constant
B = magnetic field strength
$\bar{v}$ = mean velocity
D = pipe diameter

Thus the induced voltage is proportional to the mean flow velocity, when the field strength is constant.

Inside the electromagnetic flowmeter, the fluid passes through a magnetic field applied perpendicular to the direction of flow. An electric voltage is induced by the movement of the fluid (which must have a minimum electrical conductivity). This is proportional to the mean flow velocity and thus to the volume of flow. The induced voltage signal is picked up by two electrodes which are in conductive contact with the fluid and is transmitted to a signal converter for a standardized output signal.

This method of measurement offers the following advantages:

1. No pressure loss through pipe constriction or protruding parts.
2. Since the magnetic field passes through the entire flow area, the signal represents a mean value over the pipe cross-section; therefore, only relatively short straight inlet pipes 5 × DN from the electrode axis are required upstream of the primary head.
3. Only the pipe liner and the electrodes are in contact with the fluid.
4. Already the original signal produced is an electrical voltage which is an exact linear function of the mean flow velocity.
5. Measurement is independent of the flow profile and other properties of the fluid.

The magnetic field of the primary head is generated by a square wave current fed from signal converter to the field coils.

This field current alternates between positive and negative values. Alternate positive and negative flowrate-proportional signal voltages are generated at the same frequency by the effect of the magnetic field, which is proportional to the current. The positive and negative voltages at the primary head electrodes are subtracted from one another in the signal converter. Subtraction always takes place when the field current has reached its stationary value, so that constant interference voltages or external or fault voltages changing slowly in relation to the measuring cycle are suppressed. Power line interference voltages coupled in the primary head or in the connecting cables are similarly suppressed.

12 Block diagram – signal converter

The standard

- high accuracy
- practice oriented standard equipment
- current and pule output (galvanically isolated)
- status output, adjustable for many tasks: indicators for trip point, flow direction and errors.
- IMoCom-Bus suitable for many in- and external tasks
- simple, uniform KROHNE control outline
- very lowpower consumption
- HART® and RS 485-interfaces

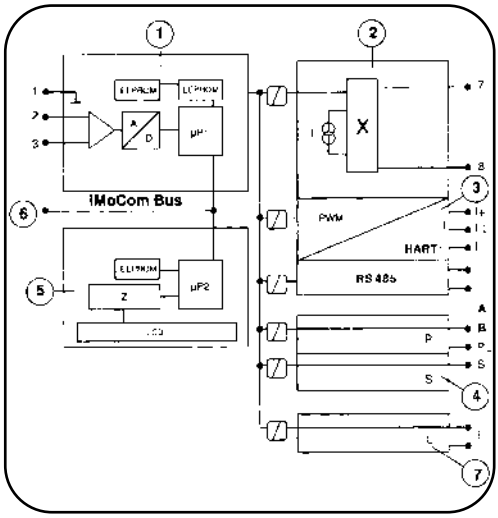

1 Input amplifier

- overdrive-proof signal processing, rapid and accurate
- digital signal processing and sequence control
- patented, high-resolution A/D converter, digitally controlled and monitored
- high signal-to-noise ratio through low-loss field power supply

2 Field power supply

- the low-loss field power supply generates the pulsed, electronically controlled DC current for the magnetic coils of the primary head
- the low-loss regulator reduces the power take-off
- high field current causes a high signal level.

3 Current output

- galvanically isolated from all other groups
- converts the digital output signal from the µP 3 microprocessor into a proportional current
- HART® and RS 485-interfaces, switchable

4 Binary outputs

- galvanically isolated from other groups
- selectable input/output combinations
- pulse output, passive FET optocouplers allow connection of electronic and electromechanical totalizers
- status output, for limit value, error identification, or flow direction in forward/reverse flow mode (F/R)

5 Display/operator control unit

- large-size illuminated LC display
- 3 keys for operator control of the signal converter
- connection to the internal IMoCom bus

6 IMoCom bus plug connector

- for connection of external control and test devices

7 External control input (IFC 020 E only)

- reset of internal totalizer
- zero setting of all outputs

Keyword	Section No.	Fct. No.
A		
Abbreviations	1.3.2, 1.3.4, 2.1, 4.4	
Accuracies	10.3	
ADC = analog-digital converter	4.5, 12	
Ambient temperature	10.4	
Application	5.19	3.06
Automatic range change (BA)	4.4, 5.18	1.06, 1.07
B		
B1/B2 output/input terminals	2.1, 2.6, 5.16	3.07 (1.06, 1.07)
BA = automatic range change	4.4, 5.18	1.06, 1.07
Block diagram IFC 020	12	
B version (basic)	4, 6.2, 8.4, 10.4	
C		
C = control input	2.5, 2.6, 5.9	1.06, 1.07, 3.07
Cable length	1.3.4	
Changeover, power supply	8.1	
Characteristics of outputs	5.15	
Clearing error messages	4.6	
Coding for entry into setting level	5.11	3.04
CONFIG software	6.2	
Connecting & operating points		
– front panel power supply	4.2	
– PCB amplifier	8.9	
– PCB power supply	8.9	
Connection diagrams		
– GS8A simulator	7.6	
– Outputs/inputs	2.6	
– Power supply	1.2, 1.3.5	
Control input C		
– connection	2.6	1.06, 1.07, 3.07
– description	2.5, 2.6, 5.9	1.06, 1.07, 3.07
Conversion factor		
– Quantity (volume)	4.4 + 5.12	3.05
– Time	4.4 + 5.12	3.05
Current output I	2.2, 5.6	1.05
Cut-off “off” value (SMU OFF)	5.3	1.03
Cut-off “on” value (SMU ON)	5.3	1.03
D		
Data	4.4	
Data column	4.1-4-3	
Data errors	4.5	
Dimensions		
– IFC 020 F	10.2	
– ZD	10.2	
Display	4.2, 5.4, 8.4	1.04
DN = meter size in mm	4.4	3.02
DS, signal cable A	1.3.1	
E		
EC = electronic totalizer	2.3, 2.6, 5.8	1.06
Electrical connection		
– GS8A simulator	7.6	
– outputs and inputs	2.6	
– power supply	1.1, 1.3.5	
Electromagnetic compatibility	page 0/4	
EMC = electromechanical totalizer	2.3, 2.6, 5.8	1.06
EN technical standards	page 0/4	
Error	4.5	
Error list	4.5	
Error (messages)	4.5	
– cancel	4.5	
– limits	10.3	
– reset / delete	4.6	
External range change	4.4, 5.18	1.06, 1.07
External totalizers	2.3, 2.6, 5.7	1.06

Keyword	Section No.	Fct. No.
F		
F = forward flow	4.4, 5.3, 5.14	1.04-1.07
F1, F2 = fuses	8.1, 8.5	
Factory settings	3.2	
Fatal error	4.5	
FE = functional ground	1.2, 1.3.3, 1.3.5	
Field power supply	5.12, 10.4, 12	3.02
Flow		
– pulsating	6.4	3.06
– rapid changes	6.5	
Flow direction	4.4, 5.1, 5.14	3.02
Flowrate, rapid changes	6.5	
Flow rate (Q)	4.4, 5.1	3.02
Flow velocity v	4.4, 5.1	3.02
Frequency (pulse output)		
– F_{max}	5.7	1.06, 3.07
– F_{min}	5.7	1.06, 3.07
Frequency output, see pulse output P	2.3, 5.7	1.06, 3.07
Full-scale range $Q_{100\%}$	4.4, 5.1, 5.14	1.01, 3.02
Function(s)	4.4	
Function of keys	4.1-4.3	
Functional checks	7.1 et seq.	
– primary head	7.5	
– setpoint display values	7.6	
– system	7.4	
– test full scale range	7.2	2.01
– zero	7.1	3.03
Functional ground FE	1.2, 1.3.3, 1.3.5	
Functions column	4.1-4.3	
Fuses (F . . .)	8.1, 8.5	
G		
GK = primary (head) constant	4.4, 5.11	3.02
Grounding primary head	1.3.3	
GS 8A = primary (head) simulator	7.6	
H		
Hand held bar magnet	4.2	
Hand held terminal	6.2	
Hardware information	7.3	2.02
HART	6.7	
Hazardous duty areas (Ex)	6.1, page 0/4	
I		
I = current (analog) output	2.3, 5.6	1.05
IEC technical standards	page 0/4	
IMoCom bus (plug)	6.2, 8.9, 12	
Initial start-up	3	
Input (programming)	4.1 et seq.	
Instrument nameplates	10.5	
Interface RS 232	6.2, 10.4	
Intermediate connection box (ZD)	1.3.5, 10.2	
Internal electronic totalizer	2.4, 5.5, 5.7	1.04
K		
Keys	4.1-4.3	
Keystroke combinations for		
– entry into setting level	4.1-4.3	3.04
– error cancellation	4.6	
– quitting setting level	4.1-4.3	
– totalizer reset	4.6	
L		
Language of display texts	5.10	3.01
LCD display, see display	4.2, 4.4, 5.4	1.04
Limit message	4.4, 5.8	1.07
Line voltage, see power supply		
Low-flow cutoff (SMU)	4.4, 5.3	1.03

Keyword	Section No.	Fct. No.
M		
Magnetic field frequency	4.4 + 5.11	3.02
Magnetic sensors	4.2	
Main menu column	4.1	
Main menus	4.1 to 4.3	1.00, 2.00, 3.00
Mass flow measurement, see user defined unit	4.4, 5.13	
Measuring principle	11	
Menu	4.1, 4.4	
Meter size (DN)	4.4, 5.12	3.02
N		
Numerical format, display	5.4, 5.5	1.04
O		
Option = optional equipment	6.2, 10.4	
Order numbers	9	
Outputs		
– characteristics	5.15	
– connection diagrams	2.6	
– setting	4.4	
– – I	5.6	1.05
– – P	5.7, 5.16	1.06, 3.07
– – S	5.8, 5.16	1.06, 1.07, 3.07
– voltage stable when measuring tube empty	6.3	
Overflow, display	5.5	1.04
Overranged		
– I (current output)	2.2, 2.6, 5.6, 5.8	1.06, 1.07
– P (pulse output)	2.3, 2.6, 5.7, 5.8	1.06, 1.07
Overvoltage class	2.1	
P		
P = pulse output	2.4, 4.4, 5.7	1.06
PCB = printed circuit boards	8.9	
PC software	6.2	
PE = protective conductor	1.2	
Power supply (= line voltage)		
– changeover	8.2	
– connection	2.1, 10.4	
– consumption	10.4	
– failure	4.5, 7.4	
– frequency	1.2, 10.4	
– voltage	1.2, 10.4	
Primary constant, see GK	4.4, 5.12	3.02
Primary head		
– constant, see GK	4.4, 5.12	3.02
– simulator GS 8A	7.6	
– testing	7.5	
Primary simulator, see GS 8A	7.6	
Printed circuit boards, see PCB	8.9	
Program organization	4.1	
Programming = input	4.1-4.3	
Programming mode, entry into	4.1-4-3	
Protective conductor PE	1.2	
Pulsating flow	6.4, 6.5, 6.6	3.06
Pulse output P	2.3, 4.4, 5.7	1.06
Pulse width	4.4, 5.7	1.06
Pulses per unit time	4.4, 5.7	1.06
Pulses per unit volume	4.4, 5.7	1.06
Q		
Q = flow rate	4.4, 5.1	1.01, 3.02
$Q_{100\%}$ = full-scale range	4.4, 5.1	1.01, 3.02
R		
R = reverse flow	4.4, 5.14	1.04-1.07
Range change		
– automatic	2.5, 2.6, 5.8, 5.18	1.06, 1.07
– external	2.5, 2.6, 5.9, 5.18	1.06, 1.07
Range setting	4.4, 5.1, 5.12	1.01, 3.02
Replacement		
– electronic unit	8.7	
– power fuses	8.1	
Reset totalizers	4.6	
Reverse flow (R)	4.4, 5.14	1.04-1.07
Revert to		
– functions column	4.1-4.3	
– main menu column	4.1-4.3	
– measuring mode	4.1-4.3	
– submenu column	4.1-4.3	
RS 232 interface	6.2	

Keyword	Section No.	Fct. No.
S		
S = Status output	2.4, 4.4, 5.8	1.06, 1.07, 3.07
Safety isolation	2.1	
Setting level	4.1-4.4	1.00 et seq., 2.00 et seq., 3.00 et seq.
Signal converter IFC 020		
– accuracies	10.3	
– cable A	1.3.1	
– changeover, power supply	8.2	
– connecting & operating points	4.2, 8.9	
– connection to power	1.2	
– functional checks	7.1-7.6,	
– fuses, power	8.5	
– mounting location	1.1	
– nameplates	10.5	
– operator control	4.1-4.3	
– power consumption	10.4	
– printed circuit boards	8.9	
– spare parts	9	
– technical data	10.1-10.4	
Simulator GS 8A	7.6	
SMU = low-flow cutoff	4.4, 5.3	1.03
Software	6.2	
Spare parts, see order numbers	9	
Status output S	2.4, 4.4, 5.8	1.06, 1.07, 3.07
T		
T = time constant	5.2	1.02
Technical data		
– accuracies	10.3	
– dimensions & weights	10.2	
– signal converter IFC 020	10.1-10.4	
Terminals B1/B2	2.1, 2.6, 5.16	3.07 (1.06, 1.07)
Tests, see functional checks	7.1 et seq.	
Time constant (T)	5.2	1.02
Totalizer (internal electronic)	2.3, 5.7	1.06, 3.07
Trip point	2.4, 2.6, 5.8	1.06, 1.07
Troubleshooting, see functional checks	7.1 et seq.	
U		
Units for		
– display	4.4, 5.4	1.04
– flow	4.4, 5.1	1.01
– P	4.4, 5.7	1.06
User-defined unit	4.4, 5.13	3.05
V		
v = flow velocity	4.4, 5.1	3.02
VDE standards	page 0/4	
W		
Weights, see dimensions	10.2	
Z		
Zero check (adjustment)	7.1	3.03
ZD, intermediate connection box	1.3.5, 10.2	

If you need to return flowmeters for testing or repair to Krohne

Your electromagnetic flowmeter
- has been carefully manufactured and tested by a company with ISO 9001 certification
- and volumetrically calibrated in one of the world's most accurate test rigs.

If installed and operated in accordance with these operating instructions, your flowmeter will rarely present any problems.

Should you nevertheless need to return a flowmeter for checkout or repair, please pay strict attention to the following points:

Due to statutory regulations concerning protection of the environment and the health and safety of our personnel, Krohne may only handle, test and repair returned flowmeters that have been in contact with liquids if it is possible to do so without risk to personnel and environment. This means that Krohne can only service your flowmeter if it is accompanied by a certificate in line with the following model confirming that the flowmeter is safe to handle.

If the flowmeter has been operated with toxic, caustic, flammable or water-endangering liquids, you are kindly requested

- to check and ensure, if necessary by rinsing or neutralizing, that all cavities in the flowmeter are free from such dangerous substances.
  (Directions on how you can find out whether the primary head has to be opened and then flushed out or neutralized are obtainable from Krohne on request.)
- to enclose a certificate with the flowmeter confirming that the flowmeter is safe to handle and stating the liquid used.

Krohne regret that they cannot service your flowmeter unless accompanied by such a certificate.

S P E C I M E N certificate

Company: ..... Address: .....

Department: ..... Name: .....

Tel. No.: .....

The enclosed electromagnetic flowmeter

Type: ..... Krohne Order No. or Series No.: .....

has been operated with the following liquid: .....

Because this liquid is

water-endangering * / toxic * / caustic * / flammable *

we have

– checked that all cavities in the flowmeter are free from such substances *

– flushed out and neutralized all cavities in the flowmeter *

(* delete if not applicable)

We confirm that there is no risk to man or environment through any residual liquid contained in this flowmeter.

Date: ..... Signature: .....

Company stamp: