IFC 300 Handbook

Signal converter for electromagnetic flowmeters

Electronic Revision:
ER 3.3.xx
(SW.REV. 3.3x)

The documentation is only complete when used in combination with the relevant documentation for the sensor.

© KROHNE 08/2010 - 4000069803 - MA IFC 300 R04 en

KROHNE

IMPRINT

All rights reserved. It is prohibited to reproduce this documentation, or any part thereof, without the prior written authorisation of KROHNE Messtechnik GmbH.

Subject to change without notice.

Copyright 2010 by
KROHNE Messtechnik GmbH - Ludwig-Krohne-Str. 5 - 47058 Duisburg (Germany)

1 Safety instructions 7

1.1 Software history 7
1.2 Intended use 9
1.3 Certifications 9
1.4 Safety instructions from the manufacturer 10
1.4.1 Copyright and data protection 10
1.4.2 Disclaimer 10
1.4.3 Product liability and warranty 11
1.4.4 Information concerning the documentation 11
1.4.5 Warnings and symbols used 12
1.5 Safety instructions for the operator 12

2 Device description 13

2.1 Scope of delivery 13
2.2 Device description 15
2.2.1 Field housing 16
2.2.2 Wall-mounted housing 17
2.3 Nameplates 18
2.3.1 Compact version (example) 18
2.3.2 Remote version (example) 19
2.3.3 Electrical connection data of inputs/outputs (example of basic version) 20

3 Installation 21

3.1 Notes on installation 21
3.2 Storage 21
3.3 Transport 21
3.4 Installation specifications 21
3.5 Mounting of the compact version 22
3.6 Mounting the field housing, remote version 22
3.6.1 Pipe mounting 22
3.6.2 Wall mounting 23
3.6.3 Turning the display of the field housing version 24
3.7 Mounting the wall-mounted housing, remote version 25
3.7.1 Pipe mounting 25
3.7.2 Wall mounting 26

4 Electrical connections 27

4.1 Safety instructions 27
4.2 Important notes on electrical connection 27
4.3 Electrical cables for remote device versions, notes 28
4.3.1 Notes on signal cables A and B 28
4.3.2 Notes on field current cable C 28
4.3.3 Requirements for signal cables provided by the customer 29

4.4 Preparing the signal and field current cables (except TIDALFLUX) 30
4.4.1 Signal cable A (type DS 300), construction 30
4.4.2 Preparing signal cable A, connection to signal converter 31
4.4.3 Length of signal cable A 33
4.4.4 Signal cable B (type BTS 300), construction 34
4.4.5 Preparing signal cable B, connection to signal converter 34
4.4.6 Length of signal cable B 37
4.4.7 Preparing field current cable C, connection to signal converter 38
4.4.8 Preparing signal cable A, connection to measuring sensor 40
4.4.9 Preparing signal cable B, connection to measuring sensor 41
4.4.10 Preparing field current cable C, connection to measuring sensor 42
4.5 Connecting the signal and field current cables (except TIDALFLUX) 43
4.5.1 Connecting the signal and field current cables, field housing 44
4.5.2 Connecting the signal and field current cables, wall-mounted housing 45
4.5.3 Connecting the signal and field current cables, 19" rack-mounted housing (28 TE) 46
4.5.4 Connecting the signal and field current cables, 19" rack-mounted housing (21 TE) 47
4.5.5 Connection diagram for measuring sensor, field housing 48
4.5.6 Connection diagram for measuring sensor, wall-mounted housing 49
4.5.7 Connection diagram for measuring sensor, 19" rack-mounted housing (28 TE) 50
4.5.8 Connection diagram for measuring sensor, 19" rack-mounted housing (21 TE) 51
4.6 Preparing and connecting the signal and field current cables (only TIDALFLUX) 52
4.6.1 Cable lengths 52
4.6.2 Signal cable A (type DS 300), construction 53
4.6.3 Preparing signal cable A, connection to signal converter 54
4.6.4 Prepare signal cable A, connect to measuring sensor 55
4.6.5 Signal cable B (type BTS 300), construction 56
4.6.6 Preparing signal cable B, connection to signal converter 56
4.6.7 Preparing signal cable B, connection to measuring sensor 58
4.6.8 Preparing field current cable C, connection to signal converter 59
4.6.9 Preparing field current cable C, connection to measuring sensor 60
4.6.10 Interface cable 62
4.6.11 Connection of cables 63
4.7 Grounding the measuring sensor 64
4.7.1 Classical method 64
4.7.2 Virtual reference (not valid for TIDALFLUX 4000 & OPTIFLUX 7300 C) 65
4.8 Power supply connection 65
4.9 Inputs and outputs, overview 68
4.9.1 Combinations of the inputs/outputs (I/Os) 68
4.9.2 Description of the CG number 69
4.9.3 Fixed, non-alterable input/output versions 70
4.9.4 Alterable input/output versions 72
4.10 Description of the inputs and outputs 73
4.10.1 Current output 73
4.10.2 Pulse and frequency output 74
4.10.3 Status output and limit switch 75
4.10.4 Control input 76
4.10.5 Current input 77
4.11 Electrical connection of the inputs and outputs 78
4.11.1 Field housing, electrical connection of the inputs and outputs 78
4.11.2 Wall-mounted housing, electrical connection of the inputs and outputs 79
4.11.3 19" rack-mounted housing (28 TE), electrical connection of the inputs and outputs 80
4.11.4 19" rack-mounted housing (21 TE), electrical connection of the inputs and outputs 81
4.11.5 Laying electrical cables correctly 81

4.12 Connection diagrams of inputs and outputs ... 82
4.12.1 Important notes ... 82
4.12.2 Description of the electrical symbols ... 83
4.12.3 Basic inputs/outputs ... 84
4.12.4 Modular inputs/outputs and bus systems ... 87
4.12.5 Ex i inputs/outputs ... 96
4.12.6 HART® connection ... 101

5 Start-up 103

5.1 Switching on the power ... 103
5.2 Starting the signal converter ... 103

6 Operation 104

6.1 Display and operating elements ... 104
6.1.1 Display in measuring mode with 2 or 3 measured values ... 105
6.1.2 Display for selection of sub-menu and functions, 3 lines ... 105
6.1.3 Display when setting parameters, 4 lines ... 106
6.1.4 Display when changing parameters, 4 lines ... 106
6.1.5 Using an IR interface (option) ... 107
6.2 Menu structure ... 108
6.3 Function tables ... 111
6.3.1 Menu A, quick setup ... 111
6.3.2 Menu B, test ... 113
6.3.3 Menu C, setup ... 115
6.3.4 Set free units ... 133
6.4 Description of functions ... 134
6.4.1 Reset counter in the menu "quick setup" ... 134
6.4.2 Deleting error messages in the menu "quick setup" ... 134
6.5 Status messages and diagnostic information ... 135

7 Service 141

7.1 Spare parts availability ... 141
7.2 Availability of services ... 141
7.3 Repairs ... 141
7.4 Returning the device to the manufacturer ... 141
7.4.1 General information ... 141
7.4.2 Form (for copying) to accompany a returned device ... 142
7.5 Disposal ... 142

8 Technical data 143

8.1 Measuring principle ... 143
8.2 Technical data ... 144

8.3 Dimensions and weights ... 156
8.3.1 Housing ... 156
8.3.2 Mounting plate, field housing ... 157
8.3.3 Mounting plate, wall-mounted housing ... 157
8.4 Flow tables ... 158
8.5 Measuring accuracy (except TIDALFLUX) ... 160
8.6 Measuring accuracy (only TIDALFLUX) ... 161

9 Description of HART interface 163

9.1 General description ... 163
9.2 Software history ... 163
9.3 Connection variants ... 164
9.3.1 Point-to-Point connection - analogue / digital mode ... 165
9.3.2 Multi-Drop connection (2-wire connection) ... 166
9.3.3 Multi-Drop connection (3-wire connection) ... 167
9.4 Inputs/outputs and HART® dynamic variables and device variables ... 168
9.5 Parameter for the basic configuration ... 169
9.6 Field Communicator 375/475 (FC 375/475) ... 170
9.6.1 Installation ... 170
9.6.2 Operation ... 170
9.6.3 Parameter for the basic configuration ... 170
9.7 Asset Management Solutions (AMS) ... 171
9.7.1 Installation ... 171
9.7.2 Operation ... 171
9.7.3 Parameter for the basic configuration ... 171
9.8 Field Device Manager (FDM) ... 172
9.8.1 Installation ... 172
9.8.2 Operation ... 172
9.9 Process Device Manager (PDM) ... 172
9.9.1 Installation ... 172
9.9.2 Operation ... 173
9.9.3 Parameter for the basic configuration ... 173
9.10 Field Device Tool / Device Type Manager (FDT / DTM) ... 174
9.10.1 Installation ... 174
9.10.2 Operation ... 174
9.11 Appendix A: HART® menu tree for Basic-DD ... 174
9.11.1 Overview Basic-DD menu tree (positions in menu tree) ... 175
9.11.2 Basic-DD menu tree (details for settings) ... 176
9.12 Appendix B: HART® menu tree for AMS ... 180
9.12.1 Overview AMS menu tree (positions in menu tree) ... 180
9.12.2 AMS menu tree (details for settings) ... 181
9.13 Appendix C: HART® menu tree for PDM ... 185
9.13.1 Overview PDM menu tree (positions in menu tree) ... 185
9.13.2 PDM menu tree (details for settings) ... 187

10 Notes 191

1.1 Software history

The "Electronic Revision" (ER) is consulted to document the revision status of electronic equipment according to NE 53 for all GDC devices. It is easy to see from the ER whether troubleshooting or larger changes in the electronic equipment have taken place and how that has affected the compatibility.

Changes and effect on compatibility

1	Downwards compatible changes and fault repair with no effect on operation (e.g. spelling mistakes on display)	
2-_	Downwards compatible hardware and/or software change of interfaces:	
	H	HART®
	P	PROFIBUS
	F	Foundation Fieldbus
	M	Modbus
	X	all interfaces
3-_	Downwards compatible hardware and/or software change of inputs and outputs:	
	I	Current output
	F, P	Frequency / pulse output
	S	Status output
	C	Control input
	CI	Current input
	X	all inputs and outputs
4	Downwards compatible changes with new functions	
5	Incompatible changes, i.e. electronic equipment must be changed.	

INFORMATION!
In the table below, "x" is a placeholder for possible multi-digit alphanumeric combinations, depending on the available version.

Release date	Electronic Revision	Changes and compatibility	Documentation
2006-12-12	ER 3.1.0x (SW.REV. 3.10 (2.21))	-	-
2007-02-07	ER 3.1.1x (SW.REV. 3.10 (2.21))	1; 2	MA IFC 300 R02
2007-03-12	ER 3.1.2x (SW.REV. 3.10 (2.21))	1; 2-H; 3-I	MA IFC 300 R02
2007-05-25	ER 3.1.3x (SW.REV. 3.10 (2.21))	1; 3-I	MA IFC 300 R02
2008-05-13	ER 3.2.0x (SW.REV. 3.20 (3.00))	1; 2-X; 3-X; 4	MA IFC 300 R03
2008-07-25	ER 3.2.1x (SW.REV. 3.20 (3.03))	1	MA IFC 300 R03
2008-08-29	ER 3.2.2x (SW.REV. 3.20 (3.03))	1	MA IFC 300 R03
2008-10-30	ER 3.2.4x (SW.REV. 3.20 (3.03))	1	MA IFC 300 R03
2009-05-15	ER 3.2.5x (SW.REV. 3.20 (3.03))	2-F	MA IFC 300 R03
2009-12-07	ER 3.2.6x (SW.REV. 3.20 (3.03))	1	MA IFC 300 R03
2009-11-02	ER 3.2.7x (SW.REV. 3.20 (3.03))	1	MA IFC 300 R03
2009-12-07	ER 3.2.8x (SW.REV. 3.20 (3.03))	1	MA IFC 300 R03
2010	ER 3.3.0x (SW.REV. 3.30 (3.04))	1; 2-H; 2-F; 3-X; 4	MA IFC 300 R04

INFORMATION!
For the measuring sensors TIDALFLUX 4000 and OPTIFLUX 7000 the software version ER 3.3.0x and higher (SW.REV. 3.30 (3.04)) is valid!

1.2 Intended use

The electromagnetic flowmeters are designed exclusively to measure the flow and conductivity of electrically conductive, liquid media.

DANGER!
For devices used in hazardous areas, additional safety notes apply; please refer to the Ex documentation.

WARNING!
If the device is not used according to the operating conditions (refer to chapter "Technical data), the intended protection could be affected.

1.3 Certifications

CE marking

The device fulfils the statutory requirements of the following EC directives:

- Low Voltage Directive 2006/95/EC
- EMC Directive 2004/108/EC

as well as

- EN 61010
- EMC specification acc. to EN 61326/A1
- NAMUR recommendations NE 21 and NE 43

The manufacturer certifies successful testing of the product by applying the CE marking.

DANGER!
For devices used in hazardous areas, additional safety notes apply; please refer to the Ex documentation.

1.4 Safety instructions from the manufacturer

1.4.1 Copyright and data protection

The contents of this document have been created with great care. Nevertheless, we provide no guarantee that the contents are correct, complete or up-to-date.

The contents and works in this document are subject to copyright. Contributions from third parties are identified as such. Reproduction, processing, dissemination and any type of use beyond what is permitted under copyright requires written authorisation from the respective author and/or the manufacturer.

The manufacturer tries always to observe the copyrights of others, and to draw on works created in-house or works in the public domain.

The collection of personal data (such as names, street addresses or e-mail addresses) in the manufacturer's documents is always on a voluntary basis whenever possible. Whenever feasible, it is always possible to make use of the offerings and services without providing any personal data.

We draw your attention to the fact that data transmission over the Internet (e.g. when communicating by e-mail) may involve gaps in security. It is not possible to protect such data completely against access by third parties.

We hereby expressly prohibit the use of the contact data published as part of our duty to publish an imprint for the purpose of sending us any advertising or informational materials that we have not expressly requested.

1.4.2 Disclaimer

The manufacturer will not be liable for any damage of any kind by using its product, including, but not limited to direct, indirect, incidental, punitive and consequential damages.

This disclaimer does not apply in case the manufacturer has acted on purpose or with gross negligence. In the event any applicable law does not allow such limitations on implied warranties or the exclusion of limitation of certain damages, you may, if such law applies to you, not be subject to some or all of the above disclaimer, exclusions or limitations.

Any product purchased from the manufacturer is warranted in accordance with the relevant product documentation and our Terms and Conditions of Sale.

The manufacturer reserves the right to alter the content of its documents, including this disclaimer in any way, at any time, for any reason, without prior notification, and will not be liable in any way for possible consequences of such changes.

1.4.3 Product liability and warranty

The operator shall bear responsibility for the suitability of the device for the specific purpose. The manufacturer accepts no liability for the consequences of misuse by the operator. Improper installation and operation of the devices (systems) will cause the warranty to be void. The respective "Standard Terms and Conditions" which form the basis for the sales contract shall also apply.

1.4.4 Information concerning the documentation

To prevent any injury to the user or damage to the device it is essential that you read the information in this document and observe applicable national standards, safety requirements and accident prevention regulations.

If this document is not in your native language and if you have any problems understanding the text, we advise you to contact your local office for assistance. The manufacturer can not accept responsibility for any damage or injury caused by misunderstanding of the information in this document.

This document is provided to help you establish operating conditions, which will permit safe and efficient use of this device. Special considerations and precautions are also described in the document, which appear in the form of underneath icons.

1.4.5 Warnings and symbols used

Safety warnings are indicated by the following symbols.

DANGER!
This information refers to the immediate danger when working with electricity.

DANGER!
This warning refers to the immediate danger of burns caused by heat or hot surfaces.

DANGER!
This warning refers to the immediate danger when using this device in a hazardous atmosphere.

DANGER!
These warnings must be observed without fail. Even partial disregard of this warning can lead to serious health problems and even death. There is also the risk of seriously damaging the device or parts of the operator's plant.

WARNING!
Disregarding this safety warning, even if only in part, poses the risk of serious health problems. There is also the risk of damaging the device or parts of the operator's plant.

CAUTION!
Disregarding these instructions can result in damage to the device or to parts of the operator's plant.

INFORMATION!
These instructions contain important information for the handling of the device.

LEGAL NOTICE!
This note contains information on statutory directives and standards.

- HANDLING
  This symbol designates all instructions for actions to be carried out by the operator in the specified sequence.

➲ RESULT
This symbol refers to all important consequences of the previous actions.

1.5 Safety instructions for the operator

WARNING!
In general, devices from the manufacturer may only be installed, commissioned, operated and maintained by properly trained and authorized personnel.
This document is provided to help you establish operating conditions, which will permit safe and efficient use of this device.

2.1 Scope of delivery

INFORMATION!
Inspect the cartons carefully for damage or signs of rough handling. Report damage to the carrier and to the local office of the manufacturer.

INFORMATION!
Check the packing list to check if you received completely all that you ordered.

INFORMATION!
Look at the device nameplate to ensure that the device is delivered according to your order. Check for the correct supply voltage printed on the nameplate.

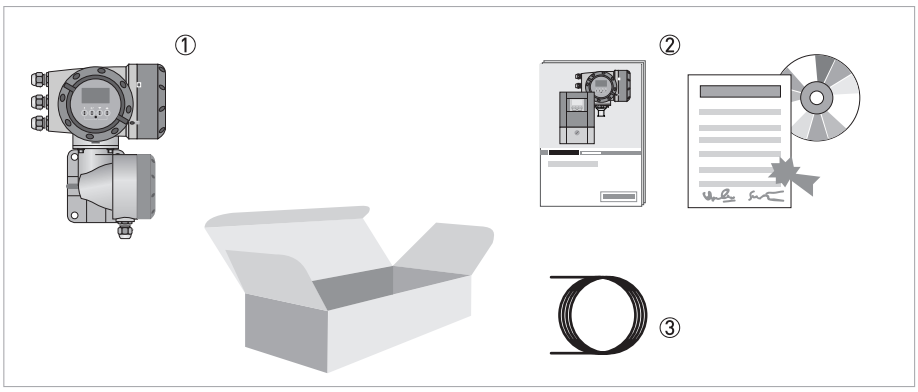

Figure 2-1: Scope of delivery

① Device in the version as ordered
② Documentation (calibration report, Quick Start, CD-Rom with product documentation for measuring sensor and signal converter)
③ Signal cable (only for remote version)

Possible scope of delivery for signal converter / measuring sensor

Measuring sensor	Measuring sensor + signal converter IFC 300			
	Compact	Remote field housing	Remote wall-mounted housing	Remote rack-mounted housing R (28 TE) or (21 TE)
OPTIFLUX 1000	OPTIFLUX 1300 C	OPTIFLUX 1300 F	OPTIFLUX 1300 W	OPTIFLUX 1300 R
OPTIFLUX 2000	OPTIFLUX 2300 C	OPTIFLUX 2300 F	OPTIFLUX 2300 W	OPTIFLUX 2300 R
OPTIFLUX 4000	OPTIFLUX 4300 C	OPTIFLUX 4300 F	OPTIFLUX 4300 W	OPTIFLUX 4300 R
OPTIFLUX 5000	OPTIFLUX 5300 C	OPTIFLUX 5300 F	OPTIFLUX 5300 W	OPTIFLUX 5300 R
OPTIFLUX 6000	OPTIFLUX 6300 C	OPTIFLUX 6300 F	OPTIFLUX 6300 W	OPTIFLUX 6300 R
OPTIFLUX 7000	OPTIFLUX 7300 C	-	-	-
WATERFLUX 3000	WATERFLUX 3300 C	WATERFLUX 3300 F	WATERFLUX 3300 W	WATERFLUX 3300 R
TIDALFLUX 4000	-	TIDALFLUX 4300 F	-	-

2.2 Device description

Electromagnetic flowmeters are designed exclusively to measure the flow and conductivity of electrically conductive, liquid media.

Your measuring device is supplied ready for operation. The factory settings for the operating data have been made in accordance with your order specifications.

The following versions are available:

- Compact version (the signal converter is mounted directly on the measuring sensor)
- Remote version (electrical connection to the measuring sensor via field current and signal cable)

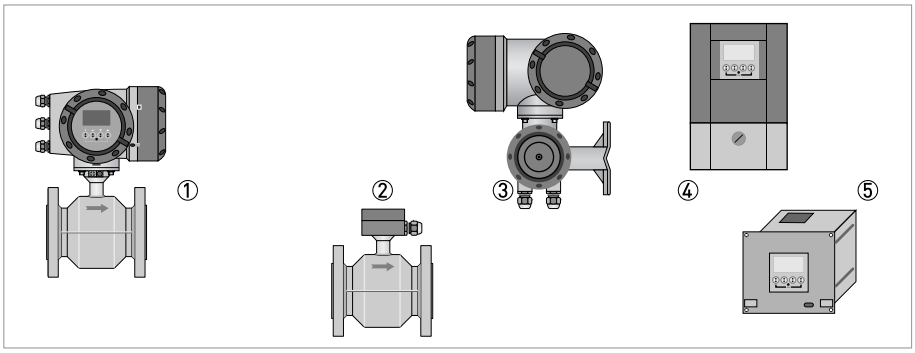

Figure 2-2: Device versions

① Compact version
② Measuring sensor with connection box
③ Field housing
④ Wall-mounted housing
⑤ 19" rack-mounted housing

2.2.1 Field housing

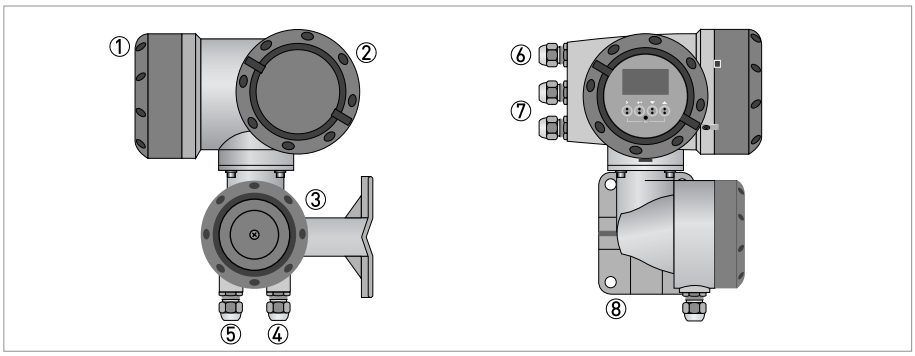

Figure 2-3: Construction of the field housing

① Cover for electronics and display
② Cover for power supply and inputs/outputs terminal compartment
③ Cover for for measuring sensor terminal compartment with locking screw
④ Cable entry for measuring sensor signal cable
⑤ Cable entry for measuring sensor field current cable
⑥ Cable entry for power supply
⑦ Cable entry for inputs and outputs
⑧ Mounting plate for pipe and wall mounting

CAUTION!
The design of the TIDALFLUX field housing is different to the standard version shown here. There is an additional bush for the interface cable. For detailed information refer to Connection of cables on page 63.

INFORMATION!
Each time a housing cover is opened, the thread should be cleaned and greased. Use only resin-free and acid-free grease.
Ensure that the housing gasket is properly fitted, clean and undamaged.

2.2.2 Wall-mounted housing

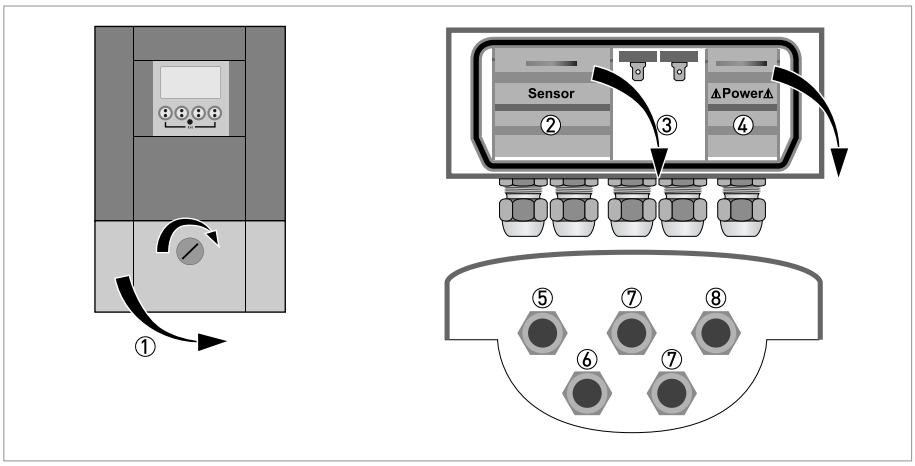

Figure 2-4: Construction of wall-mounted housing

① Cover for terminal compartments
② Terminal compartment for measuring sensor
③ Terminal compartment for inputs and outputs
④ Terminal compartment for power supply with safety cover (shock-hazard protection)
⑤ Cable entry for signal cable
⑥ Cable entry for field current cable
⑦ Cable entry for inputs and outputs
⑧ Cable entry for power supply

① Turn lock to the right and open the cover.

2.3 Nameplates

INFORMATION!
Look at the device nameplate to ensure that the device is delivered according to your order. Check for the correct supply voltage printed on the nameplate.

2.3.1 Compact version (example)

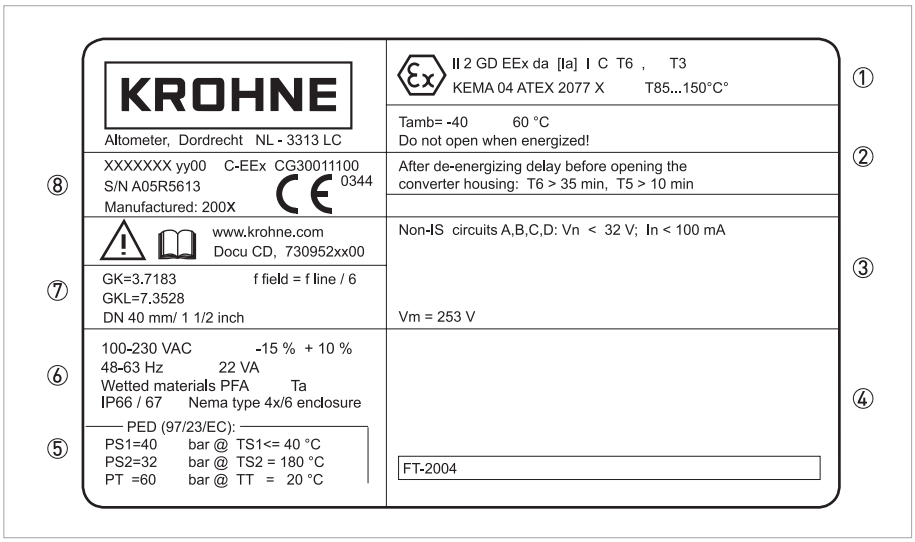

Figure 2-5: Example of a nameplate for compact version

① Approvals-related information: Ex approval, EC type test certificate, hygienic approvals, etc.
② Approvals-related thresholds
③ Approvals-related connection data of the inputs/outputs; V_m = max. power supply
④ Approvals-related data (e.g. accuracy class, measuring range, temperature thresholds, pressure thresholds and viscosity thresholds)
⑤ Approvals-related pressure and temperature thresholds
⑥ Power supply; protection category; materials of wetted parts
⑦ GK/GKL values (measuring sensor constants); size (mm /inches); field frequency
⑧ Product designation, serial number and manufacturing date

2.3.2 Remote version (example)

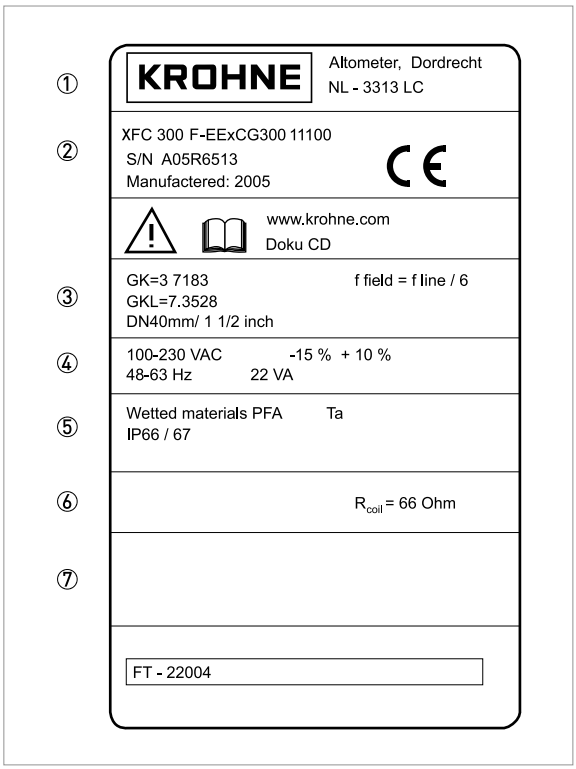

Figure 2-6: Example of a nameplate for remote version

① Manufacturer
② Product designation, serial number and manufacturing date
③ GK/GKL values (measuring sensor constants); size (mm /inches); field frequency
④ Power supply
⑤ Materials of wetted parts
⑥ Field coil resistance
⑦ Approvals-related data (e.g. accuracy class, measuring range, temperature thresholds, pressure thresholds and viscosity thresholds)

2.3.3 Electrical connection data of inputs/outputs (example of basic version)

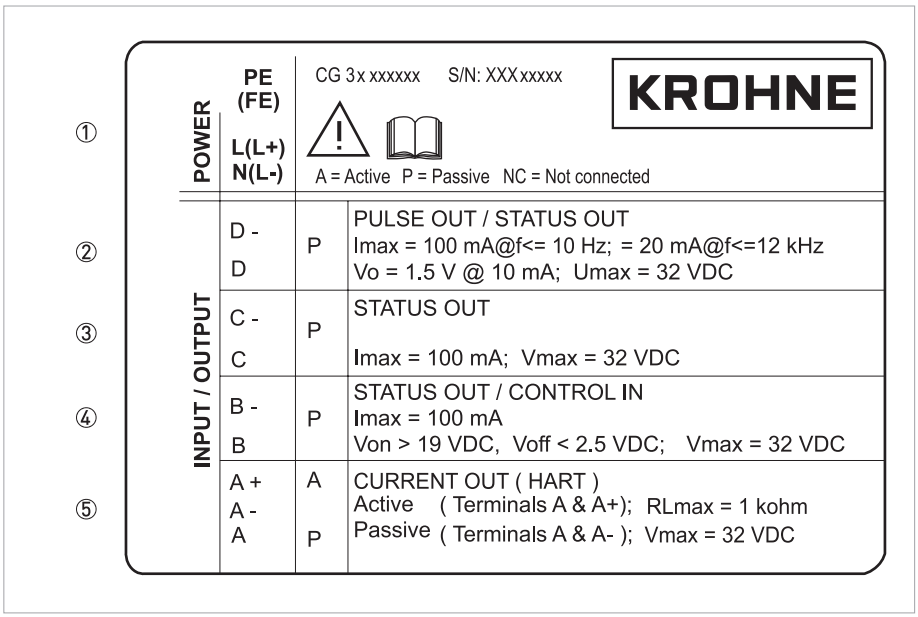

Figure 2-7: Example of a nameplate for electrical connection data of inputs and outputs

① Power supply (AC: L and N; DC: L+ and L-; PE for ≥ 24 VAC; FE for ≤ 24 VAC and DC)
② Connection data of connection terminal D/D-
③ Connection data of connection terminal C/C-
④ Connection data of connection terminal B/B-
⑤ Connection data of connection terminal A/A-; A+ only operable in the basic version

- A = active mode; the signal converter supplies the power for connection of the subsequent devices
- P = passive mode; external power supply required for operation of the subsequent devices
- N/C = connection terminals not connected

3.1 Notes on installation

INFORMATION!
Inspect the cartons carefully for damage or signs of rough handling. Report damage to the carrier and to the local office of the manufacturer.

INFORMATION!
Check the packing list to check if you received completely all that you ordered.

INFORMATION!
Look at the device nameplate to ensure that the device is delivered according to your order. Check for the correct supply voltage printed on the nameplate.

3.2 Storage

- Store the device in a dry, dust-free location.
- Avoid continuous direct sunlight.
- Store the device in its original packing.
- Storage temperature: -50...+70°C / -58...+158°F

3.3 Transport

Signal converter

- No special requirements.

Compact version

- Do not lift the device by the signal converter housing.
- Do not use lifting chains.
- To transport flange devices, use lifting straps. Wrap these around both process connections.

3.4 Installation specifications

INFORMATION!
The following precautions must be taken to ensure reliable installation.

- *Make sure that there is adequate space to the sides.*
- *Protect the signal converter from direct sunlight and install a sun shade if necessary.*
- *Signal converters installed in control cabinets require adequate cooling, e.g. by fan or heat exchanger.*
- *Do not expose the signal converter to intense vibration. The flowmeters are tested for a vibration level in accordance with IEC 68-2-3.*

3.5 Mounting of the compact version

INFORMATION!
The signal converter is mounted directly on the measuring sensor. For installation of the flowmeter, please observe the instructions in the supplied product documentation for the measuring sensor.

3.6 Mounting the field housing, remote version

INFORMATION!
Assembly materials and tools are not part of the delivery. Use the assembly materials and tools in compliance with the applicable occupational health and safety directives.

3.6.1 Pipe mounting

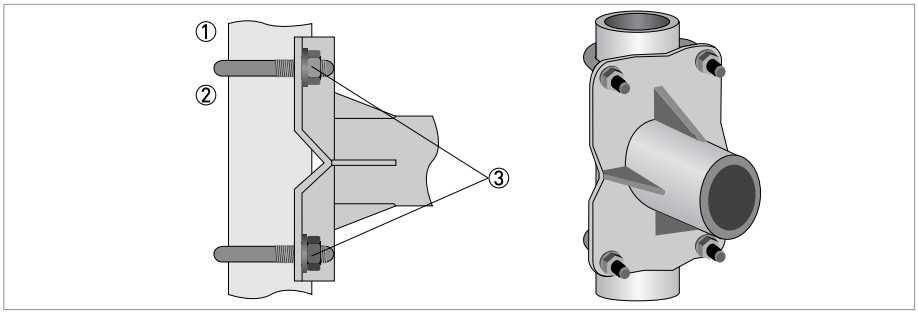

Figure 3-1: Pipe mounting of the field housing

① Fix the signal converter to the pipe.
② Fasten the signal converter using standard U-bolts and washers.
③ Tighten the nuts.

3.6.2 Wall mounting

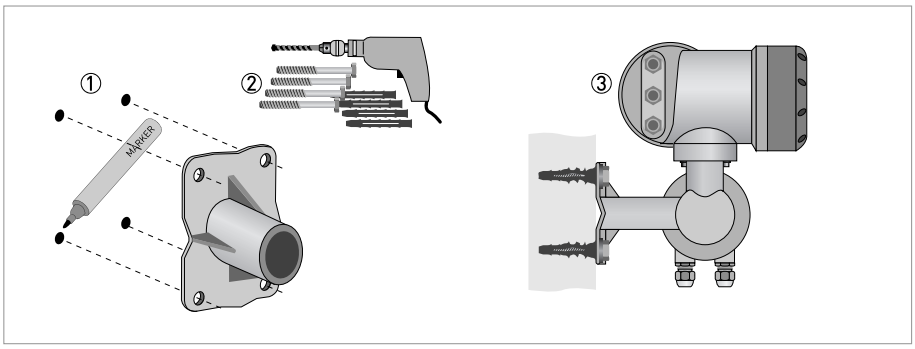

Figure 3-2: Wall mounting of the field housing

① Prepare the holes with the aid of the mounting plate. For further information refer to *Mounting plate, field housing* on page 157.
② Use the mounting material and tools in compliance with the applicable occupational health and safety directives.
③ Fasten the housing securely to the wall.

Mounting multiple devices next to each other

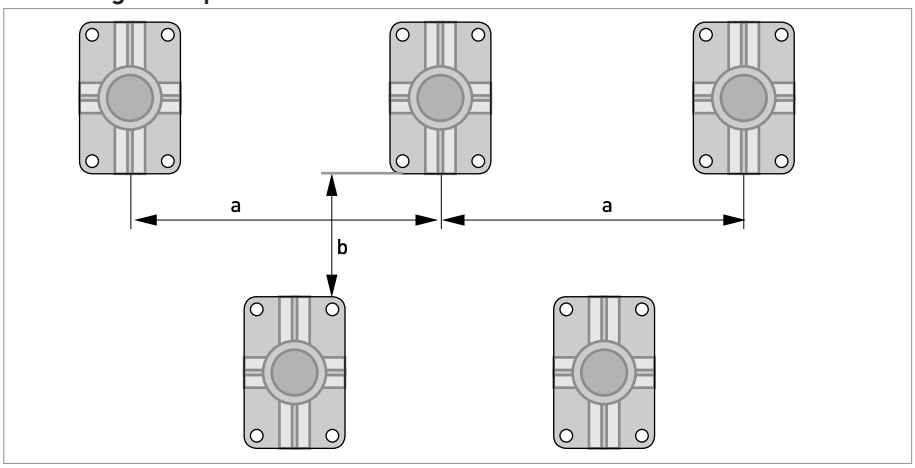

a ≥ 600 mm / 23.6"
b ≥ 250 mm / 9.8"

3.6.3 Turning the display of the field housing version

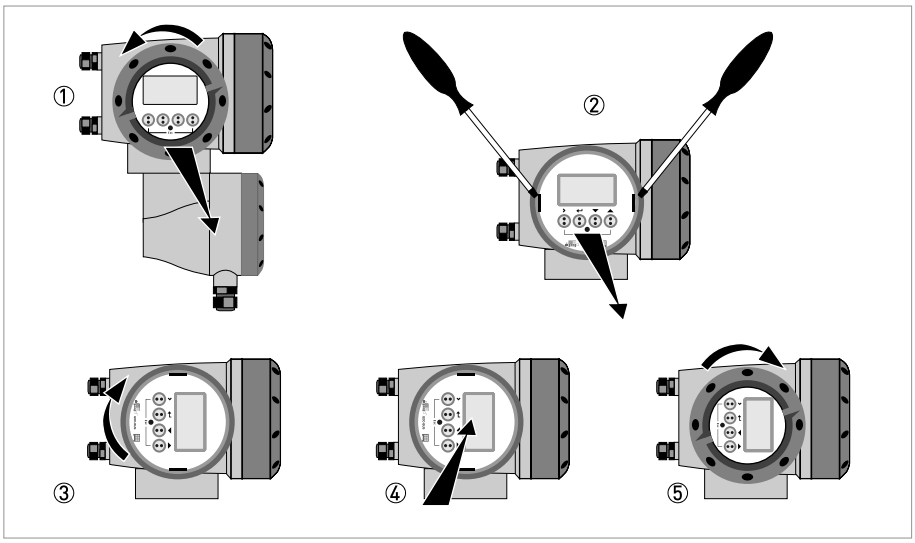

Figure 3-3: Turning the display of the field housing version

The display of the field housing version can be turned in 90° increments.

① Unscrew the cover from the display and operation control unit.
② Using a suitable tool, pull out the two metal puller devices to the left and right of the display.
③ Pull out the display between the two metal puller devices and rotate it to the required position.
④ Slide the display and then the metal puller devices back into the housing.
⑤ Re-fit the cover and tighten it by hand.

CAUTION!
The ribbon cable of the display must not be folded or twisted repeatedly.

INFORMATION!
Each time a housing cover is opened, the thread should be cleaned and greased. Use only resin-free and acid-free grease.
Ensure that the housing gasket is properly fitted, clean and undamaged.

3.7 Mounting the wall-mounted housing, remote version

INFORMATION!
Assembly materials and tools are not part of the delivery. Use the assembly materials and tools in compliance with the applicable occupational health and safety directives.

3.7.1 Pipe mounting

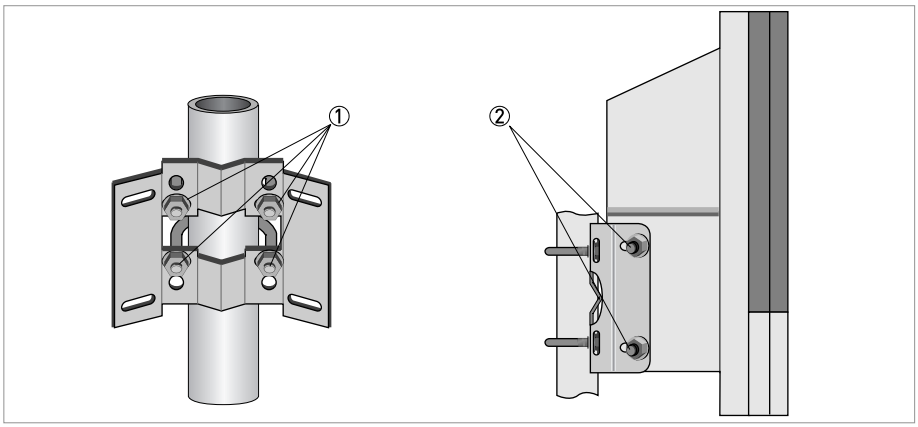

Figure 3-4: Pipe mounting of the wall-mounted housing

① Fasten the mounting plate to the pipe with standard U-bolts, washers and fastening nuts.
② Screw the signal converter to the mounting plate with the nuts and washers.

3.7.2 Wall mounting

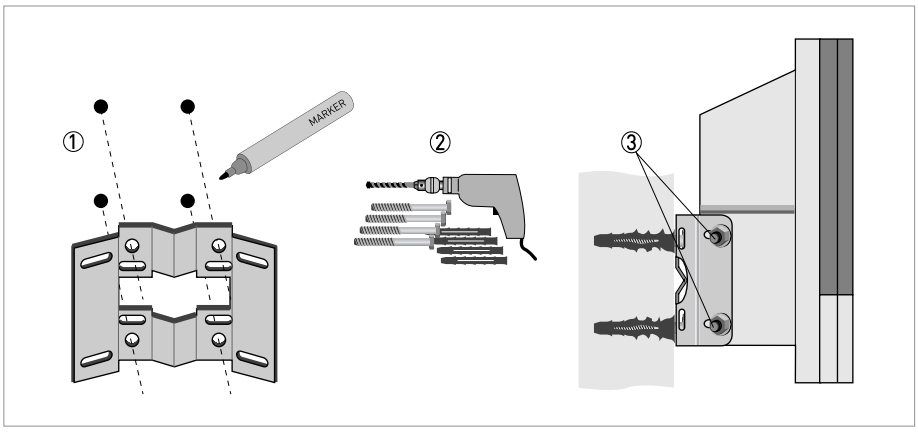

Figure 3-5: Wall mounting of the wall-mounted housing

① Prepare the holes with the aid of the mounting plate. For further information refer to *Mounting plate, wall-mounted housing* on page 157.
② Fasten the mounting plate securely to the wall.
③ Screw the signal converter to the mounting plate with the nuts and washers.

Mounting multiple devices next to each other

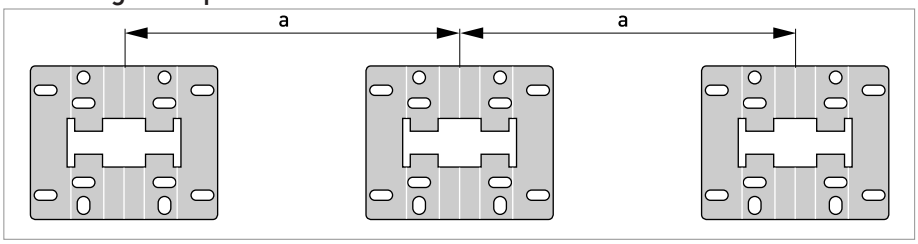

a ≥ 240 mm / 9.4"

4.1 Safety instructions

DANGER!
All work on the electrical connections may only be carried out with the power disconnected. Take note of the voltage data on the nameplate!

DANGER!
Observe the national regulations for electrical installations!

DANGER!
For devices used in hazardous areas, additional safety notes apply; please refer to the Ex documentation.

WARNING!
Observe without fail the local occupational health and safety regulations. Any work done on the electrical components of the measuring device may only be carried out by properly trained specialists.

INFORMATION!
Look at the device nameplate to ensure that the device is delivered according to your order. Check for the correct supply voltage printed on the nameplate.

4.2 Important notes on electrical connection

DANGER!
Electrical connection is carried out in conformity with the VDE 0100 directive "Regulations for electrical power installations with line voltages up to 1000 V" or equivalent national regulations.

CAUTION!
- *Use suitable cable entries for the various electrical cables.*
- *The sensor and converter are configured together in the factory. For this reason, please connect the devices in pairs. Ensure that the sensor constant GK/GKL (see type plates) are identically set.*
- *If delivered separately or when installing devices that were not configured together, set the converter to the DN size and GK/GKL of the sensor, refer to Function tables on page 111.*

4.3 Electrical cables for remote device versions, notes

4.3.1 Notes on signal cables A and B

INFORMATION!
The signal cables A (type DS 300) with double shield and B (type BTS 300) with triple shield ensure proper transmission of measured values.

Observe the following notes:

- Lay the signal cable with fastening elements.
- It is permissible to lay the signal cable in water or in the ground.
- The insulating material is flame-retardant to EN 50625-2-1, IEC 60322-1.
- The signal cable does not contain any halogens and is unplasticized, and remains flexible at low temperatures.
- The connection of the inner shield is carried out via the stranded drain wire (1).
- The connection of the outer shield is carried out via the shield (60) or the stranded drain wire (6), depending on the housing version. Observe the following notes.
- The signal cable type B cannot be used with options with "virtual reference"!

4.3.2 Notes on field current cable C

DANGER!
All versions except TIDALFLUX:
*A non-shielded three-wire copper cable is sufficient for the field current cable. If you nevertheless use shielded cables, the shield must **NOT** be connected in the housing of the signal converter.*

Only TIDALFLUX:
*A shielded two-wire copper cable is used as the field current cable. The shielding **MUST** be connected in the housing of the measuring sensor and signal converter.*

INFORMATION!
The field current cable is not part of the scope of delivery.

4.3.3 Requirements for signal cables provided by the customer

INFORMATION!
If the signal cable was not ordered, it is to be provided by the customer. The following requirements regarding the electrical values of the signal cable must be observed:

Electrical safety

- To EN 60811 (Low Voltage Directive) or equivalent national regulations.

Capacitance of the insulated conductors

- Insulated conductor / insulated conductor < 50 pF/m
- Insulated conductor / shield < 150 pF/m

Insulation resistance

- R_{iso} > 100 GΩ x km
- U_{max} < 24 V
- I_{max} < 100 mA

Test voltages

- Insulated conductor / inner shield 500 V
- Insulated conductor / insulated conductor 1000 V
- Insulated conductor / outer shield 1000 V

Twisting of the insulated conductors

- At least 10 twists per meter, important for screening magnetic fields.

4.4 Preparing the signal and field current cables (except TIDALFLUX)

INFORMATION!
Assembly materials and tools are not part of the delivery. Use the assembly materials and tools in compliance with the applicable occupational health and safety directives.

The electrical connection of the outer shield is different for the various housing variants. Please observe the corresponding instructions.

4.4.1 Signal cable A (type DS 300), construction

- Signal cable A is a double-shielded cable for signal transmission between the measuring sensor and signal converter.
- Bending radius: ≥ 50 mm / 2"

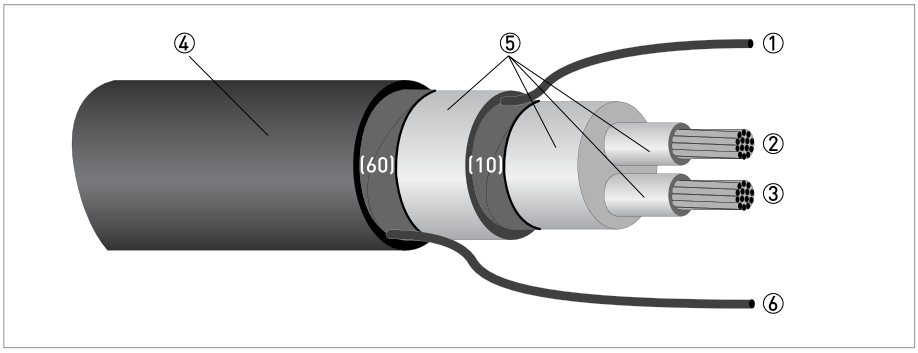

Figure 4-1: Construction of signal cable A

① Stranded drain wire (1) for the inner shield (10), 1.0 mm^2 Cu / AWG 17 (not insulated, bare)
② Insulated wire (2), 0.5 mm^2 Cu / AWG 20
③ Insulated wire (3), 0.5 mm^2 Cu / AWG 20
④ Outer sheath
⑤ Insulation layers
⑥ Stranded drain wire (6) for the outer shield (60)

4.4.2 Preparing signal cable A, connection to signal converter

Field housing

INFORMATION!
Assembly materials and tools are not part of the delivery. Use the assembly materials and tools in compliance with the applicable occupational health and safety directives.

- The outside shield (60) is connected in the field housing directly via the shield and a clip.
- Bending radius: ≥ 50 mm / 2"

Required materials:

- PVC insulation tubing, Ø2.5 mm / 0.1"
- Heat-shrinkable tubing
- Wire end ferrule to DIN 46 228: E 1.5-8 for the stranded drain wire (1)
- 2x wire end ferrules to DIN 46 228: E 0.5-8 for the insulated conductors (2, 3)

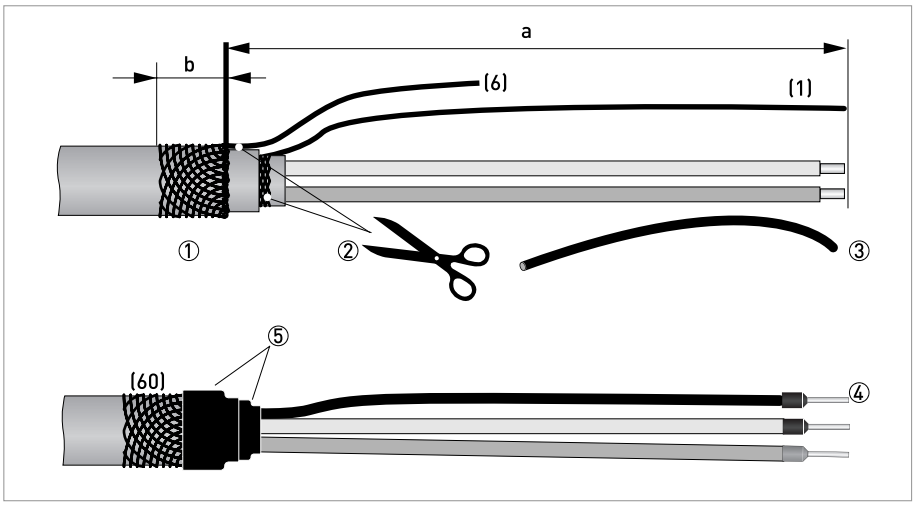

Figure 4-2: Signal cable A, preparation for field housing

a = 80 mm / 3.15"
b = 10 mm / 0.39"

① Strip the conductor to dimension a.
Trim the outer shield to dimension b and pull it over the outer sheath.
② Cut off the inner shield (10) and the stranded drain wire (6). Make sure not to damage the stranded drain wire (1).
③ Slide an insulating tube over the stranded drain wire (1).
④ Crimp the wire end ferrules onto the conductors (2, 3) and stranded drain wire.
⑤ Pull the heat-shrinkable tubing over the prepared signal cable.

Wall mounted housing

INFORMATION!
Assembly materials and tools are not part of the delivery. Use the assembly materials and tools in compliance with the applicable occupational health and safety directives.

- The connection of the outer shield (60) is carried out in the wall-mounted housing via the stranded drain wire (6).
- Bending radius: ≥ 50 mm / 2"

Required materials

- Push-on connector 6.3 mm / 0.25", insulation to DIN 46245 for conductor Ø = 0.5...1 mm^2 / AWG 20...17
- PVC insulation tubing, Ø2.5 mm / 0.1"
- Heat-shrinkable tubing
- Wire end ferrule to DIN 46 228: E 1.5-8 for the stranded drain wire (1)
- 2x wire end ferrules to DIN 46 228: E 0.5-8 for the insulated conductors (2, 3)

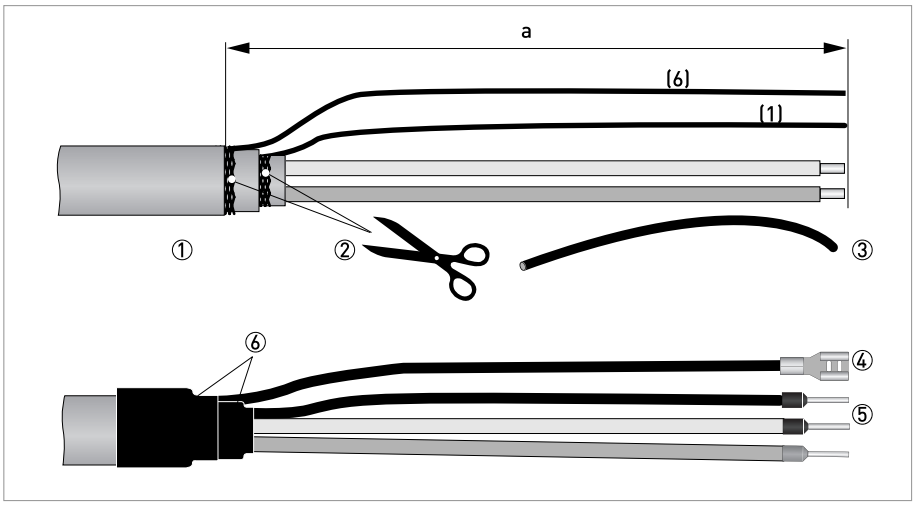

Figure 4-3: Signal cable A, preparation for wall-mounted housing

a = 80 mm / 3.15"

① Strip the conductor to dimension a.
② Cut off the inner shield (10) and the outer shield (60). Make sure not to damage the stranded drain wires (1) and (6).
③ Slide the insulation tubing over the stranded drain wires.
④ Crimp the push-on connector onto the stranded drain wire (6).
⑤ Crimp the wire end ferrules onto the conductors (2, 3) and stranded drain wire (1).
⑥ Pull the heat-shrinkable tubing over the prepared signal cable.

4.4.3 Length of signal cable A

INFORMATION!
For temperatures of the medium above 150° C / 300° F, a special signal cable and a ZD intermediate socket are necessary. These are available including the changed electrical connection diagrams.

Measuring sensor	Nominal size		Min. electrical conductivity [µS/cm]	Curve for signal cable A
	DN [mm]	[inch]		
OPTIFLUX 1000 F	10...150	3/8...6	5	A1
OPTIFLUX 2000 F	25...150	1...6	20	A1
	200...2000	8...80	20	A2
OPTIFLUX 4000 F	2.5...150	1/10...6	1	A1
	200...2000	8...80	1	A2
OPTIFLUX 5000 F	2.5...100	1/10...4	1	A1
	150...250	6...10	1	A2
OPTIFLUX 6000 F	2.5...150	1/10...6	1	A1
WATERFLUX 3000 F	25...600	1...24	20	A1

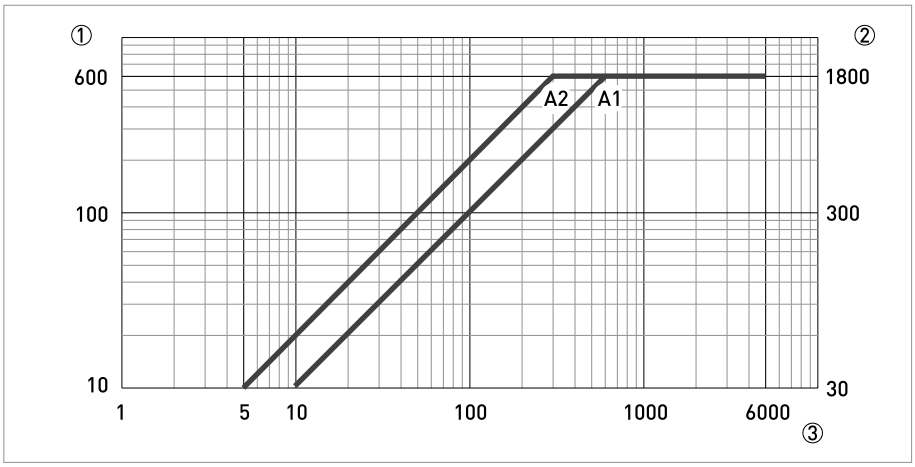

Figure 4-4: Maximum length of signal cable A

① Maximum length of signal cable A between the measuring sensor and signal converter [m]
② Maximum length of signal cable A between the measuring sensor and signal converter [ft]
③ Electrical conductivity of the medium being measured [µS/cm]

4.4.4 Signal cable B (type BTS 300), construction

- Signal cable B is a triple-shielded cable for signal transmission between the measuring sensor and signal converter.
- Bending radius: ≥ 50 mm / 2"

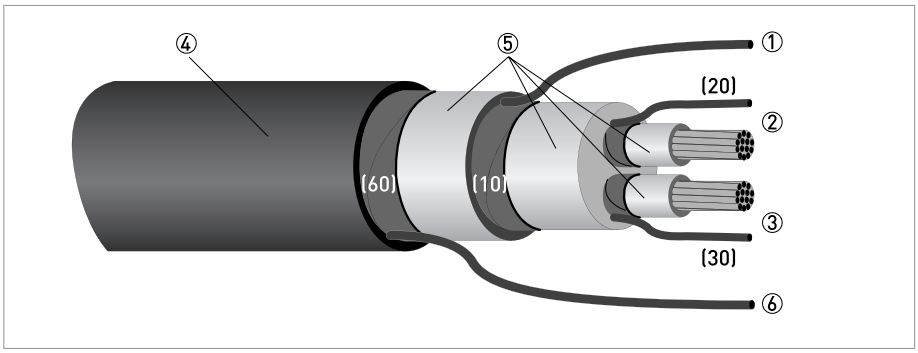

Figure 4-5: Construction of signal cable B

① Stranded drain wire for the inner shield (10), 1.0 mm^2 Cu / AWG 17 (not insulated, bare)
② Insulated wire (2), 0.5 mm^2 Cu / AWG 20 with stranded drain wire (20) of shield
③ Insulated wire (3), 0.5 mm^2 Cu / AWG 20 with stranded drain wire (30) of shield
④ Outer sheath
⑤ Insulation layers
⑥ Stranded drain wire (6) for the outer shield (60), 0.5 mm^2 Cu / AWG 20 (not insulated, bare)

4.4.5 Preparing signal cable B, connection to signal converter

Field housing

INFORMATION!
Assembly materials and tools are not part of the delivery. Use the assembly materials and tools in compliance with the applicable occupational health and safety directives.

- The outside shield (60) is connected in the field housing directly via the shield and a clip.
- Bending radius: ≥ 50 mm / 2"

Required materials

- PVC insulation tubing, Ø2.0...2.5 mm / 0.08...0.1"
- Heat-shrinkable tubing
- Wire end ferrule to DIN 46 228: E 1.5-8 for the stranded drain wire (1)
- 4 wire end ferrules to DIN 46 228: E 0.5-8 for the insulated conductors 2 and 3 and the stranded drain wires (20, 30)

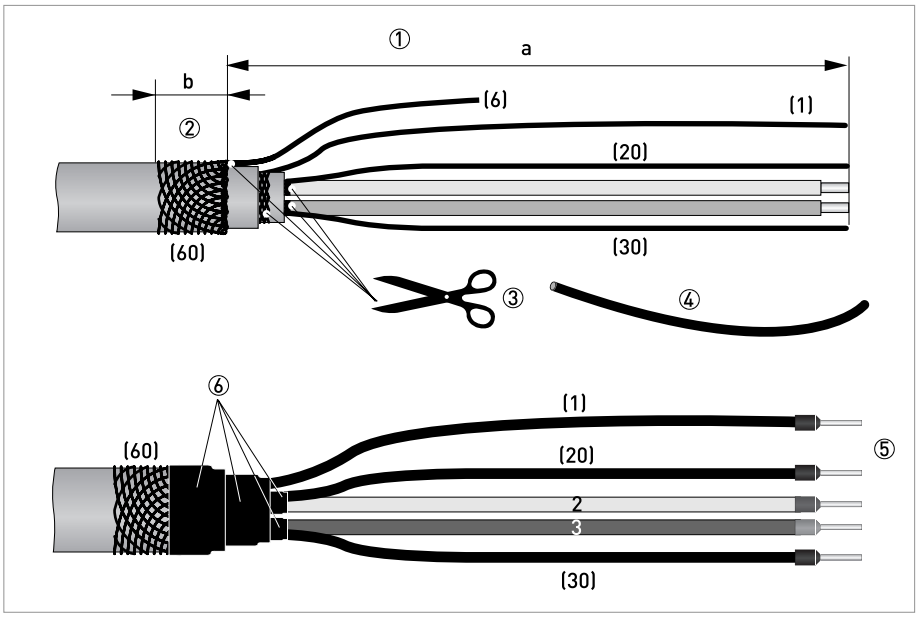

Figure 4-6: Signal cable B, preparation for field housing

a = 80 mm / 3.15"
b = 10 mm / 0.39"

① Strip the conductor to dimension a.
② Trim the outer shield to dimension b and pull it over the outer sheath.
③ Cut off the inner shield (10), the stranded drain wire (6) and the shields of the insulated conductors. Make sure not to damage the stranded drain wires (1, 20, 30).
④ Slide the insulation tubing over the stranded drain wires (1, 20, 30).
⑤ Crimp the wire end ferrules onto the conductors and stranded drain wires.
⑥ Pull the heat-shrinkable tubing over the prepared signal cable.

Wall-mounted housing

INFORMATION!
Assembly materials and tools are not part of the delivery. Use the assembly materials and tools in compliance with the applicable occupational health and safety directives.

- The connection of the outer shield (60) is carried out in the wall-mounted housing via the stranded drain wire (6).
- Bending radius: ≥ 50 mm / 2"

Required materials:

- Push-on connector 6.3 mm / 0.25", insulation to DIN 46245 for conductor Ø = 0.5...1 mm^2 / AWG 20...17
- PVC insulation tubing, Ø2.5 mm / 0.1"
- Heat-shrinkable tubing
- Wire end ferrule to DIN 46 228: E 1.5-8 for the stranded drain wire (1)
- 4 wire end ferrules to DIN 46 228: E 0.5-8 for insulated conductors 2 and 3 and the stranded drain wires (20, 30)

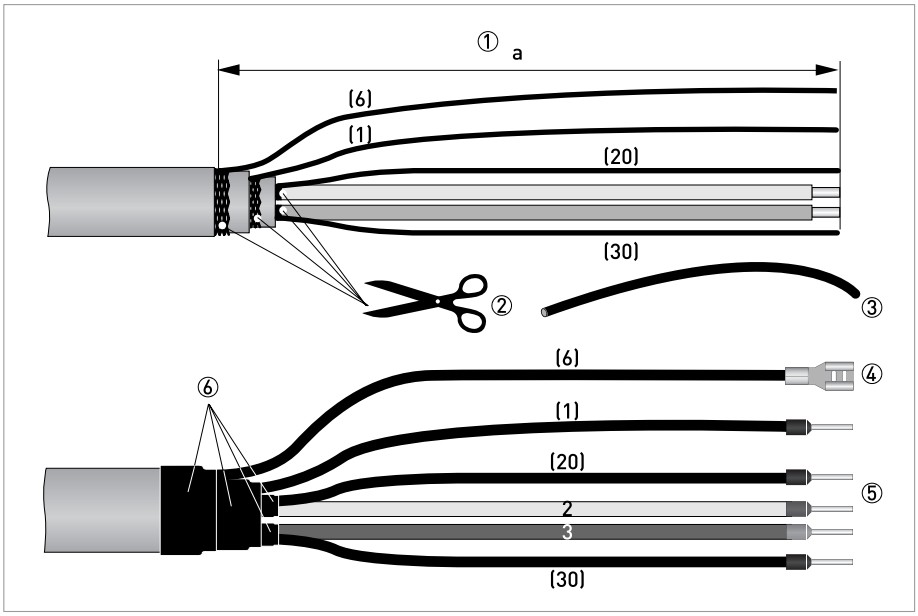

Figure 4-7: Signal cable B, preparation for wall-mounted housing

a = 80 mm / 3.15"

① Strip the conductor to dimension a.
② Cut off the inner shield (10), the outer shield (60) and the shields for the conductor (2, 3). Make sure not to damage the stranded drain wires (1, 6, 20, 30).
③ Slide the insulation tubing over the stranded drain wires.
④ Crimp the push-on connector onto the stranded drain wire (6).
⑤ Crimp the wire end ferrules onto the conductors and stranded drain wires (1, 20, 30).
⑥ Pull the heat-shrinkable tubing over the prepared signal cable.

4.4.6 Length of signal cable B

INFORMATION!
For temperatures of the medium above 150° C / 300° F, a special signal cable and a ZD intermediate socket are necessary. These are available including the changed electrical connection diagrams.

Measuring sensor	Nominal size		Min. electrical conductivity [µS/cm]	Curve for signal cable B
	DN [mm]	[inch]		
OPTIFLUX 1000 F	10...150	3/8...6	5	B2
OPTIFLUX 2000 F	25...150	1...6	20	B3
	200...2000	8...80	20	B4
OPTIFLUX 4000 F	2.5...6	1/10...1/6	10	B1
	10...150	3/8...6	1	B3
	200...2000	8...80	1	B4
OPTIFLUX 5000 F	2.5	1/10	10	B1
	4...15	1/6...1/2	5	B2
	25...100	1...4	1	B3
	150...250	6...10	1	B4
OPTIFLUX 6000 F	2.5...15	1/10...1/2	10	B1
	25...150	1...6	1	B3
WATERFLUX 3000 F	25...600	1...24	20	B1

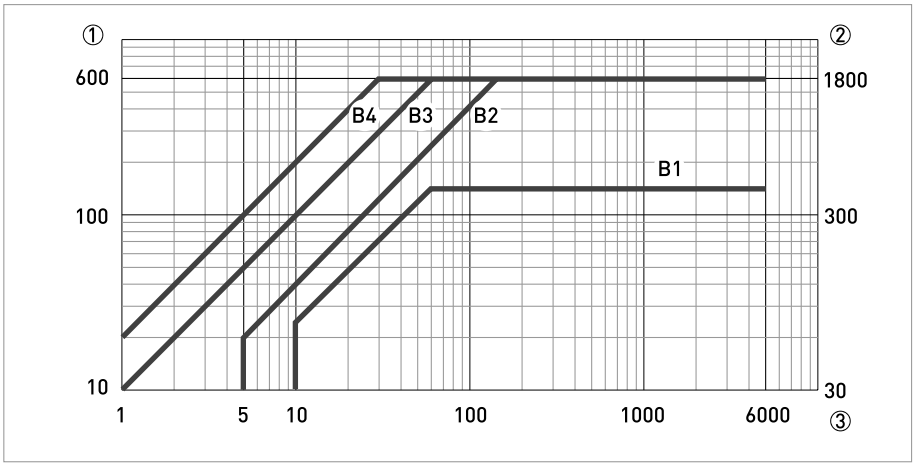

Figure 4-8: Maximum length of signal cable B

① Maximum length of signal cable B between the measuring sensor and signal converter [m]
② Maximum length of signal cable B between the measuring sensor and signal converter [ft]
③ Electrical conductivity of the medium being measured [µS/cm]

4.4.7 Preparing field current cable C, connection to signal converter

DANGER!
*A non-shielded three-wire copper cable is sufficient for the field current cable. If you nevertheless use shielded cables, the shield must **NOT** be connected in the housing of the signal converter.*

INFORMATION!
Assembly materials and tools are not part of the delivery. Use the assembly materials and tools in compliance with the applicable occupational health and safety directives.

- Field current cable C is not part of the scope of delivery.
- Bending radius: ≥ 50 mm / 2"

Required materials:

- Shielded 3-wire copper cable with suitable heat-shrinkable tubing
- DIN 46 228 wire end ferrules: size according to the cable being used

Length and cross-section of field current cable C

Length		Cross-section A_F (Cu)	
[m]	[ft]	[mm²]	[AWG]
0...150	0...492	3 x 0.75 Cu ①	3 x 18
150...300	492...984	3 x 1.50 Cu ①	3 x 14
300...600	984...1968	3 x 2.50 Cu ①	3 x 12

① Cu = copper cross-section

In the wall-mounted housing version the connection terminals are designed for the following cable cross-sections:

- Flexible cable ≤ 1.5 mm^2 / AWG 14
- Solid cable ≤ 2.5 mm^2 / AWG 12

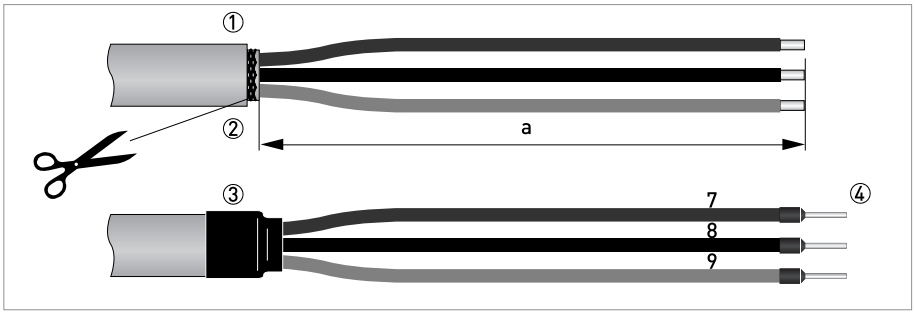

Figure 4-9: Field current cable C, preparation for the signal converter

a = 80 mm / 3.15"

① Strip the conductor to dimension a.
② Remove any shield that is present.
③ Pull a shrinkable tube over the prepared cable.
④ Crimp the wire end ferrules onto the conductors 7, 8 and 9.

4.4.8 Preparing signal cable A, connection to measuring sensor

INFORMATION!
Assembly materials and tools are not part of the delivery. Use the assembly materials and tools in compliance with the applicable occupational health and safety directives.

- The outer shield (60) is connected in the terminal compartment of the measuring sensor directly via the shield and a clip.
- Bending radius: ≥ 50 mm / 2"

Required materials

- PVC insulating tube, Ø2.0...2.5 mm / 0.08...0.1"
- Heat-shrinkable tubing
- Wire end ferrule to DIN 46 228: E 1.5-8 for the stranded drain wire (1)
- 2 wire end ferrules to DIN 46 228: E 0.5-8 for the insulated conductors (2, 3)

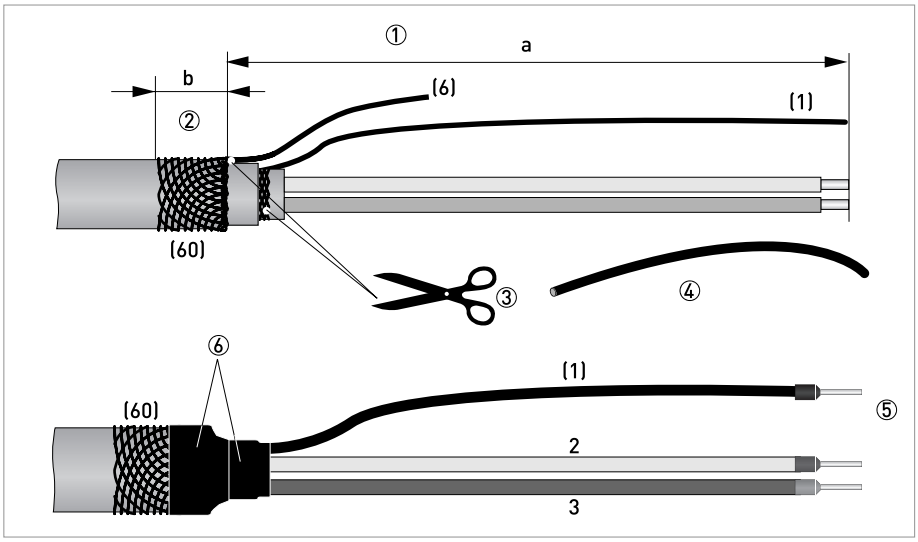

Figure 4-10: Preparing signal cable A, connection to measuring sensor

a = 50 mm / 2"
b = 10 mm / 0.39"

① Strip the conductor to dimension a.
② Trim the outer shield (60) to dimension b and pull it over the outer sheath.
③ Remove the stranded drain wire (6) of the outer shield and the inner shield (10). Make sure not to damage the stranded drain wire (1) of the inner shield.
④ Slide an insulating tube over the stranded drain wire (1).
⑤ Crimp the wire end ferrules onto conductors 2 and 3 and the stranded drain wire (1).
⑥ Pull the heat-shrinkable tubing over the prepared signal cable.

4.4.9 Preparing signal cable B, connection to measuring sensor

INFORMATION!
Assembly materials and tools are not part of the delivery. Use the assembly materials and tools in compliance with the applicable occupational health and safety directives.

- The outer shield (60) is connected in the terminal compartment of the measuring sensor directly via the shield and a clip.
- Bending radius: ≥ 50 mm / 2"

Required materials

- PVC insulation tubing, Ø2.0...2.5 mm / 0.08...0.1"
- Heat-shrinkable tubing
- Wire end ferrule to DIN 46 228: E 1.5-8 for the stranded drain wire (1)
- 2x wire end ferrules to DIN 46 228: E 0.5-8 for the insulated conductors (2, 3)

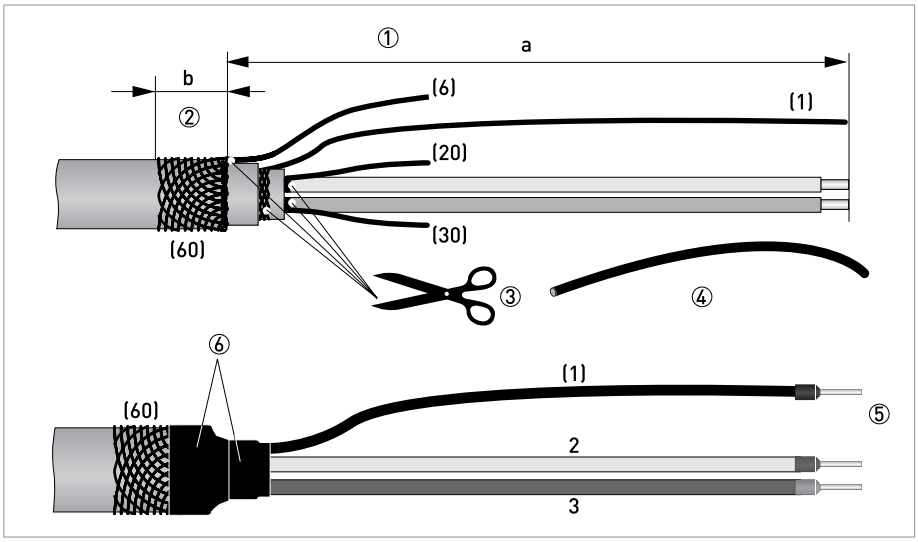

Figure 4-11: Preparing signal cable B, connection to measuring sensor

a = 50 mm / 2"
b = 10 mm / 0.39"

① Strip the conductor to dimension a.
② Trim the outer shield (60) to dimension b and pull it over the outer sheath.
③ Remove the stranded drain wire (6) of the outer shield and the shields and stranded drain wires of the insulated conductors (2, 3). Remove the inner shield (10). Be sure not to damage the stranded drain wire (1).
④ Slide an insulating tube over the stranded drain wire (1).
⑤ Crimp the wire end ferrules onto conductors 2 and 3 and the stranded drain wire (1).
⑥ Pull the heat-shrinkable tubing over the prepared signal cable.

4.4.10 Preparing field current cable C, connection to measuring sensor

INFORMATION!
Assembly materials and tools are not part of the delivery. Use the assembly materials and tools in compliance with the applicable occupational health and safety directives.

- The field current cable is not included in delivery.
- The shield for field current cable C can be connected to the measuring sensor.
- Bending radius: ≥ 50 mm / 2"

Required materials

- Heat-shrinkable tubing
- 3 wire end ferrules to DIN 46 228: size according to the cable being used

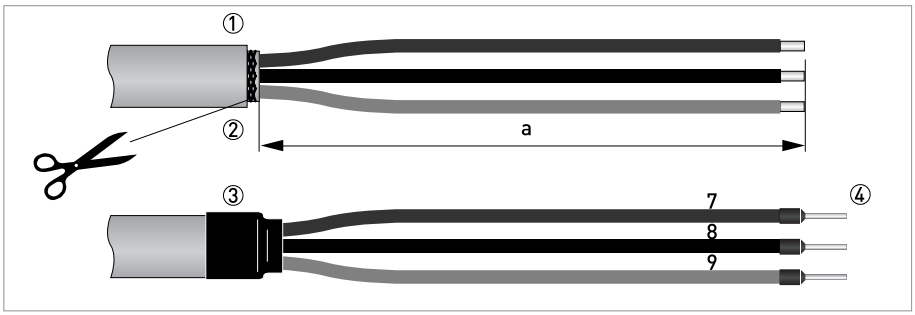

Figure 4-12: Field current cable C, preparation for the measuring sensor
a = 50 mm / 2"

① Strip the conductor to dimension a.
② Remove any shield that is present.
③ Pull a shrinkable tube over the prepared cable.
④ Crimp the wire end ferrules onto the conductors 7, 8 and 9.

4.5 Connecting the signal and field current cables (except TIDALFLUX)

DANGER!
Cables may only be connected when the power is switched off.

DANGER!
The device must be grounded in accordance with regulations in order to protect personnel against electric shocks.

DANGER!
For devices used in hazardous areas, additional safety notes apply; please refer to the Ex documentation.

WARNING!
Observe without fail the local occupational health and safety regulations. Any work done on the electrical components of the measuring device may only be carried out by properly trained specialists.

4.5.1 Connecting the signal and field current cables, field housing

- The outer shield of signal cable A and/or B is connected electrically with the housing via the clip of the strain relief.
- If a shielded field current cable is used, the shield must **NOT** be connected in the housing of the signal converter.
- Bending radius: ≥ 50 mm / 2"

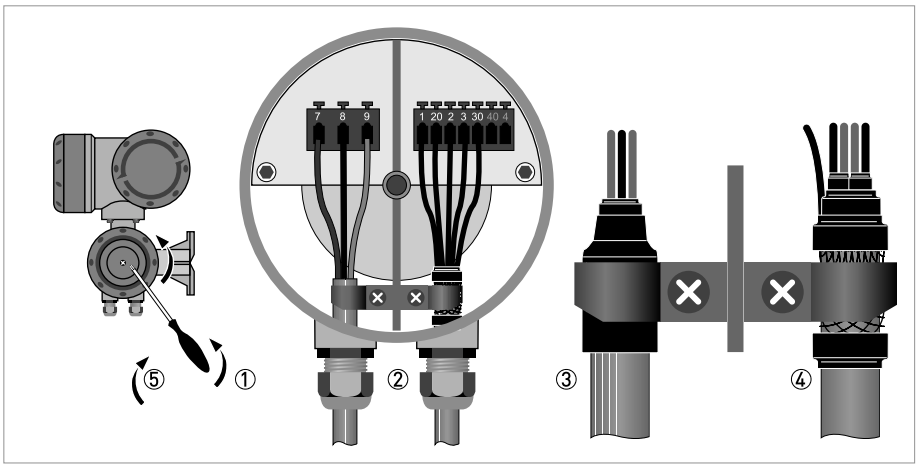

Figure 4-13: Electrical connection of the signal and field current cables, field housing

① Remove the locking screw and open the housing cover.
② Pass the prepared signal and field current cables through the cable entries and connect the corresponding stranded drain wires and conductors.
③ Secure the field current cable using the clip. Any shield that is present must **NOT** be connected.
④ Secure the signal cable using the clip. This also connects the outer shield to the housing.
⑤ Close the housing cover and secure it with the locking screw.

INFORMATION!
Each time a housing cover is opened, the thread should be cleaned and greased. Use only resin-free and acid-free grease.
Ensure that the housing gasket is properly fitted, clean and undamaged.

4.5.2 Connecting the signal and field current cables, wall-mounted housing

- The outer shield of signal cable A and/or B is connected via the stranded drain wire.
- If a shielded field current cable is used, the shield must **NOT** be connected in the housing of the signal converter.
- Bending radius: ≥ 50 mm / 2"

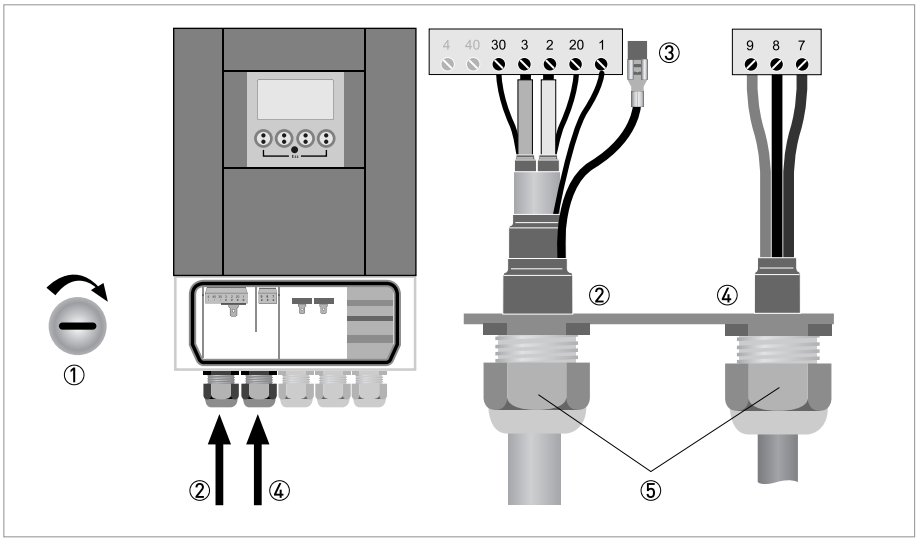

Figure 4-14: Electrical connection of the signal and field current cables, wall-mounted housing

① Open the housing cover.
② Pass the prepared signal cable through the cable entry and connect the corresponding stranded drain wires and conductors.
③ Connect the stranded drain wire of the outer shield.
④ Pass the prepared field current cable through the cable entry and connect the corresponding conductor.
Any shield that is present must **NOT** be connected.
⑤ Tighten the screw connections of the cable entry and close the housing cover.

INFORMATION!
Ensure that the housing gasket is properly fitted, clean and undamaged.

4.5.3 Connecting the signal and field current cables, 19" rack-mounted housing (28 TE)

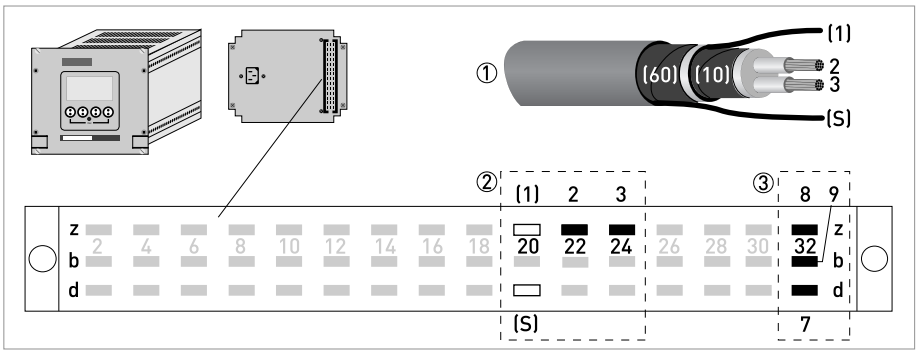

Figure 4-15: Connection signal cable A and field current cable

① Signal cable A
② Shield and insulated wires 2 and 3
③ Field current cable

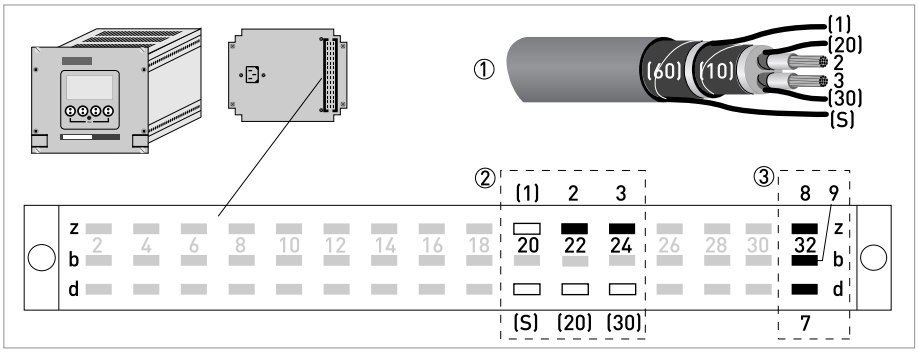

Figure 4-16: Connection signal cable B and field current cable

① Signal cable B
② Shield and insulated wires 2 and 3
③ Field current cable

4.5.4 Connecting the signal and field current cables, 19" rack-mounted housing (21 TE)

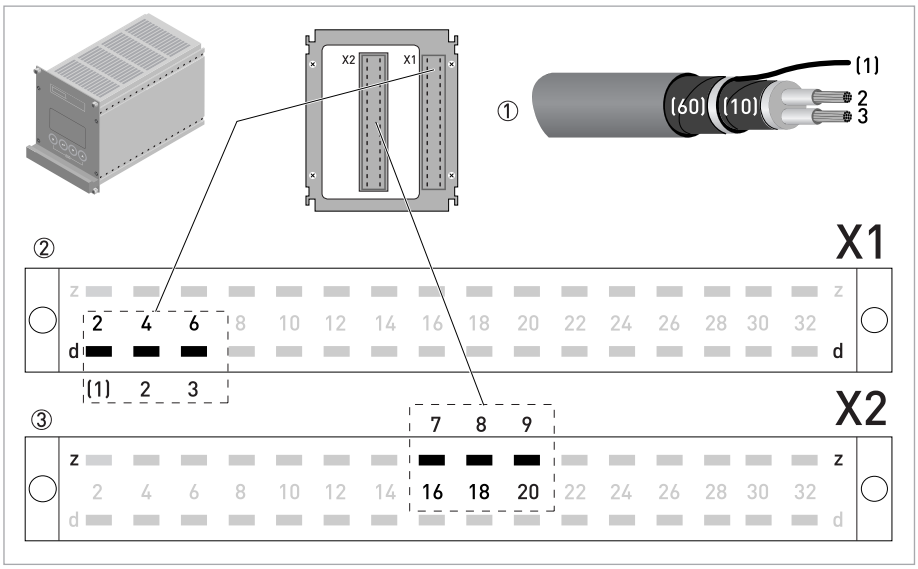

Figure 4-17: Connection signal cable A and field current cable

① Signal cable A
② Shield and insulated wires 2 and 3
③ Field current cable

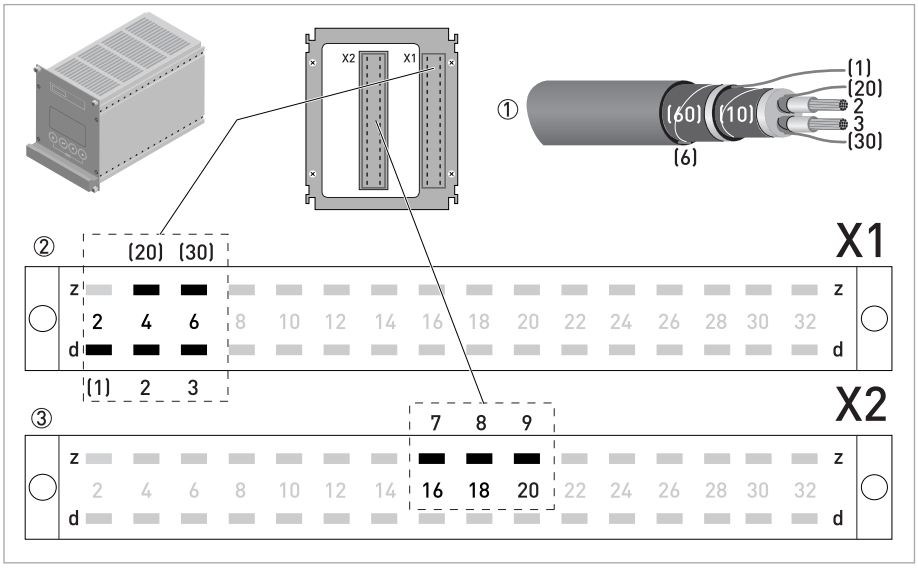

Figure 4-18: Connection signal cable B and field current cable

① Signal cable B
② Shield and insulated wires 2 and 3
③ Field current cable

4.5.5 Connection diagram for measuring sensor, field housing

DANGER!
The device must be grounded in accordance with regulations in order to protect personnel against electric shocks.

- If a shielded field current cable is used, the shield must **NOT** be connected in the housing of the signal converter.
- The outer shield of signal cable A or B in the signal converter housing is connected via the strain relief terminal.
- Bending radius of signal and field current cable: ≥ 50 mm / 2"
- The following illustration is schematic. The positions of the electrical connection terminals may vary depending on the housing version.

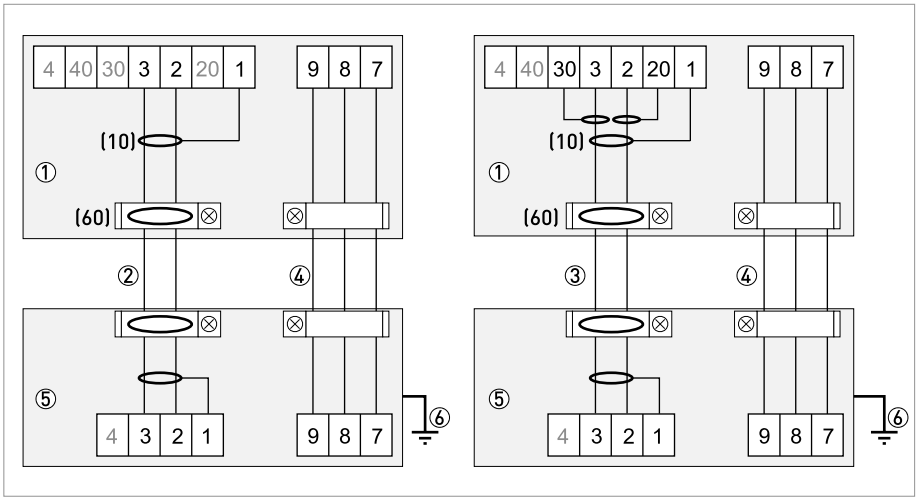

Figure 4-19: Connection diagram for measuring sensor, field housing

① Electrical terminal compartment in housing of the signal converter for signal and field current cable.
② Signal cable A
③ Signal cable B
④ Field current cable C
⑤ Connection box of measuring sensor
⑥ Functional ground FE

4.5.6 Connection diagram for measuring sensor, wall-mounted housing

DANGER!
The device must be grounded in accordance with regulations in order to protect personnel against electric shocks.

- If a shielded field current cable is used, the shield must **NOT** be connected in the housing of the signal converter.
- The outer shield of the signal cable is connected in the signal converter housing via the stranded drain wire.
- Bending radius of signal and field current cable: ≥ 50 mm / 2"
- The following illustration is schematic. The positions of the electrical connection terminals may vary depending on the housing version.

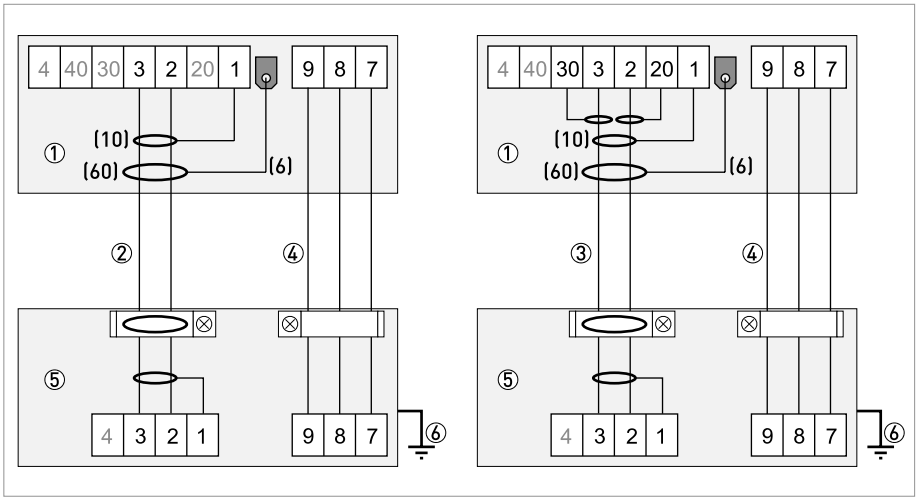

Figure 4-20: Connection diagram for measuring sensor, wall-mounted housing

① Electrical terminal compartment in housing of the signal converter for signal and field current cable.
② Signal cable A
③ Signal cable B
④ Field current cable C
⑤ Connection box of measuring sensor
⑥ Functional ground FE

4.5.7 Connection diagram for measuring sensor, 19" rack-mounted housing (28 TE)

DANGER!
The device must be grounded in accordance with regulations in order to protect personnel against electric shocks.

- If a shielded field current cable is used, the shield must **NOT** be connected in the housing of the signal converter.
- The outer shield of the signal cable is connected in the signal converter housing via the stranded drain wire.
- Bending radius of signal and field current cable: ≥ 50 mm / 2"
- The following illustration is schematic. The positions of the electrical connection terminals may vary depending on the housing version.

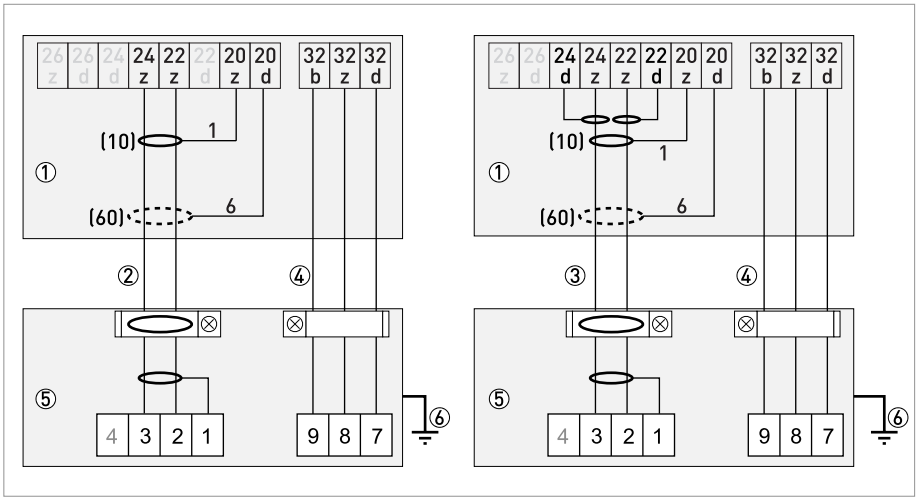

Figure 4-21: Connection diagram for measuring sensor, 19" rack-mounted housing (28 TE)

① Electrical terminal compartment in housing of the signal converter for signal and field current cable.
② Signal cable A
③ Signal cable B
④ Field current cable C
⑤ Connection box of measuring sensor
⑥ Functional ground FE

4.5.8 Connection diagram for measuring sensor, 19" rack-mounted housing (21 TE)

DANGER!
The device must be grounded in accordance with regulations in order to protect personnel against electric shocks.

- If a shielded field current cable is used, the shield must **NOT** be connected in the housing of the signal converter.
- The outer shield of the signal cable is connected in the signal converter housing via the stranded drain wire.
- Bending radius of signal and field current cable: ≥ 50 mm / 2"
- The following illustration is schematic. The positions of the electrical connection terminals may vary depending on the housing version.

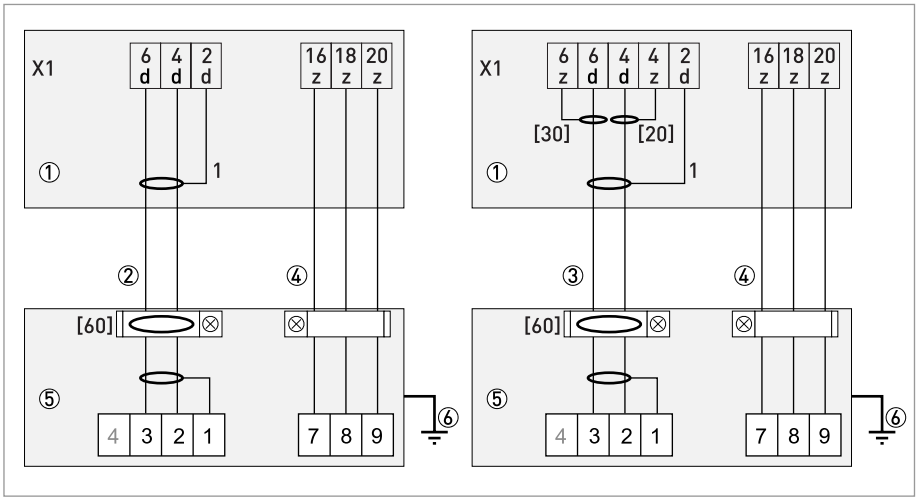

Figure 4-22: Connection diagram for measuring sensor, 19" rack-mounted housing (21 TE)

① Electrical terminal compartment in housing of the signal converter for signal and field current cable.
② Signal cable A
③ Signal cable B
④ Field current cable C
⑤ Connection box of measuring sensor
⑥ Functional ground FE

4.6 Preparing and connecting the signal and field current cables (only TIDALFLUX)

DANGER!
Cables may only be connected when the power is switched off.

DANGER!
The device must be grounded in accordance with regulations in order to protect personnel against electric shocks.

DANGER!
For devices used in hazardous areas, additional safety notes apply; please refer to the Ex documentation.

WARNING!
Observe without fail the local occupational health and safety regulations. Any work done on the electrical components of the measuring device may only be carried out by properly trained specialists.

4.6.1 Cable lengths

CAUTION!
The maximum allowed distance between the flow sensor and the converter is determined by the shortest cable length.

Interface cable: maximum length is 600 m / 1968 ft.

Type B (BTS) signal cable: maximum length is 600 m / 1968 ft.

Type A (DS) signal cable: maximum length depends on the conductivity of the fluid:

Electrical conductivity	Maximum length	
[µS/cm]	[m]	[ft]
50	120	394
100	200	656
200	400	1312
≥400	600	1968

Field current cable: The cross section of the cable determines the maximum length:

Cross section		Maximum length	
[mm^2]	[AWG]	[m]	[ft]
2 x 0.75	2 x 18	150	492
2 x 1.5	2 x 14	300	984
2 x 2.5	2 x 12	600	1968

4.6.2 Signal cable A (type DS 300), construction

- Signal cable A is a double-shielded cable for signal transmission between the measuring sensor and signal converter.
- Bending radius: ≥ 50 mm / 2"

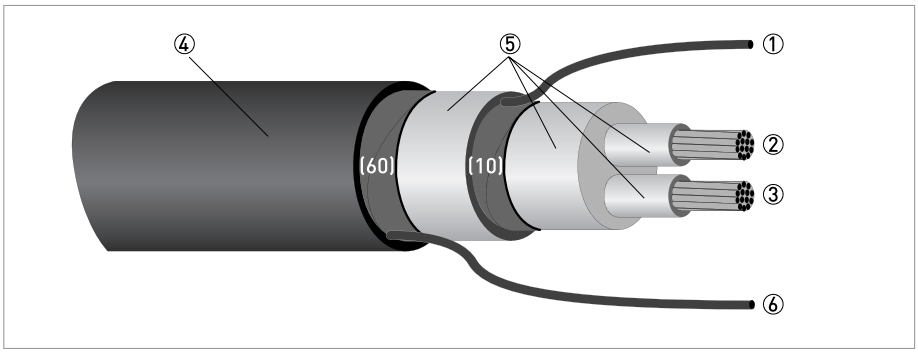

Figure 4-23: Construction of signal cable A

① Stranded drain wire (1) for the inner shield (10), 1.0 mm^2 Cu / AWG 17 (not insulated, bare)
② Insulated wire (2), 0.5 mm^2 Cu / AWG 20
③ Insulated wire (3), 0.5 mm^2 Cu / AWG 20
④ Outer sheath
⑤ Insulation layers
⑥ Stranded drain wire (6) for the outer shield (60)

4.6.3 Preparing signal cable A, connection to signal converter

Field housing

INFORMATION!
Assembly materials and tools are not part of the delivery. Use the assembly materials and tools in compliance with the applicable occupational health and safety directives.

- The outside shield (60) is connected in the field housing directly via the shield and a clip.
- Bending radius: ≥ 50 mm / 2"

Required materials:

- PVC insulating tube, Ø2.5 mm / 0.1"
- Heat-shrinkable tubing
- Wire end ferrule to DIN 46 228: E 1.5-8 for the stranded drain wire (1)
- 2 wire end ferrules to DIN 46 228: E 0.5-8 for the insulated conductors (2, 3)

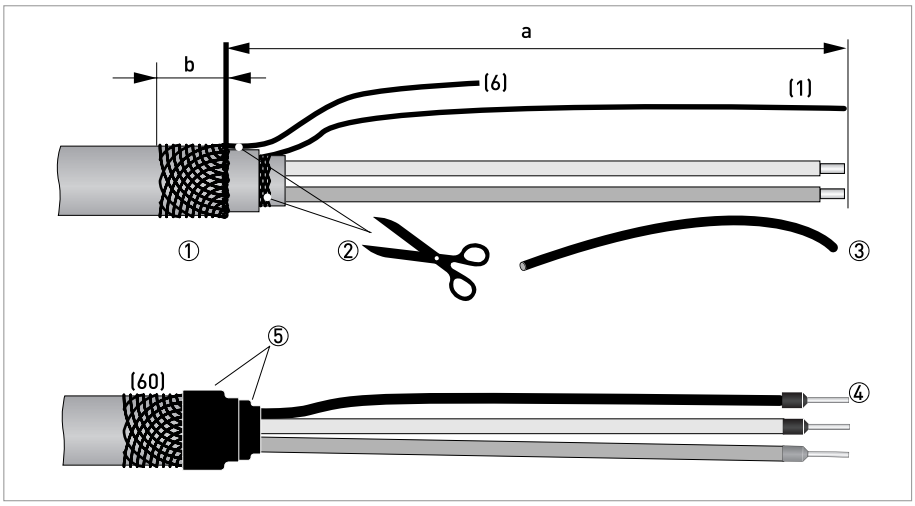

Figure 4-24: Signal cable A, preparation for field housing

a = 80 mm / 3.15"
b = 10 mm / 0.39"

① Strip the conductor to dimension a.
Trim the outer shield to dimension b and pull it over the outer sheath.
② Cut off the inner shield (10) and the stranded drain wire (6). Be sure not to damage the stranded drain wire (1).
③ Slide an insulating tube over the stranded drain wire (1).
④ Crimp the wire end ferrules onto the conductors (2, 3) and stranded drain wire.
⑤ Pull the heat-shrinkable tubing over the prepared signal cable.

4.6.4 Prepare signal cable A, connect to measuring sensor

INFORMATION!
Assembly materials and tools are not part of the delivery. Use the assembly materials and tools in compliance with the applicable occupational health and safety directives.

Required materials

- PVC insulation tubing, Ø2.0...2.5 mm / 0.08...0.1"
- Heat-shrinkable tubing
- Wire end ferrule to DIN 46 228: E 1.5-8 for the twisted stranded drain wires (1) and (6)
- 2x wire end ferrules to DIN 46 228: E 0.5-8 for the insulated conductors (2, 3)

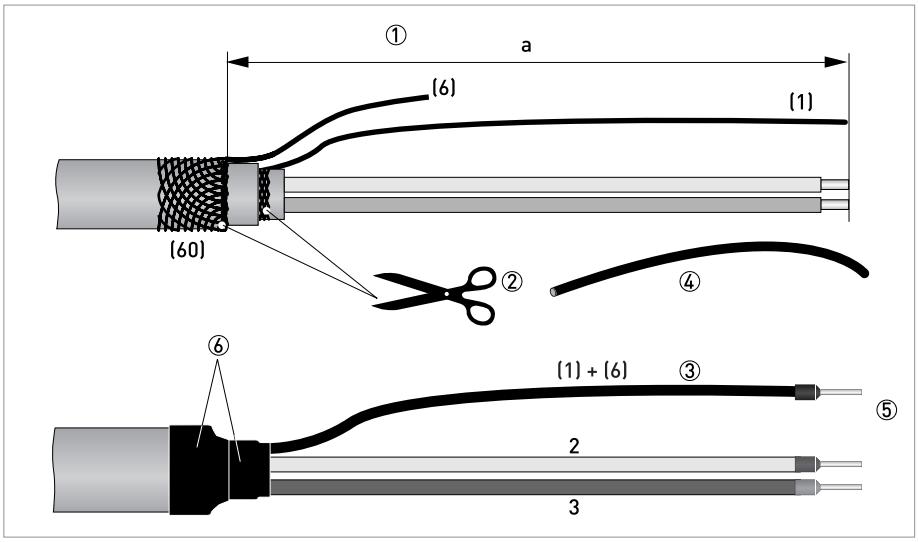

Figure 4-25: Prepare signal cable A, connect to measuring sensor

a = 50 mm / 2"

① Strip the conductor to dimension a.
② Cut the outer shields (60) and (10). Make sure not to damage the stranded drain wires (1) and (6).
③ Twist the stranded drain wires (6) of the outer shield and the drain wire (1) of the inner shield (10).
④ Slide an insulating tube over the stranded drain wires (1) and (6).
⑤ Crimp the wire end ferrules onto conductors 2 and 3 and the stranded drain wires (1) and (6).
⑥ Pull the heat-shrinkable tubing over the prepared signal cable.

4.6.5 Signal cable B (type BTS 300), construction

- Signal cable B is a triple-shielded cable for signal transmission between the measuring sensor and signal converter.
- Bending radius: ≥ 50 mm / 2"

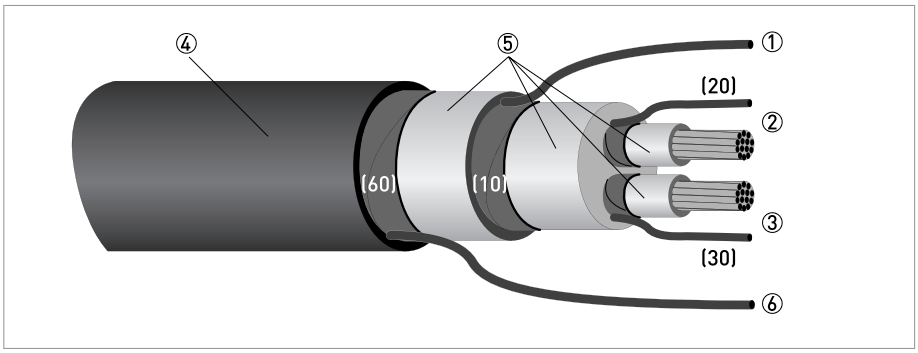

Figure 4-26: Construction of signal cable B

① Stranded drain wire for the inner shield (10), 1.0 mm^2 Cu / AWG 17 (not insulated, bare)
② Insulated wire (2), 0.5 mm^2 Cu / AWG 20 with stranded drain wire (20) of shield
③ Insulated wire (3), 0.5 mm^2 Cu / AWG 20 with stranded drain wire (30) of shield
④ Outer sheath
⑤ Insulation layers
⑥ Stranded drain wire (6) for the outer shield (60), 0.5 mm^2 Cu / AWG 20 (not insulated, bare)

4.6.6 Preparing signal cable B, connection to signal converter

Field housing

INFORMATION!
Assembly materials and tools are not part of the delivery. Use the assembly materials and tools in compliance with the applicable occupational health and safety directives.

- The outside shield (60) is connected in the field housing directly via the shield and a clip.
- Bending radius: ≥ 50 mm / 2"

Required materials

- PVC insulating tube, Ø2.0...2.5 mm / 0.08...0.1"
- Heat-shrinkable tubing
- Wire end ferrule to DIN 46 228: E 1.5-8 for the stranded drain wire (1)
- 4 wire end ferrules to DIN 46 228: E 0.5-8 for the insulated conductors 2 and 3 and the stranded drain wires (20, 30)

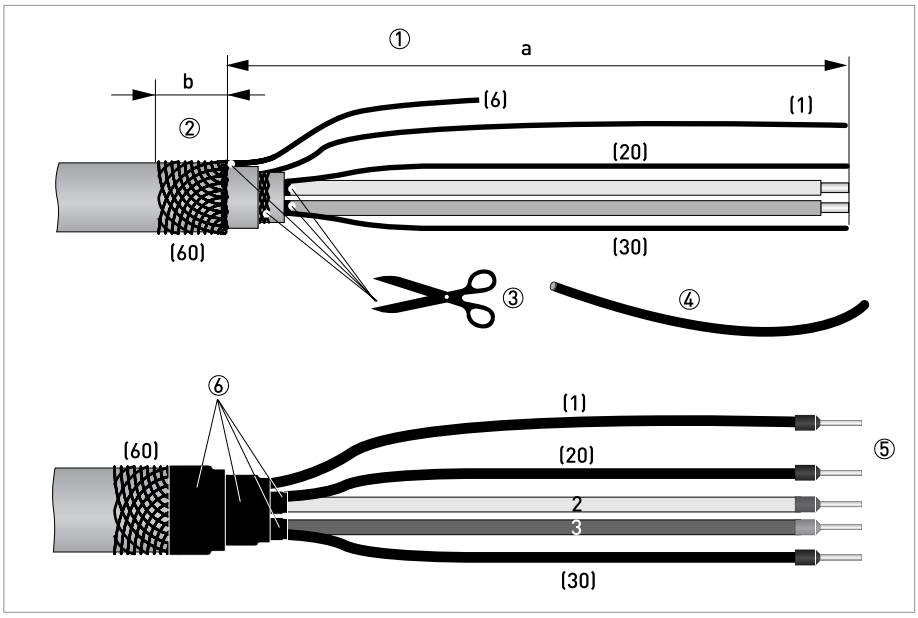

Figure 4-27: Signal cable B, preparation for field housing

a = 80 mm / 3.15"
b = 10 mm / 0.39"

① Strip the conductor to dimension a.
② Trim the outer shield to dimension b and pull it over the outer sheath.
③ Cut off the inner shield (10), the stranded drain wire (6) and the shields of the insulated conductors. Make sure not to damage the stranded drain wires (1, 20, 30).
④ Slide the insulation tubing over the stranded drain wires (1, 20, 30).
⑤ Crimp the wire end ferrules onto the conductors and stranded drain wires.
⑥ Pull the heat-shrinkable tubing over the prepared signal cable.

4.6.7 Preparing signal cable B, connection to measuring sensor

INFORMATION!
Assembly materials and tools are not part of the delivery. Use the assembly materials and tools in compliance with the applicable occupational health and safety directives.

Required materials

- PVC insulation tubing, Ø2.0...2.5 mm / 0.08...0.1"
- Heat-shrinkable tubing
- Wire end ferrule to DIN 46 228: E 1.5-8 for the twisted stranded drain wires (1) and (6)
- 2x wire end ferrules to DIN 46 228: E 0.5-8 for the insulated conductors (2, 3)

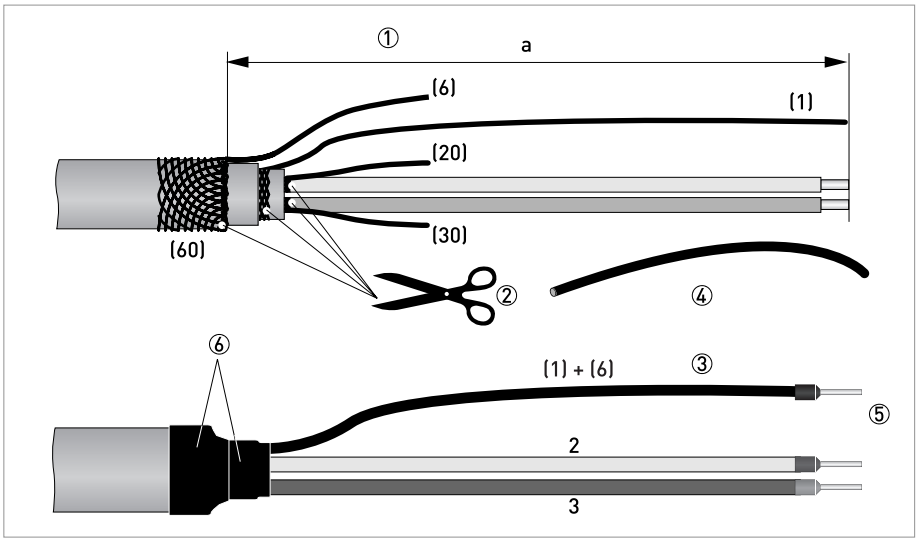

Figure 4-28: Preparing signal cable B, connection to measuring sensor

a = 50 mm / 2"

① Strip the conductor to dimension a.
② Cut the outer shields (60), (10), the shields around the insulated conductors (2, 3) and the stranded drain wires (20, 30) . Make sure not to damage the stranded drain wires (1) and (6).
③ Twist the stranded drain wires (6) of the outer shield and the drain wire (1) of the inner shield (10).
④ Slide an insulating tube over the stranded drain wires (1) and (6).
⑤ Crimp the wire end ferrules onto conductors 2 and 3 and the stranded drain wires (1) en (6).
⑥ Pull the heat-shrinkable tubing over the prepared signal cable.

4.6.8 Preparing field current cable C, connection to signal converter

DANGER!
*A shielded two-wire copper cable is used as the field current cable. The shielding **MUST** be connected in the housing of the measuring sensor and signal converter.*

INFORMATION!
Assembly materials and tools are not part of the delivery. Use the assembly materials and tools in compliance with the applicable occupational health and safety directives.

- Field current cable C is not part of the scope of delivery.
- Bending radius: ≥ 50 mm / 2"

Required materials:

- Shielded 2-wire copper cable, with fitted heat-shrinkable tubing
- DIN 46 228 wire end ferrules: size according to the cable being used

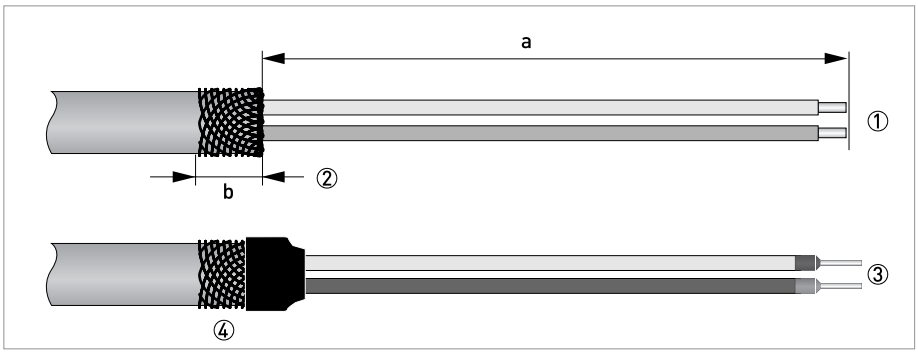

Figure 4-29: Preparation of field current cable C

a = 80 mm / 3.15"
b = 10 mm / 0.4"

① Strip the conductor to dimension a.
② Trim the outer shield to dimension b and pull it over the outer sheath.
③ Crimp wire end ferrules onto both conductors.
④ Pull a shrinkable tube over the prepared cable.

4.6.9 Preparing field current cable C, connection to measuring sensor

INFORMATION!
Assembly materials and tools are not part of the delivery. Use the assembly materials and tools in compliance with the applicable occupational health and safety directives.

- The field current cable is not part of the scope of delivery.
- The shield is connected in the terminal compartment of the converter directly via the shield and a clip.
- The shield is connected in the sensor via the special cable gland.
- Bending radius: ≥ 50 mm / 2"

Required materials

- Shielded 2-wire insulated copper cable
- Insulating tube, size according to the cable being used
- Heat-shrinkable tubing
- DIN 46 228 wire end ferrules: size according to the cable being used

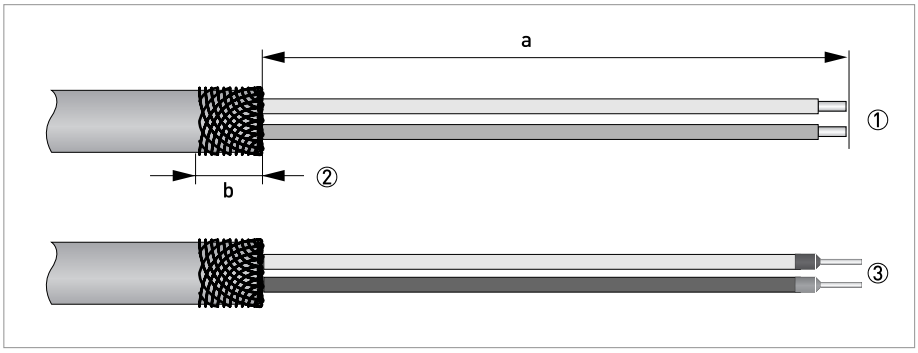

Figure 4-30: Preparation of field current cable C

a = 125 mm / 5"
b = 10 mm / 0.4"

① Strip the conductor to dimension a.
② Trim the outer shield to dimension b and pull it over the outer sheath.
③ Crimp wire end ferrules onto both conductors.

At flow converter side:

Connecting shielding under clamp in connection box of converter

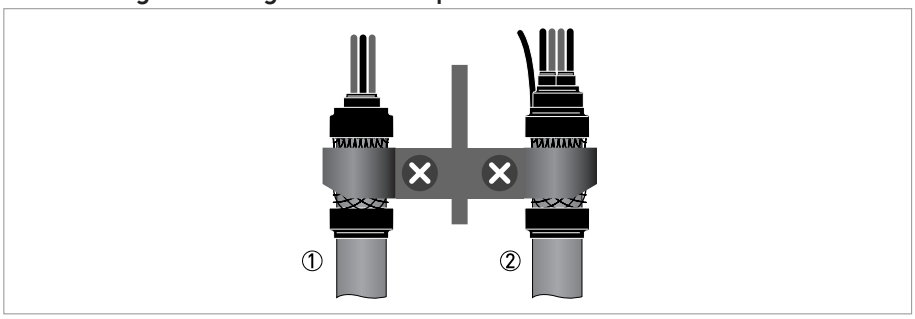

Figure 4-31: Clamping of shields

① Field current cable
② Signal cable

At flow sensor side:

Connecting shielding via special cable gland

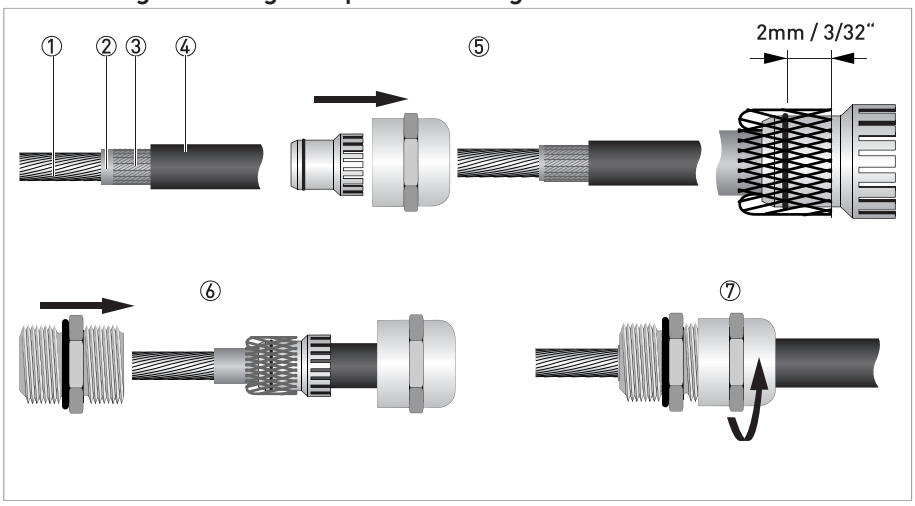

Figure 4-32: Connecting the shield within the cable gland

① Wires
② Isolation
③ Shielding
④ Isolation
⑤ Feed cable through dome nut and clamping insert and fold shielding over clamping insert. Make sure that the braided shield overlaps the O-ring by 2 mm / 3/32".
⑥ Push clamping insert into body.
⑦ Tighten the dome nut.

4.6.10 Interface cable

The data interface cable is a shielded, 3 x 1.5 mm^2 LIYCY cable. The standard length 10 m / 32.8 ft is included in the delivery.

Preparing the interface cable

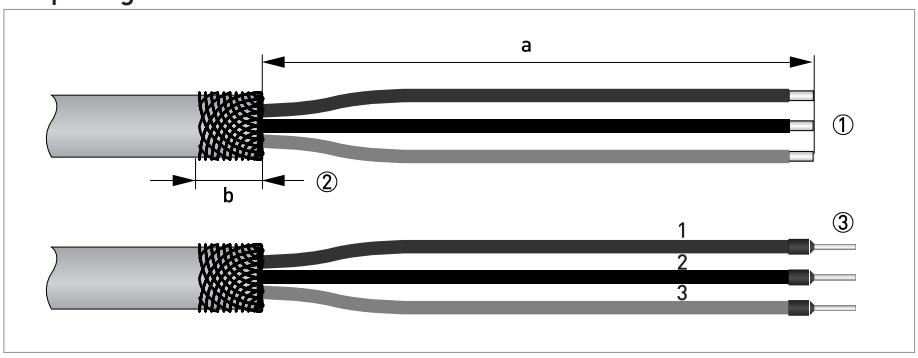

Figure 4-33: Preparing the interface cable

a = 100 mm / 4"
b = 10 mm / 0.4"

① Strip the conductor to dimension a.
② Trim the outer shield to dimension b and pull it over the outer sheath.
③ Crimp the wire end ferrules onto the conductors 1, 2 and 3.

Connect the shielding at both sides of the cable via the special cable gland.

Connecting shielding via special cable gland

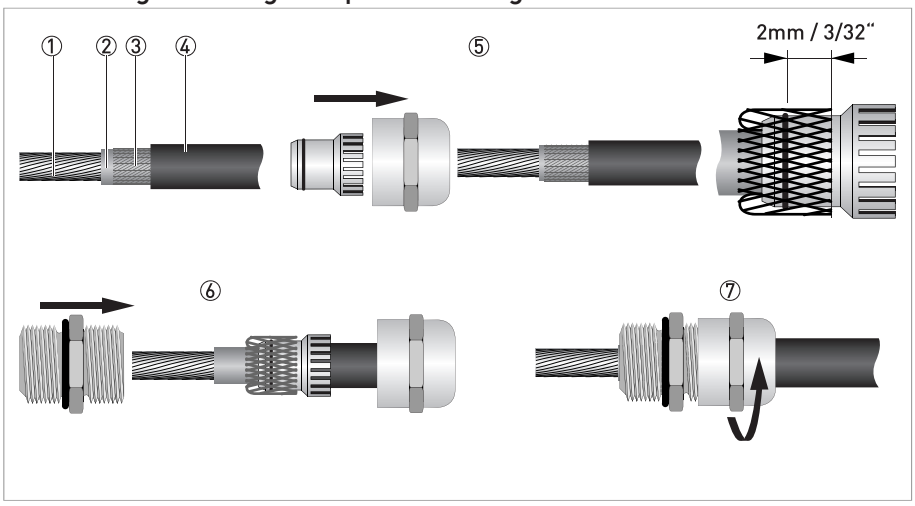

Figure 4-34: Connecting the shield within the cable gland

① Wires
② Isolation
③ Shielding
④ Isolation
⑤ Feed cable through dome nut and clamping insert and fold shielding over clamping insert. Make sure that the braided shield overlaps the O-ring by 2 mm / 3/32".
⑥ Push clamping insert into body.
⑦ Tighten the dome nut.

4.6.11 Connection of cables

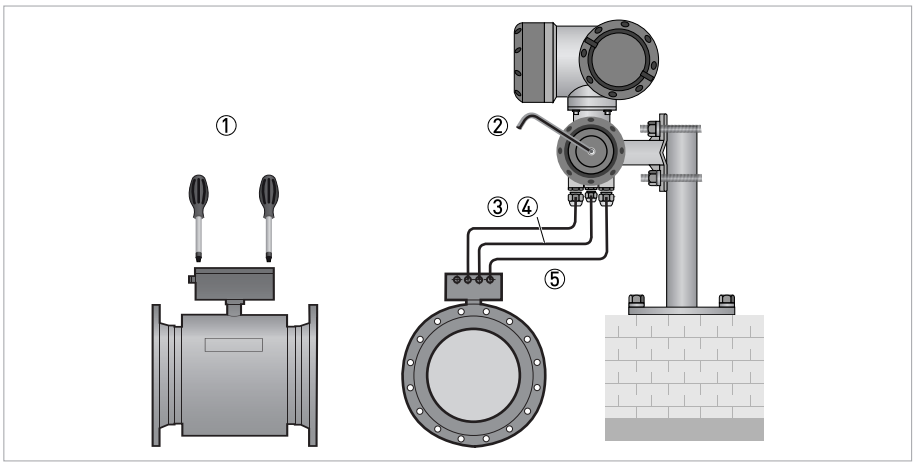

Figure 4-35: Electrical connection

① Unscrew the cover to reach the connectors
② Unscrew the cover to reach the connectors
③ Field current cable
④ Interface cable
⑤ Signal cable (DS or BTS)

Connection diagram

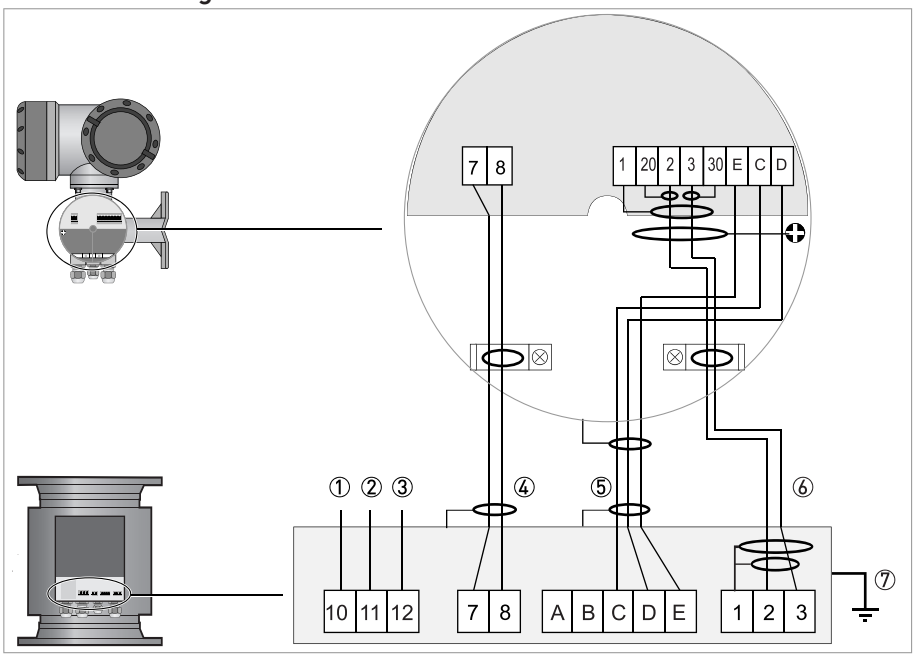

Figure 4-36: Connection diagram

① Protective Earth connection (PE)
② Mains power neutral (N)
③ Mains power live (L)
④ Field current cable
⑤ Interface cable
⑥ Signal cable. Shown is the BTS cable. In case of DS cable, do not use connectors 20 and 30.
⑦ Connect housing to PE

Flow sensors with protection class IP 68 can not be opened anymore. The cables are factory connected and labeled as follows.

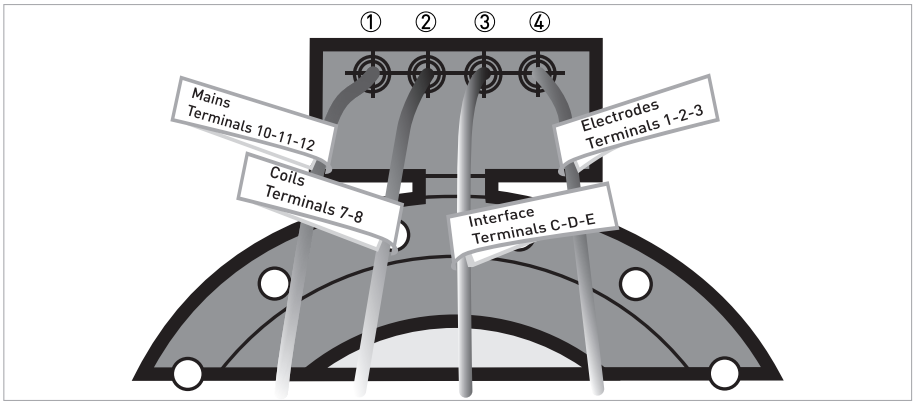

Figure 4-37: Labeled cables for IP 68 versions

① Mains power (10 = blank, 11 = blue, 12 = black)
② Field current (7 = white, 8 = green)
③ Data interface (black wires, C = marked "1", D = marked "2", E = marked "3")
④ Electrodes (1 = blank, 2 = white, 3 = red)

4.7 Grounding the measuring sensor

4.7.1 Classical method

CAUTION!
There should be no difference in potential between the measuring sensor and the housing or protective earth of the signal converter!

- The measuring sensor must be properly grounded.
- The grounding cable should not transmit any interference voltages.
- Do not use the grounding cable to connect more than one device to ground at the same time.
- In hazardous areas, grounding is used at the same time for equipotential bonding. Additional grounding instructions are provided in the separate Ex documentation, which are only supplied together with hazardous-duty equipment.
- The measuring sensors are connected to ground by means of a functional grounding conductor FE.
- Special grounding instructions for the various measuring sensors are provided in the separate documentation for the measuring sensor.
- The documentation for the measuring sensor also contain descriptions on how to use grounding rings and how to install the measuring sensor in metal or plastic pipes or in pipes which are coated on the inside.

4.7.2 Virtual reference (not valid for TIDALFLUX 4000 & OPTIFLUX 7300 C)

For pipelines which are electrically insulated on the inside (e.g. have an inner liner or are made completely out of plastic), it is also possible to measure without additional grounding rings or electrodes.
The signal converter's input amplifier records the potentials of both measuring electrodes and a patented method is used to create a voltage which corresponds to the potential of the ungrounded medium. This voltage is then the reference potential for signal processing. That means there are no interfering potential differences between the reference potential and the measuring electrodes during signal processing.
Ungrounded use is also possible for systems with voltages and currents in the pipelines, e. g. electrolysis and galvanic systems.

INFORMATION!
If there is a virtual reference with wall housing, voltage is permitted between PE/FE of the converter and the measuring sensor!

Thresholds for measuring operation with the virtual reference

Size	≥ DN10 / ≥ 3/8"
Electrical conductivity	≥200 µS/cm
Signal cable	use only A (type DS 300)
Signal cable length	≤ 50 m / ≤ 150 ft

4.8 Power supply connection

DANGER!
The device must be grounded in accordance with regulations in order to protect personnel against electric shocks.

DANGER!
For devices used in hazardous areas, additional safety notes apply; please refer to the Ex documentation.

- The protection category depends on the housing versions (IP65...67 to IEC 529 / EN 60529 or NEMA4/4X/6).
- The housings of the devices, which are designed to protect the electronic equipment from dust and moisture, should be kept well closed at all times. Creepage distances and clearances are dimensioned to VDE 0110 and IEC 664 for pollution severity 2. Supply circuits are designed for overvoltage category III and the output circuits for overvoltage category II.
- Fuse protection ($I_N \leq 16$ A) for the infeed power circuit, as well as a separator (switch, circuit breaker) to isolate the signal converter must be provided close to the device.
  The separator must conform to IEC 60947-1 and IEC 60947-3 and must be marked as the separator for this device.

100...230 VAC (tolerance range: -15% / +10%)

- Note the power supply voltage and frequency (50...60 Hz) on the nameplate.
- The protective ground terminal **PE** of the power supply must be connected to the separate U-clamp terminal in the terminal compartment of the signal converter
  For 19" rack-mounted housing please refer to the connection diagrams.

INFORMATION!
240 VAC + 5% is included in the tolerance range.

12...24 VDC (tolerance range: -55% / +30%)

- Note the data on the nameplate!
- When connecting to functional extra-low voltages, provide a facility for protective separation (PELV) (acc. to VDE 0100 / VDE 0106 and/or IEC 364 / IEC 536 or relevant national regulations).

INFORMATION!
12 VDC - 10% is included in the tolerance range.

24 VAC/DC (tolerance range: AC: -15% / +10%; DC: -25% / +30%)

- AC: Note the power supply voltage and frequency (50...60 Hz) on the nameplate.
- DC: When connecting to functional extra-low voltages, provide a facility for protective separation (PELV) (acc. to VDE 0100 / VDE 0106 and/or IEC 364 / IEC 536 or relevant national regulations).

INFORMATION!
*12 V is **not** included in the tolerance range.*

Power supply connection (excluding 19" rack-mounted housing)

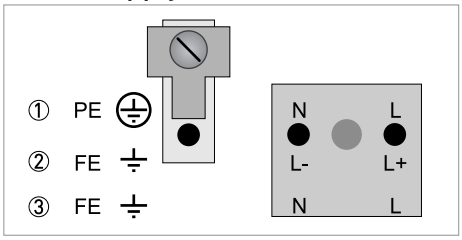

① 100...230 VAC (-15% / +10%), 22 VA
② 24 VDC (-55% / +30%), 12 W
③ 24 VAC/DC (AC: -15% / +10%; DC: -25% / +30%), 22 VA or 12 W

Power supply connection for 19" rack-mounted housing (28 TE)

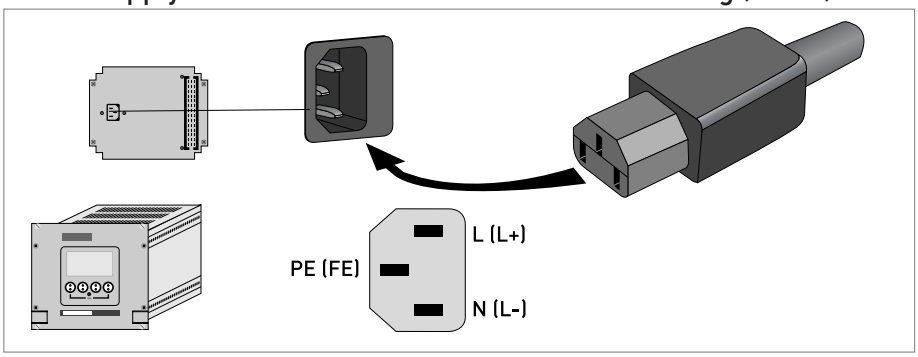

Power supply connection for 19" rack-mounted housing (21 TE)

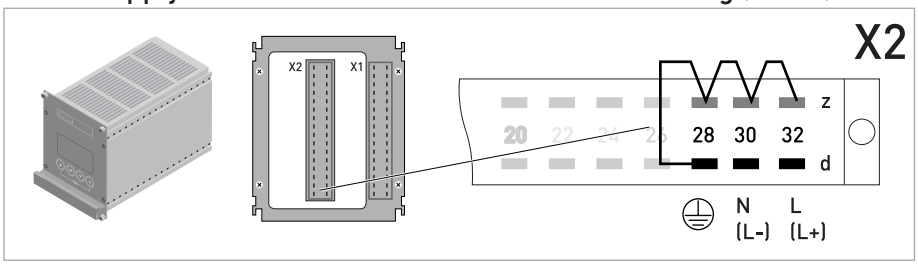

INFORMATION!
For safety reasons the manufacturer has connected the 28d contacts internally to the 28z, 30z and 32z contacts. You are advised to also connect contacts 28z, 30z and 32z to the external protective conductor.

CAUTION!
The protective conductor contacts must not be used to loop through the PE connection.

4.9 Inputs and outputs, overview

4.9.1 Combinations of the inputs/outputs (I/Os)

This signal converter is available with various input/output combinations.

Basic version

- Has 1 current output, 1 pulse output and 2 status outputs / limit switches.
- The pulse output can be set as status output/limit switch and one of the status outputs as a control input.

Ex i version

- Depending on the task, the device can be configured with various output modules.
- Current outputs can be active or passive.
- Optionally available also with Foundation Fieldbus and Profibus PA

Modular version

- Depending on the task, the device can be configured with various output modules.

Bus systems

- The device allows intrinsically safe and non intrinsically safe bus interfaces in combination with additional modules.
- For connection and operation of bus systems, please note the separate documentation.

Ex option

- For hazardous areas, all of the input/output variants for the housing designs C and F with terminal compartment in the Ex d (pressure-resistant casing) or Ex e (increased safety) versions can be delivered.
- Please refer to the separate instructions for connection and operation of the Ex-devices.

4.9.2 Description of the CG number

CG 3_ _ _ _ _ _ _
① ② ③ ④ ⑤ ⑥ ⑦

Figure 4-38: Marking (CG number) of the electronics module and input/output variants

① ID number: 0
② ID number: 0 = standard; 9 = special
③ Power supply option / measuring sensor option
④ Display (language versions)
⑤ Input/output version (I/O)
⑥ 1st optional module for connection terminal A
⑦ 2nd optional module for connection terminal B

The last 3 digits of the CG number (⑤, ⑥ and ⑦) indicate the assignment of the terminal connections. Please see the following examples.

Examples for CG number

CG 300 11 100	100...230 VAC & standard display; basic I/O: I_a or I_p & S_p/C_p & S_p & P_p/S_p
CG 300 11 7FK	100...230 VAC & standard display; modular I/O: I_a & P_N/S_N and optional module P_N/S_N & C_N
CG 300 81 4EB	24 VDC & standard display; modular I/O: I_a & P_a/S_a and optional module P_p/S_p & I_p

Description of abbreviations and CG identifier for possible optional modules on terminals A and B

Abbreviation	Identifier for CG No.	Description
I_a	A	Active current output
I_p	B	Passive current output
P_a / S_a	C	Active pulse, frequency, status output or limit switch (changeable)
P_p / S_p	E	Passive pulse, frequency, status output or limit switch (changeable)
P_N / S_N	F	Passive pulse, frequency, status output or limit switch according to NAMUR (changeable)
C_a	G	Active control input
C_p	K	Passive control input
C_N	H	Active control input to NAMUR Signal converter monitors cable breaks and short circuits acc. to EN 60947-5-6. Errors indicated on LC display. Error messages possible via status output.
IIn_a	P	Active current input
IIn_p	R	Passive current input
-	8	No additional module installed
-	0	No further module possible

4.9.3 Fixed, non-alterable input/output versions

This signal converter is available with various input/output combinations.

- The grey boxes in the tables denote unassigned or unused connection terminals.
- In the table, only the final digits of the CG no. are depicted.
- Connection terminal A+ is only operable in the basic input/output version.

CG no.	Connection terminals								
	A+	A	A-	B	B-	C	C-	D	D-

Basic I/Os (standard)

1 0 0		I_p + HART® passive ①	S_p / C_p passive ②	S_p passive	P_p / S_p passive ②
	I_a + HART® active ①				

Ex i IOs (option)

2 0 0				I_a + HART® active	P_N / S_N NAMUR ②
3 0 0				I_p + HART® passive	P_N / S_N NAMUR ②
2 1 0		I_a active	P_N / S_N NAMUR C_p passive ②	I_a + HART® active	P_N / S_N NAMUR ②
3 1 0		I_a active	P_N / S_N NAMUR C_p passive ②	I_p + HART® passive	P_N / S_N NAMUR ②
2 2 0		I_p passive	P_N / S_N NAMUR C_p passive ②	I_a + HART® active	P_N / S_N NAMUR ②
3 2 0		I_p passive	P_N / S_N NAMUR C_p passive ②	I_p + HART® passive	P_N / S_N NAMUR ②
2 3 0		IIn_a active	P_N / S_N NAMUR C_p passive ②	I_a + HART® active	P_N / S_N NAMUR ②
3 3 0		IIn_a active	P_N / S_N NAMUR C_p passive ②	I_p + HART® passive	P_N / S_N NAMUR ②
2 4 0		IIn_p passive	P_N / S_N NAMUR C_p passive ②	I_a + HART® active	P_N / S_N NAMUR ②
3 4 0		IIn_p passive	P_N / S_N NAMUR C_p passive ②	I_p + HART® passive	P_N / S_N NAMUR ②

CG no.	Connection terminals								
	A+	A	A-	B	B-	C	C-	D	D-

PROFIBUS PA (Ex i) (option)

D 0 0				PA+	PA-	PA+	PA-
				FISCO Device		FISCO Device	
D 1 0		I_a active	P_N / S_N NAMUR C_p passive ②	PA+	PA-	PA+	PA-
				FISCO Device		FISCO Device	
D 2 0		I_p passive	P_N / S_N NAMUR C_p passive ②	PA+	PA-	PA+	PA-
				FISCO Device		FISCO Device	
D 3 0		IIn_a active	P_N / S_N NAMUR C_p passive ②	PA+	PA-	PA+	PA-
				FISCO Device		FISCO Device	
D 4 0		IIn_p passive	P_N / S_N NAMUR C_p passive ②	PA+	PA-	PA+	PA-
				FISCO Device		FISCO Device	

FOUNDATION Fieldbus (Ex i) (option)

E 0 0				V/D+	V/D-	V/D+	V/D-
				FISCO Device		FISCO Device	
E 1 0		I_a active	P_N / S_N NAMUR C_p passive ②	V/D+	V/D-	V/D+	V/D-
				FISCO Device		FISCO Device	
E 2 0		I_p passive	P_N / S_N NAMUR C_p passive ②	V/D+	V/D-	V/D+	V/D-
				FISCO Device		FISCO Device	
E 3 0		IIn_a active	P_N / S_N NAMUR C_p passive ②	V/D+	V/D-	V/D+	V/D-
				FISCO Device		FISCO Device	
E 4 0		IIn_p passive	P_N / S_N NAMUR C_p passive ②	V/D+	V/D-	V/D+	V/D-
				FISCO Device		FISCO Device	

① function changed by reconnecting
② changeable

4.9.4 Alterable input/output versions

This signal converter is available with various input/output combinations.

- The grey boxes in the tables denote unassigned or unused connection terminals.
- In the table, only the final digits of the CG no. are depicted.
- Term. = (connection) terminal

CG no.	Connection terminals								
	A+	A	A-	B	B-	C	C-	D	D-

Modular IOs (option)

4 _ _		max. 2 optional modules for term. A + B	I_a + HART® active	P_a / S_a active ①
8 _ _		max. 2 optional modules for term. A + B	I_p + HART® passive	P_a / S_a active ①
6 _ _		max. 2 optional modules for term. A + B	I_a + HART® active	P_p / S_p passive ①
B _ _		max. 2 optional modules for term. A + B	I_p + HART® passive	P_p / S_p passive ①
7 _ _		max. 2 optional modules for term. A + B	I_a + HART® active	P_N / S_N NAMUR ①
C _ _		max. 2 optional modules for term. A + B	I_p + HART® passive	P_N / S_N NAMUR ①

PROFIBUS PA (option)

D _ _		max. 2 optional modules for term. A + B	PA+ (2)	PA- (2)	PA+ (1)	PA- (1)

FOUNDATION Fieldbus (option)

E _ _		max. 2 optional modules for term. A + B	V/D+ (2)	V/D- (2)	V/D+ (1)	V/D- (1)

PROFIBUS DP (option)

F _ 0		1 optional module for term. A	Terminati on P	RxD/TxD-P(2)	RxD/TxD-N(2)	Terminati on N	RxD/TxD-P(1)	RxD/TxD-N(1)

Modbus (Option)

G _ _ ②		max. 2 optional modules for term. A + B		Common	Sign. B (D1)	Sign. A (D0)
H _ _ ③		max. 2 optional modules for term. A + B		Common	Sign. B (D1)	Sign. A (D0)

① changeable
② not activated bus terminator
③ activated bus terminator

4.10 Description of the inputs and outputs

4.10.1 Current output

INFORMATION!
The current outputs must be connected depending on the version! Which I/O versions and inputs/outputs are installed in your signal converter are indicated on the sticker in the cover of the terminal compartment.

- All outputs are electrically isolated from each other and from all other circuits.
- All operating data and functions can be adjusted.
- Passive mode: external power $U_{ext} \leq 32$ VDC at $I \leq 22$ mA
- Active mode: load impedance $R_L \leq 1$ kΩ at $I \leq 22$ mA;
  $R_L \leq 450$ Ω at $I \leq 22$ mA for Ex i outputs
- Self-monitoring: interruption or load impedance too high in the current output loop
- Error message possible via status output, error indication on LC display.
- Current value error detection can be adjusted.
- Automatic range conversion via threshold or control input. The setting range for the threshold is between 5 and 80% of $Q_{100\%}$, ± 0...5% hysteresis (corresponding ratio from smaller to larger range of 1:20 to 1:1.25).
  Signaling of the active range possible via a status output (adjustable).
- Forward / reverse flow measurement (F/R mode) is possible.

INFORMATION!
For further information refer to Connection diagrams of inputs and outputs on page 82 and refer to *Technical data on page 144*.

DANGER!
For devices used in hazardous areas, additional safety notes apply; please refer to the Ex documentation.

4.10.2 Pulse and frequency output

INFORMATION!
Depending on the version, the pulse and frequency outputs must be connected passively or actively or according to NAMUR EN 60947-5-6! Which I/O version and inputs/outputs are installed in your signal converter are indicated on the sticker in the cover of the terminal compartment.

- All outputs are electrically isolated from each other and from all other circuits.
- All operating data and functions can be adjusted.
- Passive mode:
  External power supply required: $U_{ext} \leq 32$ VDC
  $I \leq 20$ mA at $f \leq 10$ kHz (override up to $f_{max} \leq 12$ kHz)
  $I \leq 100$ mA at $f \leq 100$ Hz
- Active mode:
  Use of the internal power supply: $U_{nom} = 24$ VDC
  $I \leq 20$ mA at $f \leq 10$ kHz (override up to $f_{max} \leq 12$ kHz)
  $I \leq 20$ mA at $f \leq 100$ Hz
- NAMUR mode: passive in accordance with EN 60947-5-6, $f \leq 10$ kHz,
  over range up to $f_{max} \leq 12$ kHz
- Scaling:
  Frequency output: in pulses per time unit (e.g. 1000 pulses/s at $Q_{100\%}$);
  Pulse output: quantity per pulse.
- Pulse width:
  Symmetric (pulse duty factor 1:1, independent of output frequency)
  automatic (with fixed pulse width, duty factor approx. 1:1 at $Q_{100\%}$) or
  fixed (pulse width adjustable as required from 0.05 ms...2 s)
- Forward / reverse flow measurement (F/R mode) is possible.
- All pulse and frequency outputs can also be used as a status output / limit switch.

CAUTION!
At frequencies above 100 Hz, shielded cables must be used to prevent radio interference.

INFORMATION!
For further information refer to Connection diagrams of inputs and outputs on page 82 and refer to *Technical data on page 144*.

DANGER!
For devices used in hazardous areas, additional safety notes apply; please refer to the Ex documentation.

4.10.3 Status output and limit switch

INFORMATION!
Depending on the version, the status outputs and limit switches must be connected passively or actively or according to NAMUR EN 60947-5-6! Which I/O version and inputs/outputs are installed in your signal converter are indicated on the sticker in the cover of the terminal compartment.

- The status outputs / limit switches are electrically isolated from each other and from all other circuits.
- The output stages of the status outputs/limit switches during simple active or passive operation behave like relay contacts and can be connected with any polarity.
- All operating data and functions can be adjusted.
- Passive mode: external power supply required:
  $U_{ext} \leq 32$ VDC; $I \leq 100$ mA
- Active mode: use of the internal power supply:
  $U_{nom} = 24$ VDC; $I \leq 20$ mA
- NAMUR mode: passive in accordance with EN 60947-5-6
- For information on the adjustable operating states refer to *Function tables* on page 111.

INFORMATION!
For further information refer to Connection diagrams of inputs and outputs on page 82 and refer to *Technical data on page 144*.

DANGER!
For devices used in hazardous areas, additional safety notes apply; please refer to the Ex documentation.

4.10.4 Control input

INFORMATION!
Depending on the version, the control inputs must be connected passively or actively or according to NAMUR EN 60947-5-6! Which I/O version and inputs/outputs are installed in your signal converter are indicated on the sticker in the cover of the terminal compartment.

- All control inputs are electrically isolated from each other and from all other circuits.
- All operating data and functions can be adjusted.
- Passive mode: external power supply required:
  $U_{ext} \leq 32$ VDC
- Active mode: use of the internal power supply:
  $U_{nom} = 24$ VDC
- NAMUR mode: in accordance with EN 60947-5-6
  (Active control input to NAMUR EN 60947-5-6: signal converter monitors cable breaks and short circuits acc. to EN 60947-5-6. Errors indicated on LC display. Error messages possible via status output.
- For information on the adjustable operating states refer to *Function tables* on page 111.

INFORMATION!
For further information refer to Connection diagrams of inputs and outputs on page 82 and refer to *Technical data on page 144*.

DANGER!
For devices used in hazardous areas, additional safety notes apply; please refer to the Ex documentation.

4.10.5 Current input

INFORMATION!
Depending on the version, the current inputs must be connected passively or actively! Which I/O version and inputs/outputs are installed in your signal converter are indicated on the sticker in the cover of the terminal compartment.

- All current inputs are electrically isolated from each other and from all other circuits.
- All operating data and functions can be adjusted.
- Passive mode: external power supply required:
  $U_{ext} \leq 32$ VDC
- Active mode: use of the internal power supply:
  $U_{int, nom} = 24$ VDC
- For information on the adjustable operating states refer to *Function tables* on page 111.

INFORMATION!
For further information refer to Connection diagrams of inputs and outputs on page 82 and refer to *Technical data on page 144*.

DANGER!
For devices used in hazardous areas, additional safety notes apply; please refer to the Ex documentation.

4.11 Electrical connection of the inputs and outputs

INFORMATION!
Assembly materials and tools are not part of the delivery. Use the assembly materials and tools in compliance with the applicable occupational health and safety directives.

4.11.1 Field housing, electrical connection of the inputs and outputs

DANGER!
All work on the electrical connections may only be carried out with the power disconnected. Take note of the voltage data on the nameplate!

- For frequencies above 100 Hz, shielded cables are to be used in order to reduce radiation from electrical interferences (EMC).
- Terminal A+ is only operable in the basic version.

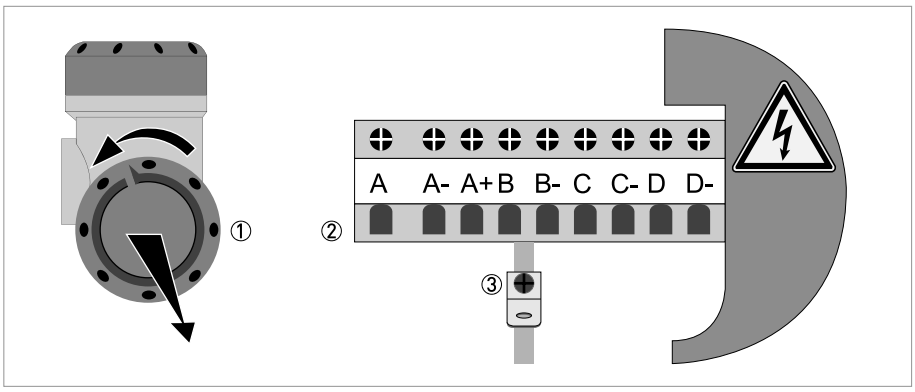

Figure 4-39: Terminal compartment for inputs and outputs in field housing

① Open the housing cover
② Push the prepared cable through the cable entry and connect the necessary conductors.
③ Connect the shield if necessary.

- Close the cover of the terminal compartment.
- Close the housing cover.

INFORMATION!
Each time a housing cover is opened, the thread should be cleaned and greased. Use only resin-free and acid-free grease.
Ensure that the housing gasket is properly fitted, clean and undamaged.

4.11.2 Wall-mounted housing, electrical connection of the inputs and outputs

DANGER!
All work on the electrical connections may only be carried out with the power disconnected. Take note of the voltage data on the nameplate!

- For frequencies above 100 Hz, shielded cables are to be used in order to reduce radiation from electrical interferences (EMC). The shield must be electrically connected using 6.3 mm / 0.25" push-on connectors (insulation to DIN 46245) in the I/O terminal compartment.
- Terminal A+ is only operable in the basic version.

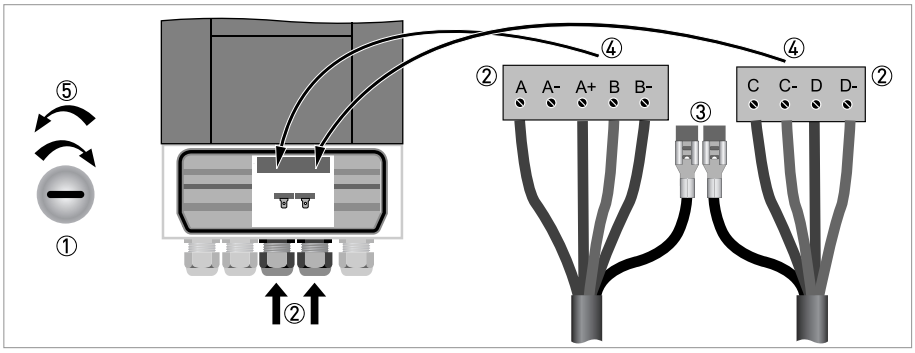

Figure 4-40: Connection of inputs and outputs in wall-mounted housing

① Open the housing cover
② Push the prepared cables through the cable entry and connect them to the supplied connector plugs ④.
③ Connect the shield if necessary.
④ Route the connector plugs with the clamped conductors into the sockets provided for that purpose.
⑤ Close the housing cover.

INFORMATION!
Ensure that the housing gasket is properly fitted, clean and undamaged.

4.11.3 19" rack-mounted housing (28 TE), electrical connection of the inputs and outputs

DANGER!
All work on the electrical connections may only be carried out with the power disconnected. Take note of the voltage data on the nameplate!

- For frequencies above 100 Hz, shielded cables are to be used in order to reduce effects from electrical interferences (EMC).
- Terminal A+ is only operable in the basic version.

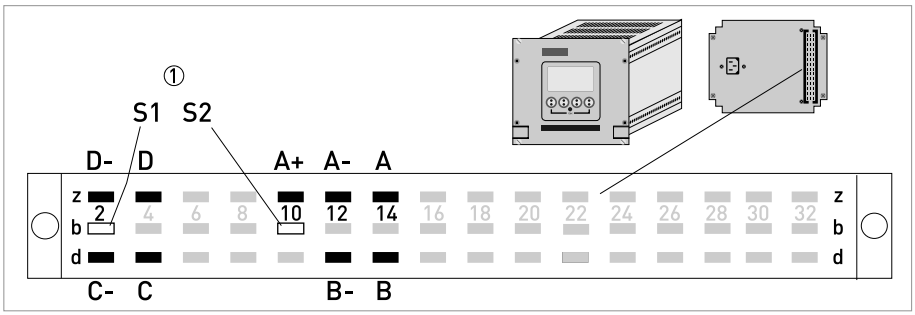

Figure 4-41: Terminal compartment for inputs and outputs in rack-mounted housing

① Shielding

- Connect the conductor to the multipolar plug according to the illustration.
- The signal cable shield is connected to the Pin S.
- Press the plug into the connector.

4.11.4 19" rack-mounted housing (21 TE), electrical connection of the inputs and outputs

DANGER!
All work on the electrical connections may only be carried out with the power disconnected. Take note of the voltage data on the nameplate!

- For frequencies above 100 Hz, shielded cables are to be used in order to reduce effects from electrical interferences (EMC).
- Terminal A+ is only operable in the basic version.

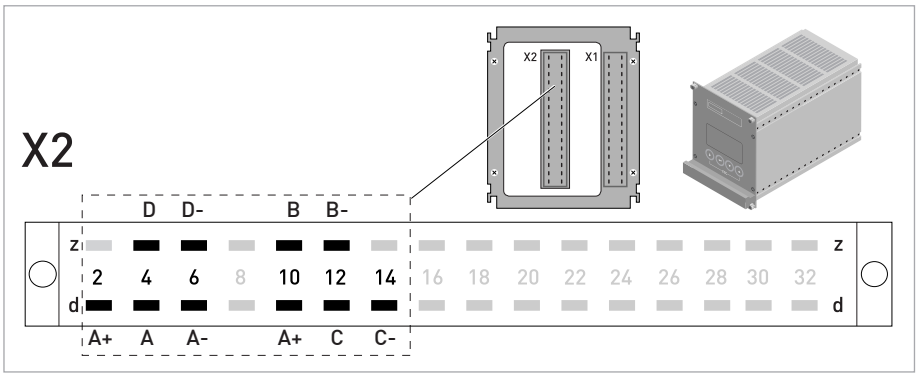

Figure 4-42: Terminal compartment for inputs and outputs in rack-mounted housing

- Connect the conductor to the multipolar plug according to the illustration.
- Press the plug into the connector.

4.11.5 Laying electrical cables correctly

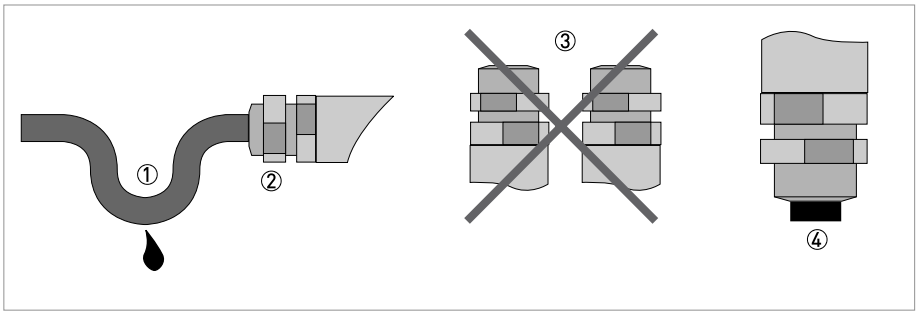

Figure 4-43: Protect housing from dust and water

① Lay the cable in a loop just before the housing.
② Tighten the screw connection of the cable entry securely.
③ Never mount the housing with the cable entries facing upwards.
④ Seal cable entries that are not needed with a plug.

4.12 Connection diagrams of inputs and outputs

4.12.1 Important notes

INFORMATION!
Depending on the version, the inputs/outputs must be connected passively or actively or acc. to NAMUR EN 60947-5-6! Which I/O version and inputs/outputs are installed in your signal converter are indicated on the sticker in the cover of the terminal compartment.

- All groups are electrically isolated from each other and from all other input and output circuits.
- Passive operating mode: An external power supply is necessary to operate (activation) the subsequent devices (U_{ext}).
- Active operating mode: The signal converter supplies the power for operation (activation) of the subsequent devices, observe max. operating data.
- Terminals that are not used should not have any conductive connection to other electrically conductive parts.

DANGER!
For devices used in hazardous areas, additional safety notes apply; please refer to the Ex documentation.

Description of used abbreviations

I_a	I_p	Current output active or passive
P_a	P_p	Pulse/frequency output active or passive
P_N		Pulse/frequency output passive acc. to NAMUR EN 60947-5-6
S_a	S_p	Status output/limit switch active or passive
S_N		Status output/limit switch passive acc. to NAMUR EN 60947-5-6
C_a	C_p	Control input active or passive
C_N		Control input active acc. to NAMUR EN 60947-5-6: Signal converter monitors cable breaks and short circuits acc. to EN 60947-5-6. Errors indicated on LC display. Error messages possible via status output.
IIn_a	IIn_p	Current input active or passive

4.12.2 Description of the electrical symbols

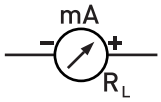	mA meter 0...20 mA or 4...20 mA and other R_L is the internal resistance of the measuring point including the cable resistance
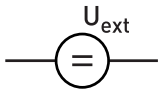	DC voltage source (U_{ext}), external power supply, any connection polarity
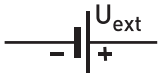	DC voltage source (U_{ext}), observe connection polarity according to connection diagrams
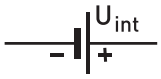	Internal DC voltage source
	Controlled internal power source in the device
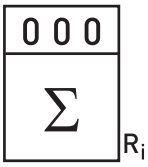	Electronic or electromagnetic counter At frequencies above 100 Hz, shielded cables must be used to connect the counters. R_i Internal resistance of the counter
	Button, NO contact or similar

Table 4-1: Description of symbols

4.12.3 Basic inputs/outputs

CAUTION!
Observe connection polarity.

Current output active (HART®), basic I/Os

- $U_{int, nom}$ = 24 VDC nominal
- I ≤ 22 mA
- R_L ≤ 1 kΩ

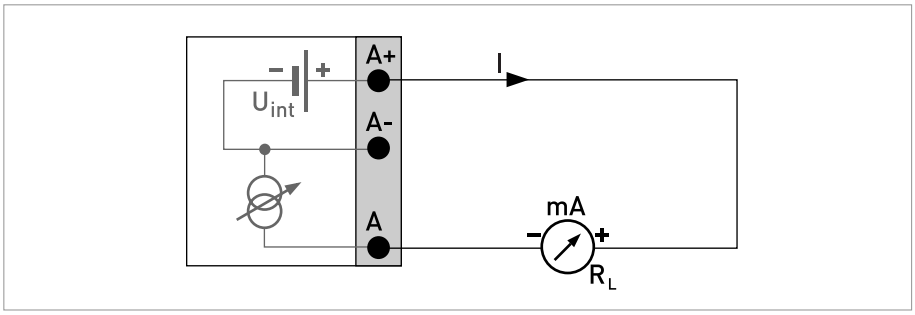

Figure 4-44: Current output active I_a

Current output passive (HART®), basic I/Os

- $U_{int, nom}$ = 24 VDC nominal
- U_{ext} ≤ 32 VDC
- I ≤ 22 mA
- U_0 ≥ 1.8 V
- R_L ≤ (U_{ext} - U_0) / I_{max}

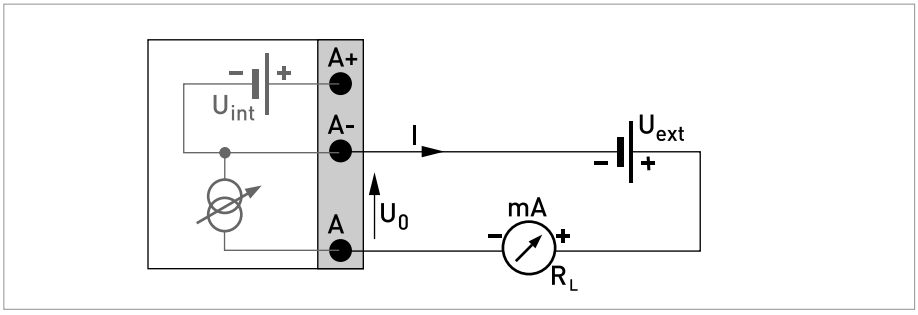

Figure 4-45: Current output passive I_p

INFORMATION!

- *For frequencies above 100 Hz, shielded cables are to be used in order to reduce effects from electrical interferences (EMC).*
- ***Compact and field housing versions:*** *Shield connected via the cable terminals in the terminal compartment.*

  Wall-mounted version: *Shield connected using 6.3 mm / 0.25" push-on connectors (insulation to DIN 46245) in the terminal compartment.*
- *Any connection polarity.*

Pulse/frequency output passive, basic I/Os

- $U_{ext} \leq 32$ VDC
- f_{max} in operating menu set to $f_{max} \leq 100$ Hz:
  $I \leq 100$ mA
  open:
  $I \leq 0.05$ mA at $U_{ext} = 32$ VDC
  closed:
  $U_{0,\ max} = 0.2$ V at $I \leq 10$ mA
  $U_{0,\ max} = 2$ V at $I \leq 100$ mA
- f_{max} in the operating menu set to 100 Hz < $f_{max} \leq 10$ kHz:
  $I \leq 20$ mA
  open:
  $I \leq 0.05$ mA at $U_{ext} = 32$ VDC
  closed:
  $U_{0,\ max} = 1.5$ V at $I \leq 1$ mA
  $U_{0,\ max} = 2.5$ V at $I \leq 10$ mA
  $U_{0,\ max} = 5.0$ V at $I \leq 20$ mA
- If the following maximum load resistance $R_{L,\ max}$ is exceeded, the load resistance R_L must be reduced accordingly by parallel connection of R:
  $f \leq 100$ Hz: $R_{L,\ max} = 47$ kΩ
  $f \leq 1$ kHz: $R_{L,\ max} = 10$ kΩ
  $f \leq 10$ kHz: $R_{L,\ max} = 1$ kΩ
- The minimum load resistance $R_{L,\ min}$ is calculated as follows:
  $R_{L,\ min} = (U_{ext} - U_0) / I_{max}$
- Can also be set as status output; for the electrical connection refer to status output connection diagram.

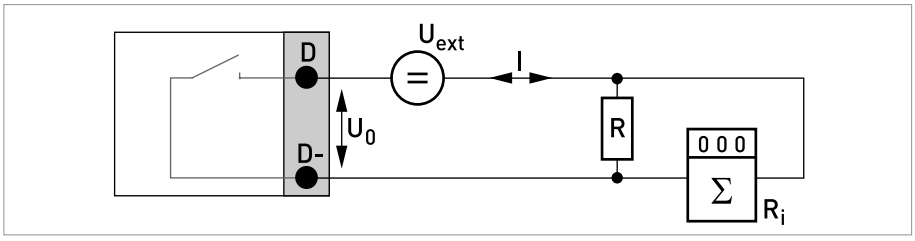

Figure 4-46: Pulse/frequency output passive P_p

INFORMATION!
- *Any connection polarity.*

Status output / limit switch passive, basic I/Os

- $U_{ext} \leq 32$ VDC
- $I \leq 100$ mA
- $R_{L,\ max} = 47\ k\Omega$
  $R_{L,\ min} = (U_{ext} - U_0) / I_{max}$
- open:
  $I \leq 0.05$ mA at $U_{ext} = 32$ VDC
  closed:
  $U_{0,\ max} = 0.2$ V at $I \leq 10$ mA
  $U_{0,\ max} = 2$ V at $I \leq 100$ mA
- The output is open when the device is de-energized.
- X stands for the terminals B, C or D. The functions of the connection terminals depend on the settings refer to *Function tables* on page 111.

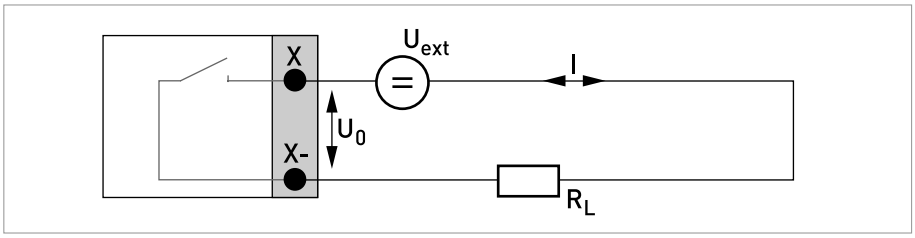

Figure 4-47: Status output / limit switch passive S_p

Control input passive, basic I/Os

- $8\ V \leq U_{ext} \leq 32$ VDC
- $I_{max} = 6.5$ mA at $U_{ext} \leq 24$ VDC
  $I_{max} = 8.2$ mA at $U_{ext} \leq 32$ VDC
- Switching point for identifying "contact open or closed":
  Contact open (off): $U_0 \leq 2.5$ V with $I_{nom} = 0.4$ mA
  Contact closed (on): $U_0 \geq 8$ V with $I_{nom} = 2.8$ mA
- Can also be set as a status output; for the electrical connection refer to status output connection diagram.

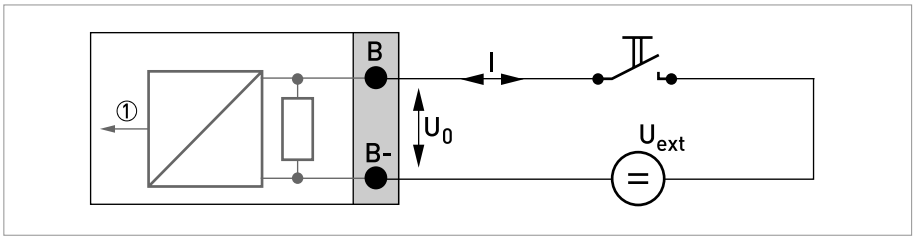

Figure 4-48: Control input passive C_p

① Signal

4.12.4 Modular inputs/outputs and bus systems

CAUTION!
Observe connection polarity.

INFORMATION!
- *For further information on electrical connection refer to Description of the inputs and outputs on page 73.*
- *For the electrical connection of bus systems, please refer to the separate documentation for the respective bus systems.*

Current output active (only current output terminals C/C- have HART® capability), modular I/Os

- $U_{int, nom}$ = 24 VDC
- I ≤ 22 mA
- R_L ≤ 1 kΩ
- X designates the connection terminals A, B or C, depending on the version of the signal converter.

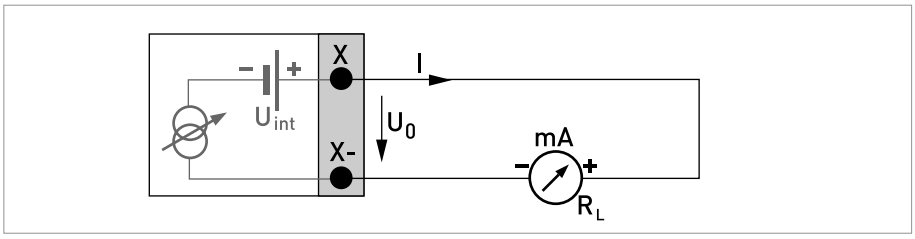

Figure 4-49: Current output active I_a

Current output passive (only current output terminals C/C- have HART® capability), modular I/Os

- U_{ext} ≤ 32 VDC
- I ≤ 22 mA
- U_0 ≥ 1.8 V
- R_L ≤ (U_{ext} - U_0) / I_{max}
- X designates the connection terminals A, B or C, depending on the version of the signal converter.

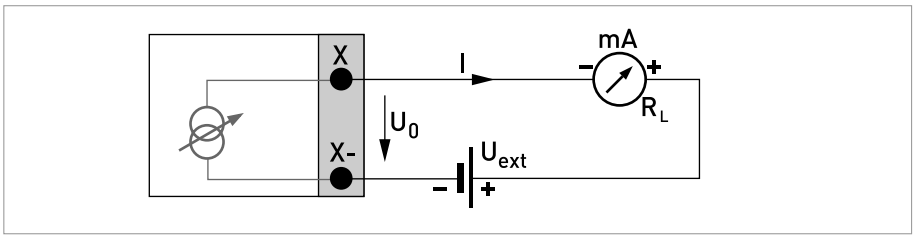

Figure 4-50: Current output passive I_p

INFORMATION!

- *For frequencies above 100 Hz, shielded cables are to be used in order to reduce effects from electrical interferences (EMC).*
- ***Compact and field housing versions:*** *Shield connected via the cable terminals in the terminal compartment.*

  Wall-mounted version: *Shield connected using 6.3 mm / 0.25" push-on connectors (insulation to DIN 46245) in the terminal compartment.*
- *Any connection polarity.*

Pulse/frequency output active, modular I/Os

- U_{nom} = 24 VDC
- f_{max} in operating menu set to $f_{max} \leq 100$ Hz:
  I ≤ 20 mA
  open:
  I ≤ 0.05 mA
  closed:
  $U_{0,\ nom}$ = 24 V at I = 20 mA
- f_{max} in the operating menu set to 100 Hz < $f_{max} \leq 10$ kHz:
  I ≤ 20 mA
  open:
  I ≤ 0.05 mA
  closed:
  $U_{0,\ nom}$ = 22.5 V at I = 1 mA
  $U_{0,\ nom}$ = 21.5 V at I = 10 mA
  $U_{0,\ nom}$ = 19 V at I = 20 mA
- If the following maximum load resistance $R_{L,\ max}$ is exceeded, the load resistance R_L must be reduced accordingly by parallel connection of R:
  f ≤ 100 Hz: $R_{L,\ max}$ = 47 kΩ
  f ≤ 1 kHz: $R_{L,\ max}$ = 10 kΩ
  f ≤ 10 kHz: $R_{L,\ max}$ = 1 kΩ
- The minimum load resistance $R_{L,\ min}$ is calculated as follows:
  $R_{L,\ min} = (U_{ext} - U_0) / I_{max}$
- X designates the connection terminals A, B or D, depending on the version of the signal converter.

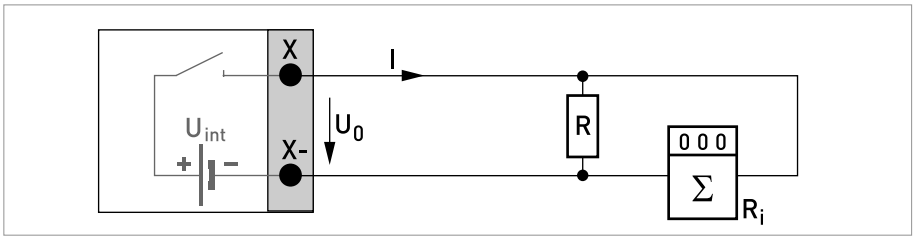

Figure 4-51: Pulse / frequency output active P_a

INFORMATION!
For frequencies above 100 Hz, shielded cables are to be used in order to reduce effects from electrical interferences (EMC).

Pulse/frequency output passive, modular I/Os

- $U_{ext} \leq 32$ VDC
- f_{max} in the operating menu set to $f_{max} \leq 100$ Hz:
  $I \leq 100$ mA
  open:
  $I \leq 0.05$ mA at $U_{ext} = 32$ VDC
  closed:
  $U_{0,\ max} = 0.2$ V at $I \leq 10$ mA
  $U_{0,\ max} = 2$ V at $I \leq 100$ mA
- f_{max} in the operating menu set to 100 Hz < $f_{max} \leq 10$ kHz:
  open:
  $I \leq 0.05$ mA at $U_{ext} = 32$ VDC
  closed:
  $U_{0,\ max} = 1.5$ V at $I \leq 1$ mA
  $U_{0,\ max} = 2.5$ V at $I \leq 10$ mA
  $U_{0,\ max} = 5$ V at $I \leq 20$ mA
- If the following maximum load resistance $R_{L,\ max}$ is exceeded, the load resistance R_L must be reduced accordingly by parallel connection of R:
  $f \leq 100$ Hz: $R_{L,\ max} = 47$ kΩ
  $f \leq 1$ kHz: $R_{L,\ max} = 10$ kΩ
  $f \leq 10$ kHz: $R_{L,\ max} = 1$ kΩ
- The minimum load resistance $R_{L,\ min}$ is calculated as follows:
  $R_{L,\ min} = (U_{ext} - U_0) / I_{max}$
- Can also be set as status output; refer to status output connection diagram.
- X designates the connection terminals A, B or D, depending on the version of the signal converter.

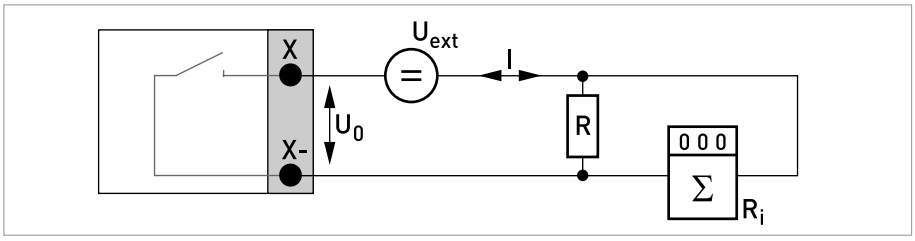

Figure 4-52: Pulse frequency output passive P_p

INFORMATION!

- *For frequencies above 100 Hz, shielded cables are to be used in order to reduce effects from electrical interferences (EMC).*
- ***Compact and field housing versions:*** *Shield connected via the cable terminals in the terminal compartment.*

  Wall-mounted version: *Shield connected using 6.3 mm / 0.25" push-on connectors (insulation to DIN 46245) in the terminal compartment.*
- *Any connection polarity.*

Pulse and frequency output passive P_N NAMUR, modular I/O

- Connection in conformity with EN 60947-5-6
- open:
  I_{nom} = 0.6 mA
  closed:
  I_{nom} = 3.8 mA
- X designates the connection terminals A, B or D, depending on the version of the signal converter.

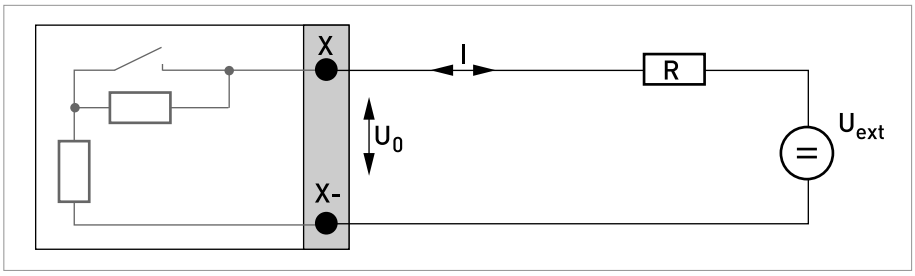

Figure 4-53: Pulse and frequency output passive P_N to NAMUR EN 60947-5-6

Status output / limit switch active, modular I/Os

- Observe connection polarity.
- U_{int} = 24 VDC
- I ≤ 20 mA
- R_L ≤ 47 kΩ
- open:
  I ≤ 0.05 mA
  closed:
  $U_{0,\ nom}$ = 24 V at I = 20 mA
- X designates the connection terminals A, B or D, depending on the version of the signal converter.

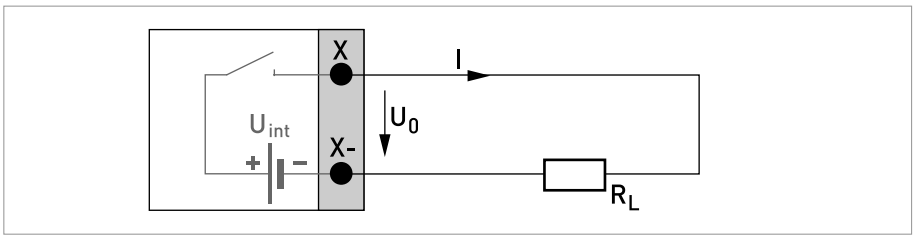

Figure 4-54: Status output / limit switch active S_a

Status output / limit switch passive, modular I/Os

- Any connection polarity.
- U_{ext} = 32 VDC
- I ≤ 100 mA
- $R_{L,\ max}$ = 47 kΩ
  $R_{L,\ min} = (U_{ext} - U_0) / I_{max}$
- open:
  I ≤ 0.05 mA at U_{ext} = 32 VDC
  closed:
  $U_{0,\ max}$ = 0.2 V at I ≤ 10 mA
  $U_{0,\ max}$ = 2 V at I ≤ 100 mA
- The output is open when the device is de-energized.
- X designates the connection terminals A, B or D, depending on the version of the signal converter.

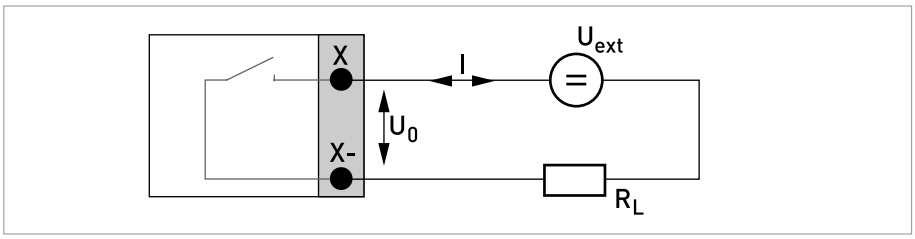

Figure 4-55: Status output / limit switch passive S_p

Status output / limit switch S_N NAMUR, modular I/Os

- Any connection polarity.
- Connection in conformity with EN 60947-5-6
- open:
  I_{nom} = 0.6 mA
  closed:
  I_{nom} = 3.8 mA
- The output is open when the device is de-energized.
- X designates the connection terminals A, B or D, depending on the version of the signal converter.

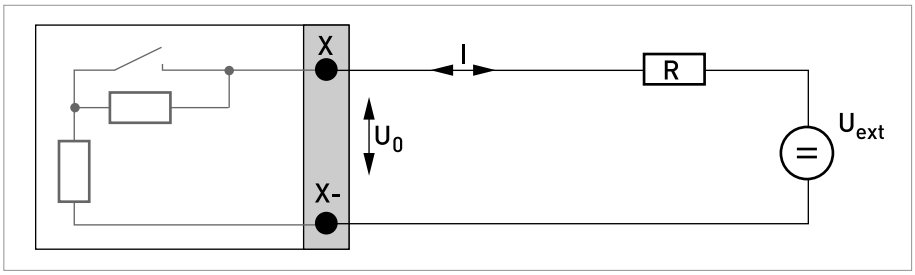

Figure 4-56: Status output / limit switch S_N to NAMUR EN 60947-5-6

CAUTION!
Observe connection polarity.

Control input active, modular I/Os

- U_{int} = 24 VDC
- External contact open:
  $U_{0,\ nom}$ = 22 V
  External contact closed:
  I_{nom} = 4 mA
- Switching point for identifying "contact open or closed":
  Contact open (off): $U_0 \leq 10$ V with I_{nom} = 1.9 mA
  Contact closed (on): $U_0 \geq 12$ V with I_{nom} = 1.9 mA
- X designates the connection terminals A or B, depending on the version of the signal converter.

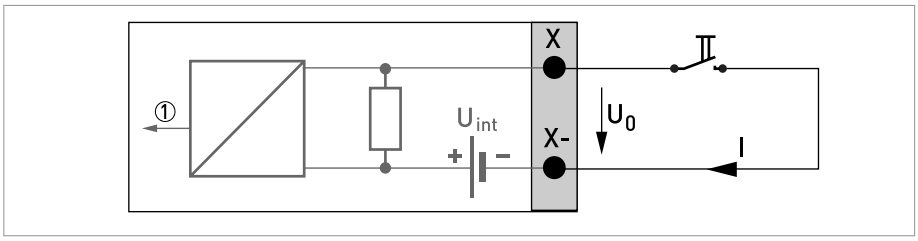

Figure 4-57: Control input active C_a

① Signal

Control input passive, modular I/Os

- 3 V ≤ U_{ext} ≤ 32 VDC
- I_{max} = 9.5 mA at U_{ext} ≤ 24 V
  I_{max} = 9.5 mA at U_{ext} ≤ 32 V
- Switching point for identifying "contact open or closed":
  Contact open (off): $U_0 \leq 2.5$ V with I_{nom} = 1.9 mA
  Contact closed (on): $U_0 \geq 3$ V with I_{nom} = 1.9 mA
- X designates the connection terminals A or B, depending on the version of the signal converter.

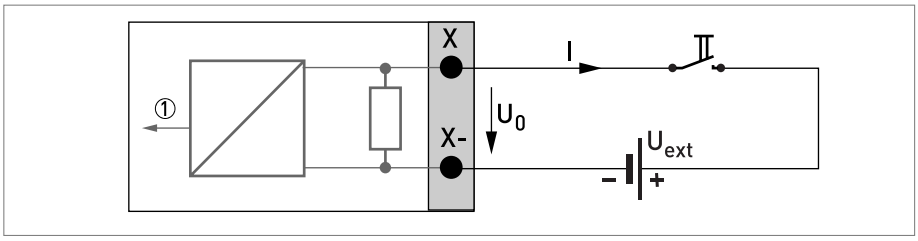

Figure 4-58: Control input passive C_p

① Signal

CAUTION!
Observe connection polarity.

Control input active C_N NAMUR, modular I/Os

- Connection acc. to EN 60947-5-6
- Switching point for identifying "contact open or closed":
  Contact open (off): $U_{0,\ nom}$ = 6.3 V with I_{nom} < 1.9 mA
  Contact closed (on): $U_{0,\ nom}$ = 6.3 V with I_{nom} > 1.9 mA
- Detection of cable break:
  $U_0 \geq 8.1$ V with $I \leq 0.1$ mA
- Detection of cable short circuit:
  $U_0 \leq 1.2$ V with $I \geq 6.7$ mA
- X designates the connection terminals A or B, depending on the version of the signal converter.

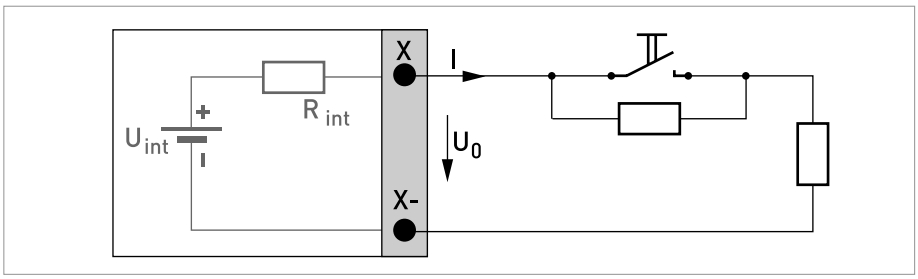

Figure 4-59: Control input active C_N to NAMUR EN 60947-5-6

Current input active, modular I/Os

- $U_{int, nom}$ = 24 VDC
- I ≤ 22 mA
- I_{max} ≤ 26 mA (electronically limited)
- $U_{0, min}$ = 19 V at I ≤ 22 mA
- **no** HART
- X designates the connection terminals A or B, depending on the version of the signal converter.

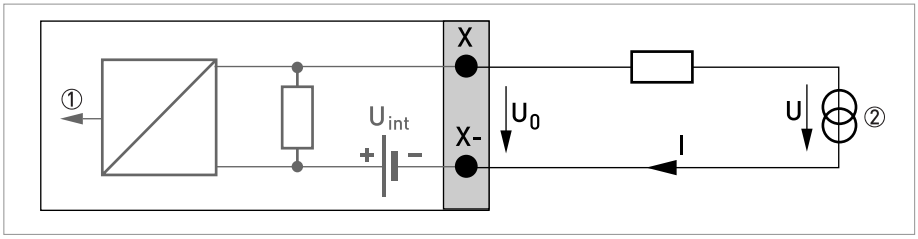

Figure 4-60: Current input active IIn_a

① Signal
② 2-wire transmitter (e.g. temperature)

Current input passive, modular I/Os

- U_{ext} ≤ 32 VDC
- I ≤ 22 mA
- I_{max} ≤ 26 mA
- $U_{0, max}$ = 5 V at I ≤ 22 mA
- X designates the connection terminals A or B, depending on the version of the signal converter.

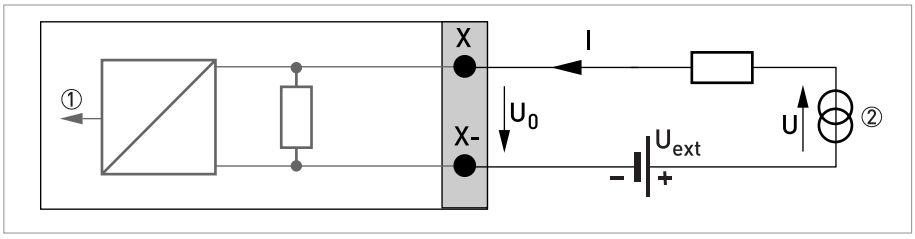

Figure 4-61: Current input passive IIn_p

① Signal
② 2-wire transmitter (e.g. temperature)

4.12.5 Ex i inputs/outputs

DANGER!
For devices used in hazardous areas, additional safety notes apply; please refer to the Ex documentation.

INFORMATION!
For further information on electrical connection refer to Description of the inputs and outputs on page 73.

Current output active (only current output terminals C/C- have HART® capability), Ex i I/Os

- Observe connection polarity.
- $U_{int, nom}$ = 20 VDC
- I ≤ 22 mA
- R_L ≤ 450 Ω
- X designates the connection terminals A or C, depending on the version of the signal converter.

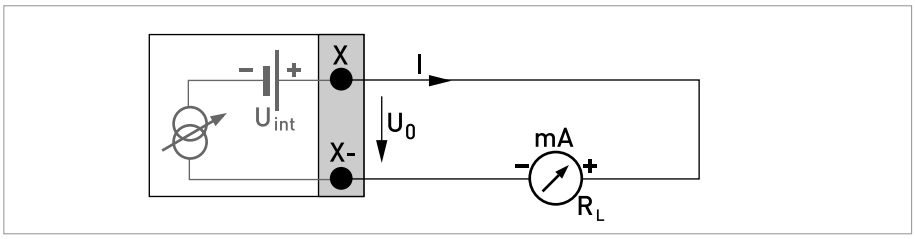

Figure 4-62: Current output active I_a Exi

Current output passive (only current output terminals C/C- have HART® capability), Ex i I/Os

- Any connection polarity.
- U_{ext} ≤ 32 VDC
- I ≤ 22 mA
- U_0 ≥ 4 V
- $R_{L, min} = (U_{ext} - U_0) / I_{max}$
- X designates the connection terminals A or C, depending on the version of the signal converter.

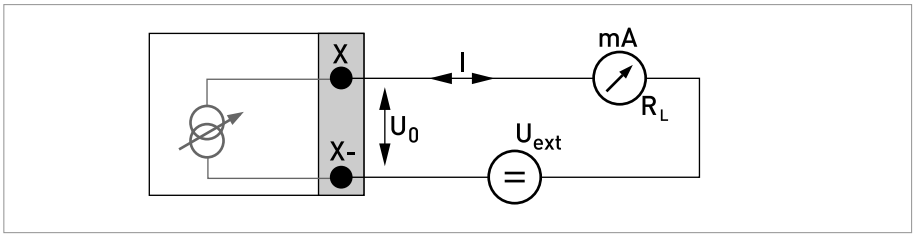

Figure 4-63: Current output passive I_p Exi

DANGER!
For devices used in hazardous areas, additional safety notes apply; please refer to the Ex documentation.

INFORMATION!
- *For frequencies above 100 Hz, shielded cables are to be used in order to reduce effects from electrical interferences (EMC).*
- ***Compact and field housing versions:*** *Shield connected via the cable terminals in the terminal compartment.*

  Wall-mounted version: *Shield connected using 6.3 mm / 0.25" push-on connectors (insulation to DIN 46245) in the terminal compartment.*
- *Any connection polarity.*

Pulse and frequency output passive P_N NAMUR, Ex i I/Os

- Connection acc. to EN 60947-5-6
- open:
  I_{nom} = 0.43 mA
  closed:
  I_{nom} = 4.5 mA
- X designates the connection terminals B or D, depending on the version of the signal converter.

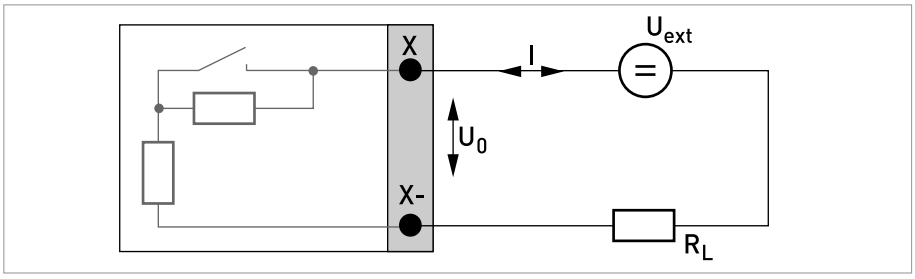

Figure 4-64: Pulse and frequency output passive P_N as per NAMUR EN 60947-5-6 Exi

INFORMATION!
- *Any connection polarity.*

Status output/limit switch S_N NAMUR, Ex i I/Os

- Connection acc. to EN 60947-5-6
- open:
  I_{nom} = 0.43 mA
  closed:
  I_{nom} = 4.5 mA
- The output is closed when the device is de-energized.
- X designates the connection terminals B or D, depending on the version of the signal converter.

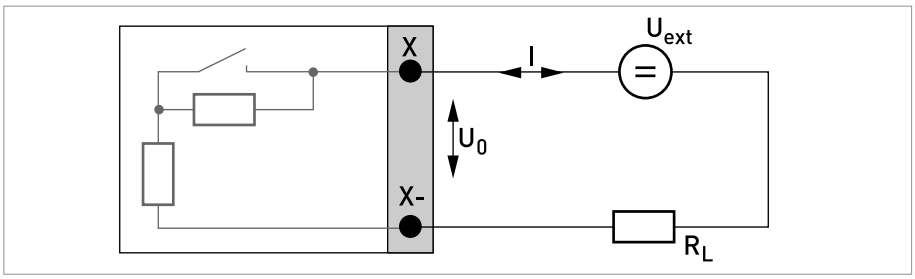

Figure 4-65: Status output/limit switch S_N to NAMUR EN 60947-5-6 Exi

DANGER!
For devices used in hazardous areas, additional safety notes apply; please refer to the Ex documentation.

INFORMATION!
- *Any connection polarity.*

Control input passive, Ex i I/Os

- $5.5\ V \leq U_{ext} \leq 32$ VDC
- $I_{max} = 6$ mA at $U_{ext} \leq 24$ V
  $I_{max} = 6.5$ mA at $U_{ext} \leq 32$ V
- Switching point for identifying "contact open or closed":
  Contact open (off): $U_0 \leq 3.5$ V with $I \leq 0.5$ mA
  Contact closed (on): $U_0 \geq 5.5$ V with $I \geq 4$ mA
- X designates the connection terminals B, if available.

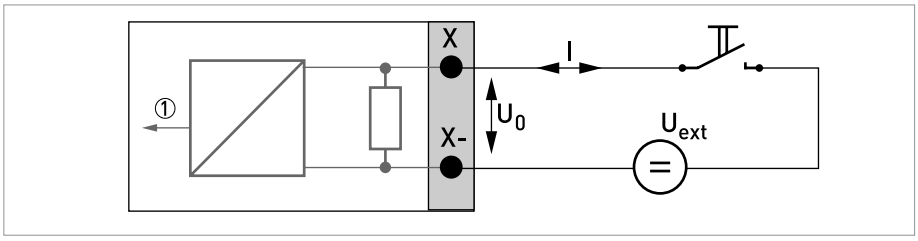

Figure 4-66: Control input passive C_p Exi

① Signal

Current input active, Ex i I/Os

- $U_{int, nom}$ = 20 VDC
- I ≤ 22 mA
- $U_{0, min}$ = 14 V at I ≤ 22 mA
- In the event of a short circuit, the voltage is cut off.
- X designates the connection terminals A or B, depending on the version of the signal converter.

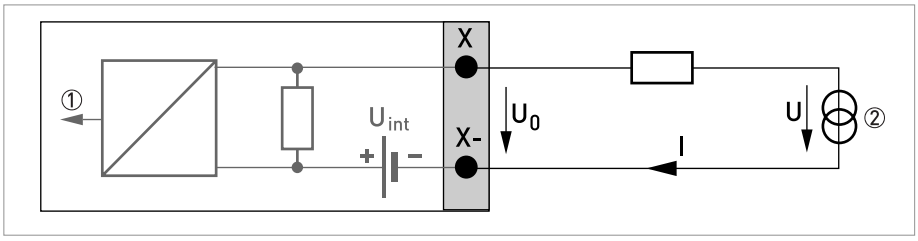

Figure 4-67: Current input active IIn_a

① Signal
② 2-wire transmitter (e.g. temperature)

Current input passive, Ex i I/Os

- U_{ext} ≤ 32 VDC
- I ≤ 22 mA
- $U_{0, max}$ = 4 V at I ≤ 22 mA
- X designates the connection terminals A or B, depending on the version of the signal converter.

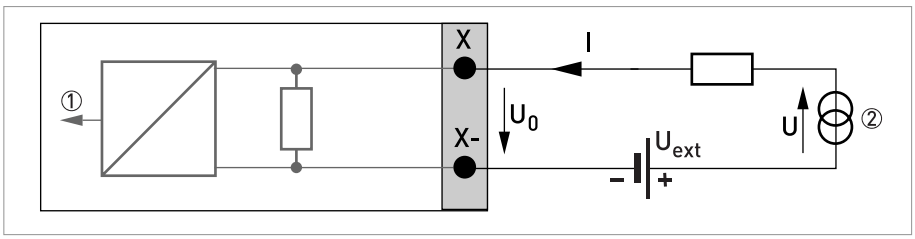

Figure 4-68: Current input passive IIn_p

① Signal
② 2-wire transmitter (e.g. temperature)

4.12.6 HART® connection

INFORMATION!

- *In the basic I/O the current output at connection terminals A+/A-/A always has HART® capability.*
- *For modular I/O, only the current output module for the connection terminals C/C- has HART® capability.*

HART® connection active (point-to-point)

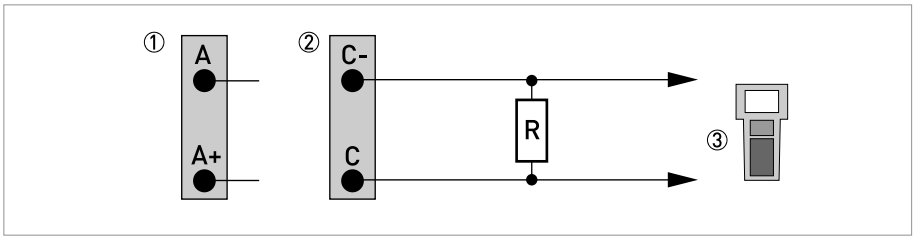

Figure 4-69: HART® connection active (I_a)

① Basic I/O: terminals A and A+
② Modular I/O: terminals C- and C
③ HART® communicator

The parallel resistance to the HART® communicator must be R ≥ 230 Ω.

HART® connection passive (Multi-Drop operation)

- I: $I_{0\%} \geq 4$ mA
- Multi-Drop mode I: $I_{fix} \geq 4$ mA = $I_{0\%}$
- $U_{ext} \leq 32$ VDC
- $R \geq 230\ \Omega$

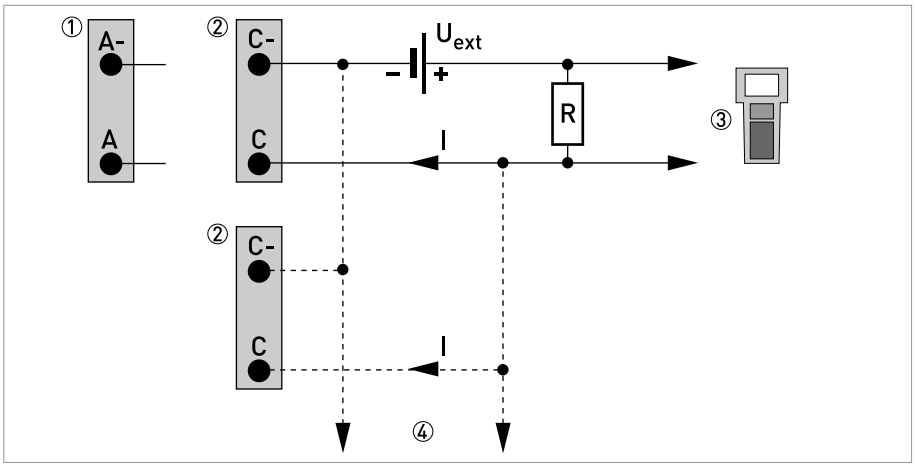

Figure 4-70: HART® connection passive (I_p)

① Basic I/O: terminals A- and A
② Modular I/O: terminals C- and C
③ HART® communicator
④ Other HART®- capable devices

5.1 Switching on the power

Before connecting to power, please check that the system has been correctly installed. This includes:

- The device must be mechanically safe and mounted in compliance with the regulations.
- The power connections must have been made in compliance with the regulations.
- The electrical terminal compartments must be secured and the covers have been screwed on.
- Check that the electrical operating data of the power supply are correct.

- Switching on the power.

5.2 Starting the signal converter

The measuring device, consisting of the measuring sensor and the signal converter, is supplied ready for operation. All operating data have been set at the factory in accordance with your order specifications.

When the power is switched on, a self test is carried out. After that the device immediately begins measuring, and the current values are displayed.

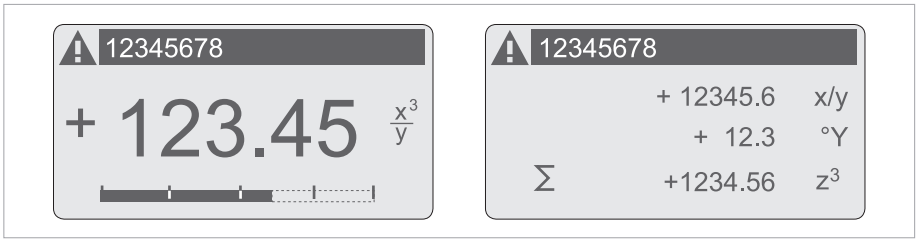

Figure 5-1: Displays in measuring mode (examples for 2 or 3 measured values)
x, y and z denote the units of the measured values displayed

It is possible to change between the two measured value windows, the trend display and the list with the status messages by pressing the keys ↑ and ↓. For information about possible status messages, their meaning and cause refer to *Status messages and diagnostic information* on page 135.

6.1 Display and operating elements

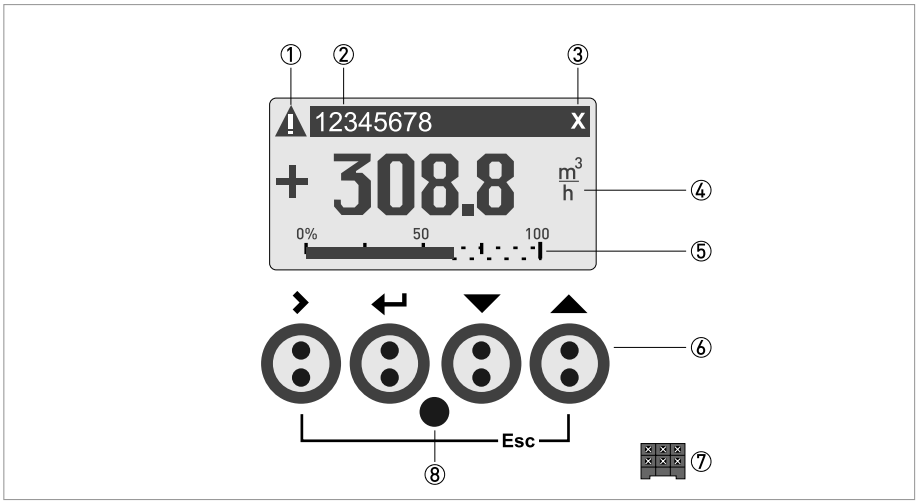

Figure 6-1: Display and operating elements (Example: flow indication with 2 measuring values)

① Indicates a possible status message in the status list
② Tag number (is only indicated if this number was entered previously by the operator)
③ Indicates when a key has been pressed
④ 1st measured variable in large representation
⑤ Bargraph indication
⑥ Keys (see table below for function and representation in text)
⑦ Interface to the GDC bus (not present in all signal converter versions)
⑧ Infrared sensor (not present in all signal converter versions)

INFORMATION!

- *The switching point for the 4 optical keys is located directly in front of the glass. It is recommended to activate the keys at right angles to the front. Touching them from the side can cause incorrect operation.*
- *After 5 minutes of inactivity, there is an automatic return to measuring mode. Previously changed data is not saved.*

Key	Measuring mode	Menu mode	Sub-menu or function mode	Parameter and data mode
>	Switch from measuring mode to menu mode; press key for 2.5 s, "Quick Start" menu is then displayed	Access to displayed menu, then 1st submenu is displayed	Access to displayed sub-menu or function	For numerical values, move cursor (highlighted in blue) one position to the right
↵	Reset of display	Return to measuring mode but prompt whether the data should be saved	Press 1 to 3 times, return to menu mode, data saved	Return to sub-menu or function, data saved
↓ or ↑	Switch between display pages: measured value 1 + 2, trend page and status page(s)	Select menu	Select sub-menu or function	Use cursor highlighted in blue to change number, unit, setting and to move the decimal point
Esc (> + ↑)	-	-	Return to menu mode without acceptance of data	Return to sub-menu or function without acceptance of data

Table 6-1: Description of key functionality

6.1.1 Display in measuring mode with 2 or 3 measured values

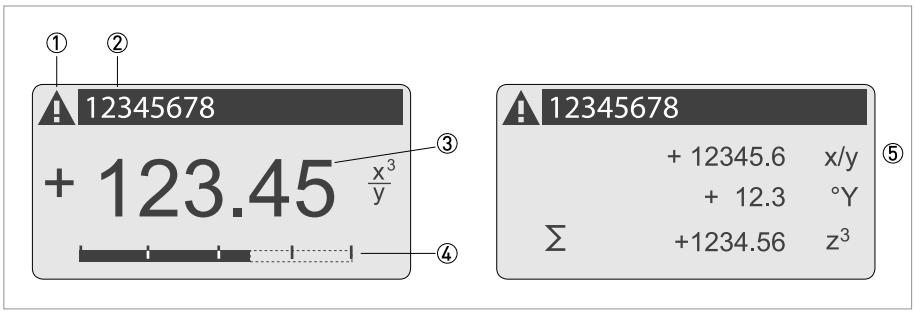

Figure 6-2: Example for display in measuring mode with 2 or 3 measured values

① Indicates a possible status message in the status list
② Tag number (is only indicated if this number was entered previously by the operator)
③ 1st measured variable in large depiction
④ Bargraph indication
⑤ Depiction with 3 measured values

6.1.2 Display for selection of sub-menu and functions, 3 lines

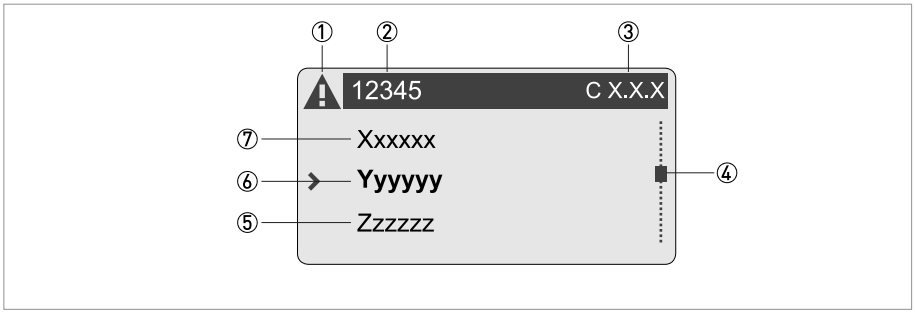

Figure 6-3: Display for selection of sub-menu and functions, 3 lines

① Indicates a possible status message in the status list
② Menu, sub-menu or function name
③ Number relating to ②
④ Indicates position within menu, sub-menu or function list
⑤ Next menu, sub-menu or function
(_ _ _ signalise in this line the end of the list)
⑥ Current menu, sub-menu or function
⑦ Previous menu, sub-menu or function
(_ _ _ signalise in this line the beginning of the list)

6.1.3 Display when setting parameters, 4 lines

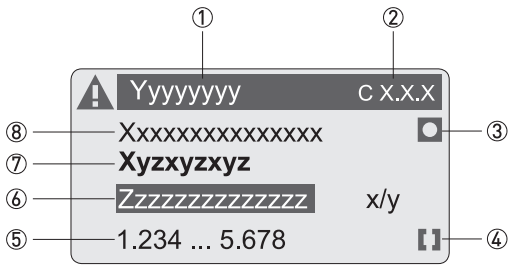

Figure 6-4: Display when setting parameters, 4 lines

① Current menu, sub-menu or function
② Number relating to ①
③ Denotes factory setting
④ Denotes permissible value range
⑤ Permissible value range for numeric values
⑥ Currently set value, unit or function (when selected, appears with white text, blue background) This is where the data is changed.
⑦ Current parameter (open with >)
⑧ Factory setting of parameter (non-alterable)

6.1.4 Display when changing parameters, 4 lines

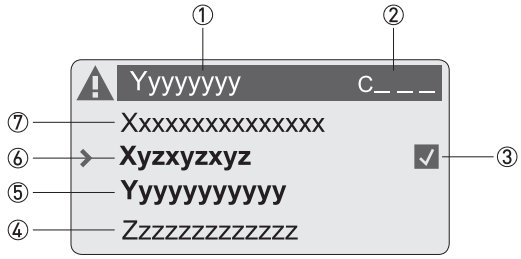

Figure 6-5: Display when changing parameters, 4 lines

① Current menu, sub-menu or function
② Number relating to ①
③ Denotes the change of a parameter (simple to check changed data when browsing through lists)
④ Next parameter
⑤ Currently set data from ⑥
⑥ Current parameter (for selection press key >; then see previous chapter)
⑦ Factory setting of parameter (non-alterable)

6.1.5 Using an IR interface (option)

The optical IR interface serves as an adapter for PC-based communication with the signal converter without opening the housing.

INFORMATION!

- *This device is not part of the scope of delivery.*
- *For more information about activation with the functions A6 or C5.6.6 refer to Function tables on page 111.*

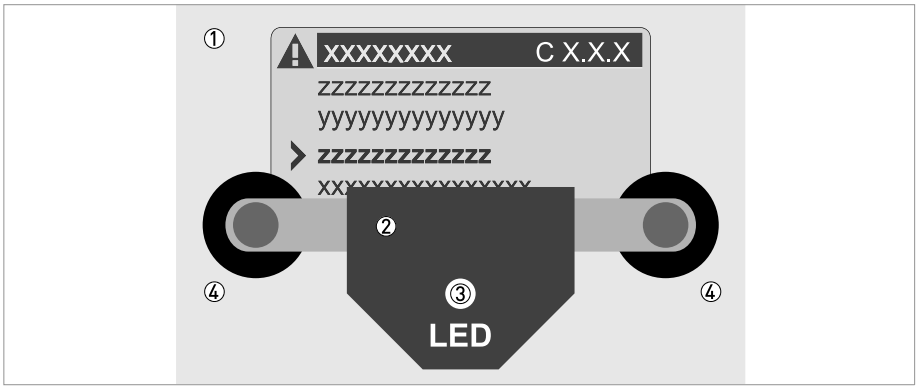

Figure 6-6: IR interface

① Glass panel in front of the control and display panel
② IR interface
③ LED lights up when IR interface is activated.
④ Suction cups

Time-out function

Following activation of the IR interface in Fct. A6 or C5.6.6 the interface must be properly positioned and attached to the housing with the suction cups within 60 seconds. If this does not happen within the specified time period, the device can be operated using the optical keys again. Upon activation, the LED ③ lights up and the optical keys no longer function.

6.2 Menu structure

INFORMATION!
Note the key function within and between the columns.

Measuring mode		Select menu	↓ ↑	Select menu and/or sub-menu ↓↑				Select function and set data ↓↑ >
↵	Press > 2.5 s							
	A quick setup		> ↵	A1 language			> ↵	
				A2 Tag				
				A3 reset	> ↵	A3.1 reset errors		
						A3.2 counter 1		
						A3.3 counter 2		
						A3.4 counter 3		
				A4 analogue outputs		A4.1 measurement		
						A4.2 unit		
						A4.3 range		
						A4.4 low flow cutoff		
						A4.5 time constant		
				A5 digital outputs		A5.1 measurement		
						A5.2 pulse value unit		
						A5.3 value p. pulse		
						A5.4 low flow cutoff		
				A6 GDC IR interface				
				A7 process input	> ↵	A7.1 device serial no.		
						A7.2 zero calibration		
						A7.3 size		
						A7.4 GK		
						A7.5 GKL		
						A7.6 coil resistance Rsp		
						A7.7 calib. coil temp.		
						A7.8 target conduct.		
						A7.9 EF electr. factor		
						A7.10 field frequency		
						A7.11 flow direction		
	↓↑			↓↑		↓↑		↓↑ >

Measuring mode			Select menu	↓ ↑	Select menu and/or sub-menu ↓↑				Select function and set data ↓↑ >
↵		Press > 2.5 s							
		B test		> ↵	B1 simulation	> ↵	B1.1 flow speed	> ↵	
							B1.2 volume flow		
							B1.☐ current out X		
							B1.☐ pulse output X		
							B1.☐ frequency out X		
							B1.☐ control input X		
							B1.☐ limit switch X		
							B1.☐ status output X		
							B1.☐ current input X		
							B1.7 flow fraction		
							B1.8 level		
					B2 actual values	> ↵	B2.1 operating hours		
							B2.2 act. flow speed		
							B2.3 act. coil temp.		
							B2.4 electr. temperature		
							B2.5 act. conductivity		
							B2.6 act. electr. noise		
							B2.7 act. flow profile		
							B2.8 act. coil resistance		
							B2.9 current input A		
							B2.10 current input B		
							B2.11 flow fraction		
							B2.12 level		
					B3 information	> ↵	B3.1 C number		
							B3.2 process input		
							B3.3 SW.REV.MS		
							B3.4 SW.REV.UIS		
							B3.6 Electronic Revision ER		
		↓↑			↓↑		↓↑		↓↑ >

Measuring mode				Select menu	↓ ↑	Select menu and/or sub-menu ↓↑				Select function and set data ↓↑>
↵		Press > 2.5 s								
		C setup			> ↵	C1 process input	> ↵	C1.1 calibration	> ↵	
								C1.2 filter		
								C1.3 self test		
								C1.4 information		
								C1.5 simulation		
↵					> ↵	C2 I/O (Input/Output)	> ↵	C2.1 hardware	> ↵	
								C2.☐ current out X		
								C2.☐ frequency out X		
								C2.☐ pulse output X		
								C2.☐ status output X		
								C2.☐ limit switch X		
								C2.☐ control input X		
								C2.☐ current input X		
↵					> ↵	C3 I/O counter	> ↵	C3.1 counter 1	> ↵	
								C3.2 counter 2		
								C3.3 counter 3		
↵					> ↵	C4 I/O HART	> ↵	C4.1 PV is	> ↵	
								C4.2 SV is		
								C4.3 TV is		
								C4.4 4V is		
								C4.5 HART units		
↵					> ↵	C5 device	> ↵	C5.1 device info	> ↵	
								C5.2 display		
								C5.3 1. meas. page		
								C5.4 2. meas. page		
								C5.5 graphic page		
								C5.6 special functions		
								C5.7 units		
								C5.8 HART		
								C5.9 quick setup		
		↓↑				↓↑		↓↑		↓↑>

6.3 Function tables

INFORMATION!
Depending on the device version, not all functions are available.
The description "PF option" used in the tables only refers to the TIDALFLUX 4000 measuring sensor / "CAP option" only refers to the OPTIFLUX 7000 measuring sensor.

6.3.1 Menu A, quick setup

No.	Function	Settings / descriptions

A1 language

A1	language	Language selection depends on the device version.

A2 Tag

A2	Tag	Measuring point identifier (Tag no.) appears in the LC display header.

A3 reset

A3	reset	-
A3.1	reset errors	reset? Select: no/yes
A3.2	reset counter 1	reset counter? Select: no / yes (available if activated in C5.9.1)
A3.3	reset counter 2	reset counter? Select: no / yes (available if activated in C5.9.2)
A3.4	reset counter 3	reset counter? Select: no / yes (available if activated in C5.9.3)

A4 analogue outputs (only for HART®)

A4	analogue outputs	Applicable to all current outputs (terminals A, B and C), frequency outputs (terminals A, B and D), limit switches (terminals A, B, C, and/or D) and the 1st display page / line 1.
A4.1	measurement	1) Select: volume flow / mass flow (**not** valid for PF (partly filled)) / diagnosis value / flow speed / coil temperature / conductivity (**not** valid for PF (partly filled)) and CAP (capacitive)) / level (**only** valid for PF (partly filled))
		2) Use for all outputs? (also use this setting for Fct. A4.2...A4.5!) Setting: no (applies only to the main current output) / yes (applies to all analogue outputs)
A4.2	unit	Selection of the unit from a list, depending on the measurement.
A4.3	range	1) Setting for main current output (range: 0...100%) Setting: 0...x.xx (format and unit, depending on measurement, see A4.1 and A4.2 above)
		2) Use for all outputs? Make setting, see Fct. A4.1 above !
A4.4	low flow cutoff	1) Setting for main current output (sets output value to "0") Setting: x.xxx ± x.xxx% (range: 0.0...20%) (1st value = switching point / 2nd value = hysteresis), condition: 2nd value ≤ 1st value
		2) Use for all outputs? Make setting, see Fct. A4.1 above !
A4.5	time constant	1) Setting for main current output (applicable to all flow measurements) Setting: xxx.x s (range: 000.1...100 s)
		2) Use for all outputs? Make setting, see Fct. A4.1 above !

A4 station address (only for PROFIBUS)

A4	station address	Setting of device address.

A4 slave address (only for MODBUS)

A4	slave address	Setting of device address.

A5 digital outputs (only for HART®)

A5	digital outputs	Valid for all pulse outputs (terminals A, B and/or D) and counter 1.
A5.1	measurement	1) Select measurement: volume flow / mass flow (not valid for PF (partly filled))
		2) Use for all outputs? (also use this setting for Fct. A5.2...A5.4!) Setting: no (only for pulse output D) / yes (for all digital outputs)
A5.2	pulse value unit	Selection of the unit from a list, depending on the measurement.
A5.3	value p. pulse	1) Setting for pulse output D (volume or mass value per pulse) Setting: xxx.xxx in l/s or kg/s
		2) Use for all outputs? Make setting, see Fct. A5.1 above!
A5.4	low flow cutoff	1) Setting for pulse output D (sets output value to "0") (1st value = switching point / 2nd value = hysteresis), condition: 2nd value ≤ 1st value
		2) Use for all outputs? Make setting, see Fct. A5.1 above!

A6 GDC IR interface

A6	GDC IR interface	After this function has been activated an optical GDC adapter can be connected to the LC display. If approximately 60 seconds pass without a connection being established or after the adapter is removed, then the function is exited and the optical keys are active once again.
		Select: break (exit function without connection) /
		activate (the IR interface (adapter) and interrupt the optical keys)

A7 process input

A7.1	device serial no.	Serial no. of the system.
The following process input parameters are only available, if the quick access has been activated in the menu "setup / device / quick setup.		
A7.2	zero calibration	Display of actual zero calibration value.
		Query: calibrate zero?
		Setting: break (return with ↵) / standard (factory setting) / manual (display last value, set new value, range: -1.00…+1 m/s) / range: -1.00…+1 m/s) / automatic (shows the current value as the new zero calibration value)
A7.3	size	Select from size table.
A7.4	GK	Depending on the selection in Fct. A7.4 / A7.5, the Fct. C1.1.0, 5 or 6 appears Set value acc. to nameplate; range: 0.5…12 (20)
A7.5	GKL	
A7.6	coil resistance Rsp	Field coil resistance at 20°C; range: 10.00...220 Ω

A7.7	calib. coil temp.	The coil temperature is derived from the coil resistance at the reference temperature.
		Set coil temperature: break (return with ↵ key) standard (= 20°C) automatic (set current temperature); range: -40.0…+200°C
		Set coil resistance: break (return with ↵ key) standard (= setting of Fct. A7.6) automatic (= calibration with the current resistance)
A7.8	target conduct.	**Not** valid for CAP (capacitive)!
		Reference value for on-site calibration; range: 1.000...50000 µS/cm
		With the PF option (partly filled) this measurement is only used for empty pipe detection (Fct. C1.1.10).
A7.9	EF electr. factor	For calculation of the conductivity based on the electrode impedance (Fct. C1.1.11).
		Select: break (return with ↵ key) / standard (with factory setting) / manual (set desired value) / automatic (determines EF according to the setting in Fct. A7.8 or Fct. C1.1.10)
		With the CAP option (capacitive) and the PF option (partly filled) this measurement is only used to detect empty pipes (Fct. C1.1.10).
A7.10	field frequency	Setting as on measuring sensor nameplate = line frequency x value (from the following list):
		2; 4/3; 2/3; 1/2; 1/4; 1/6; 1/8; 1/12; 1/18; 1/36; 1/50
A7.11	flow direction	Define polarity of flow direction.
		forwards (according to the arrow on the measuring sensor) or backwards (in the opposite direction to the arrow)

6.3.2 Menu B, test

No.	Function	Settings / descriptions

B1 simulation

B1	simulation	Displayed values are simulated.
B1.1	flow speed	Simulation of the flow speed
		Select: break (exit function without simulation) / set value (range: -12…+12 m/s; unit selection in Fct. C5.7.7)
		Query: start simulation? Settings: no (exit function without simulation) / yes (start simulation)
B1.2	volume flow	Volume flow simulation, sequence and settings similar to B1.1, see above!
		X stands for one of the connection terminals A, B, C or D ☐ stands for Fct. no. B1.3...1.6
B1.☐	current out X	simulation X X stands for one of the connection terminals A, B, C or D Sequence and settings similar to B1.1, see above! For pulse output a set number of pulses are output in 1 s!
B1.☐	pulse output X	
B1.☐	frequency out X	
B1.☐	control input X	
B1.☐	limit switch X	
B1.☐	status output X	
B1.☐	current input X	

No.	Function	Settings / descriptions
B3.4	flow fraction	**Only** valid for PF option (partly filled)!
		Simulation of the flow fraction for partly filled pipes. This value is multiplied with the normal flow measurement. 100% relates to fully filled pipes.
		Sequence and settings similar to B1.1, see above!
B1.8	level	**Only** valid for PF option (partly filled)!
		Simulation of the level for partly filled pipes.
		Sequence and settings similar to B1.1, see above!

B2 actual values

B2	actual values	Display the current values; exit the displayed function with key ↵.
B2.1	operating hours	Display the actual operating hours; exit the displayed function with key ↵.
B2.2	act. flow speed	Display the actual flow speed; exit the displayed function with key ↵.
B2.3	act. coil temp.	See also Fct. C1.1.7...C1.1.8
B2.4	electr. temperature	Display the actual electronics temperature; exit the displayed function with key ↵.
B2.5	act. conductivity	See also Fct. C1.3.1...C1.3.2
		With the CAP option (capacitive) and the PF option (partly filled) this measurement is only used for empty pipe detection (Fct. C1.1.10).
B2.6	act. electr. noise	See also Fct. C1.3.13...C1.3.15
B2.7	act. flow profile	**Not** valid for PF option (partly filled)!
		See also Fct. C1.1.10...C1.1.12
B2.8	act. coil resistance	Display the actual resistance of the field coils depending on the current coil temperature.
B2.9	current input A	Displays the active current value.
B2.10	current input B	
B2.11	flow fraction	**Only** valid for PF option (partly filled)!
		Display of the actual flow fraction for partly filled pipes. This value is multiplied with the normal flow measurement. 100% relates to fully filled pipes.
B2.12	level	**Only** valid for PF option (partly filled)!
		Display of the actual level for partly filled pipes.

B3 information

B3	information	-
B3.1	C number	CG number, non-alterable (I/O version)
B3.2	process input	Process input section
		LC display: 1st line: ID No. of the circuit board 2nd line: software version 3rd line: production date
B3.3	SW.REV.MS	Electronics and HART® software.
		LC display: 1st line: ID No. of the circuit board 2nd line: software version 3rd line: production date

No.	Function	Settings / descriptions
B3.4	SW.REV.UIS	User interface
		LC display: 1st line: ID No. of the circuit board 2nd line: software version 3rd line: production date
B3.5	"bus interface"	Only appears with Profibus, Modbus and FF.
		LC display: 1st line: ID No. of the circuit board 2nd line: software version 3rd line: production date
B3.6	Electronic Revision ER	Shows ID no., electronic revision no. and production date; Contains all hardware and software changes.

6.3.3 Menu C, setup

No.	Function	Settings / descriptions

C1 process input

C1.1 calibration

C1.1	calibration	Grouping of all functions related to measuring sensor calibration.
C1.1.1	zero calibration	Display of actual zero calibration value.
		Query: calibrate zero? Setting: break (return with ↵ key) / standard (with factory setting) / manual (display last value, set new value, range: -1.00...+1 m/s) / range: -1.00...+1 m/s) / automatic (shows the current value as the new zero calibration value)
C1.1.2	size	Select from size table.
C1.1.3	GK selection	**Not** valid for PF option (partly filled)!
		Select the field current and the active GKx values; select GK value (see nameplate of the measuring sensor).
		Select: GK & GKL (both values possible / linearity test) / GK (250 mApp) (only GK values possible) / GKL (125 mApp) (only GKL values possible) / GKH (250 mApp) (only GKH values possible)
C1.1.4	GK	Depending on the selection in Fct. C1.1.3, Fct. C1.1.4 appears. Set value acc. to nameplate; range: 0.5...12 (20)
C1.1.5	GKL	**Not** valid for PF option (partly filled)!
		Depending on the selection in Fct. C1.1.3, Fct. C1.1.5 appears. Set value acc. to nameplate; range: 0.5...12 (20)
C1.1.6	GKH	**Not** valid for PF option (partly filled)!
		Depending on the selection in Fct. C1.1.3, Fct. C1.1.6 appears. Set value acc. to nameplate; range: 0.5...12 (20)
C1.1.7	coil resistance Rsp	Field coil resistance at 20°C; range: 10.00...220 Ω

No.	Function	Settings / descriptions
C1.1.8	calib. coil temp.	The coil temperature is derived from the coil resistance at the reference temperature.
		Set coil temperature: break (return with ↵ key) standard (= 20°C) automatic (set current temperature); range: -40.0…+200°C
		Set coil resistance: break (return with ↵ key) standard (= setting of Fct. C1.1.7) automatic (= calibration with the current resistance)
C1.1.9	density	**Not** valid for PF option (partly filled)!
		Calculation of mass flow with constant density of product; range: 0.1…5 kg/l
C1.1.10	target conduct.	Reference value for on-site calibration; range: 1.000...50000 µS/cm
		With the CAP option (capacitive) and the PF option (partly filled) this measurement is only used for empty pipe detection (Fct. C1.1.10).
C1.1.11	EF electr. factor	For calculation of the conductivity based on the electrode impedance.
		Select: break (return with ↵ key) / standard (with factory setting) / manual (set desired value) / automatic (determines EF according to the setting in Fct. C1.1.10)
		With the CAP option (capacitive) and the PF option (partly filled) this measurement is only used for empty pipe detection (Fct. C1.1.10).
C1.1.12	num. of electrodes	Selection see measuring sensor nameplate: 2 electrodes (no full pipe electrode available) / 3 electrodes (with full pipe electrode but no grounding electrode available) / 4 electrodes (full pipe and grounding electrode available)
		Not valid for CAP option (capacitive) and PF option (partly filled)!
C1.1.13	field frequency	Setting as on measuring sensor nameplate = line frequency x value (from the following list):
		2; 4/3; 2/3; ½; 1/4; 1/6; 1/8; 1/12; 1/18; 1/36; 1/50
C1.1.14	select settling	Select settling (special function)
		Select: standard (fixed allocation) / manual (manual time setting for the settling time for the field current)
C1.1.15	settling time	Only when "manual" selected in Fct. C1.1.14; range: 1.0…250 ms
C1.1.16	line frequency	Set line frequency.
		automatic (measuring & setting; for DC systems fixed setting 50 Hz)
		Select: 50 Hz or 60 Hz (fixed setting)
C1.1.17	act. coil resistance	Display of the actual resistance of the field coil for calculation of the temperature.

C1.2 filter

C1.2	filter	Grouping of all functions related to filter of measuring sensor electronics.
C1.2.1	limitation	Limitation of all flow values, before smoothing by time constant, affects all outputs.
		Settings: -xxx.x / +xxx.x m/s; condition: 1st value < 2nd value
		Range 1st value: -100.0 m/s ≤ value ≤ -0.001 m/s
		Range 2nd value: +0.001 m/s ≤ value ≤ +100 m/s
C1.2.2	flow direction	Define polarity of flow direction.
		forwards (according to the arrow on the measuring sensor) or backwards (in the opposite direction to the arrow)
C1.2.3	time constant	For all flow measurements and outputs.
		xxx.x s; range: 0.0…100 s
C1.2.4	pulse filter	Suppresses noise due to solids, air/gas bubbles and sudden changes in pH.
		Select: off (without pulse filter) / on (with old pulse filter) / automatic (with new pulse filter)
		Pulse filter "on": The change from one measurement value to the next one is limited to the value "pulse limitation" for the total time "pulse width". This filter allows a faster signal tracking for slowly changing flow values.
		Pulse filter "automatic": The raw flow values are collected into a buffer, covering two times the "pulse width" values. This filter is called "median" filter. This filter allows a better suppression of pulse shaped disturbances (particles or air bubbles in very noisy environment).
C1.2.5	pulse width	Length of interference and delays to be suppressed on sudden changes in flow.
		Only available, if pulse filter (Fct. C1.2.4) is "on" or "automatic"
		xx.x s; range: 0.01...10 s
C1.2.6	pulse limitation	Dynamic limitation from one measured value to the next; only effective, if pulse filter (Fct. C1.2.4) is "on".
		xx.x s; range: 0.01...100 m/s
C1.2.7	noise filter	Suppresses noise at low conductivity, high solids content, air and gas bubbles, and chemically inhomogeneous media.
		Select: off (without noise filter) / on (with noise filter)
C1.2.8	noise level	Range within which changes are evaluated as noise, and outside of which changes are evaluated as flow (only with noise filter switched on, Fct. C1.2.7).
		xx.xx m/s; range: 0.01...10 m/s
C1.2.9	noise suppression	Set noise suppression (only when noise filter switched on, Fct. C1.2.7).
		Range: 1…10, noise suppression factor [min = 1...max = 10]
C1.2.10	low flow cutoff	Sets output value of all outputs to "0":
		x.xxx ± x.xxx m/s (ft/s); range: 0.0…10 m/s
		(1st value = switching point / 2nd value = hysteresis), condition: 2nd value ≤ 1st value

C1.3 self test

C1.3	self test	Grouping of all functions related to self test of measuring sensor electronics.
C1.3.1	empty pipe detect	**Not** valid for CAP option (capacitive) and PF option (partly filled)!
		Switch conductivity measurement off and on (measurement of the electrode resistance).
		Select: Off (no electrode resistance measurement, conductivity measurement or empty pipe indication) / conductivity (only conductivity measurement) / cond. + empty pipe [F] (conductivity measurement and empty pipe indication, error category [F] application); Flow indication "= 0" when pipe empty / cond. + empty pipe [S] (conductivity measurement and empty pipe indication, error category [S] measurement out of specification); Flow indication "= 0" when pipe empty cond. + empty pipe [I] (conductivity measurement and empty pipe indication, error category [I] information); Flow indication "= 0" when pipe empty
C1.3.1	empty pipe detect	**Only** valid for CAP option (capacitive) and PF option (partly filled)!
		Select: Off (no electrode resistance measurement or empty pipe indication) / empty pipe [F] (empty pipe indication, error category [F] application); Flow indication "= 0" when pipe empty / empty pipe [S] (empty pipe indication, error category [S] measurement outside of specification); Flow indication "= 0" when pipe empty empty pipe [I] (empty pipe indication, error category [I] information); Flow indication "= 0" when pipe empty
C1.3.2	limit empty pipe	Only available when empty pipe activated [..] in Fct. C1.3.1.
		Range: 0.0...9999 µS (set max 50% of the lowest occurring conductivity in operation. Conductivity below this value = signal as empty pipe)
		For the CAP option (capacitive) this value does not indicate fluid conductivity!
C1.3.3	act. conductivity	Only available when empty pipe activated [..] in Fct. C1.3.1.
		Actual conductivity is indicated. Activation takes place only after setting mode is exited!
		For the CAP option (capacitive) a value for empty pipe detection is displayed which does not refer to the fluid conductivity!
C1.3.4	full pipe detect	Only for measuring sensors with 3 (4) electrodes.
		Select: off (no full pipe measurement) / on (full pipe measurement by 3rd electrode)
C1.3.5	limit full pipe	Only when full pipe detection activated, see Fct. C1.3.4.
		Range: 0.0...9999 µS (conductivity over this value = signal as full pipe)
C1.3.6	linearity	**Not** valid for CAP option (capacitive) and PF option (partly filled)!
		Only if GK values "GK+GKL" are activated with Fct. C1.1.3 (check carried out with 2 field currents).
		Select: off (no linearity check) / on (linearity check activated)
C1.3.7	act linearity	**Not** valid for CAP option (capacitive) and PF option (partly filled)!
		Only available when linearity test "on" activated in Fct. C1.3.6. The conductivity measurement must also be activated, see Fct. C1.3.1.
		Activation takes place only after setting mode is exited!
C1.3.8	gain	Automatic test switched off / on. Select: off /on
C1.3.9	coil current	
C1.3.10	flow profile	**Not** valid for CAP option (capacitive) and PF option (partly filled)!
		Automatic test switched off / on. Select: off /on

C1.3.11	limit flow profile	**Not** valid for CAP option (capacitive) and PF option (partly filled)!
		Only with flow profile switched on, see Fct. C1.3.10.
		Range: 0.000…10 (absolute values above this threshold generate an error of category [S])
C1.3.12	act. flow profile	**Not** valid for CAP option (capacitive) and PF option (partly filled)!
		Only available when flow profile "on" activated in Fct. C1.3.10. Activation takes place only after setting mode is exited!
C1.3.13	electrode noise	Automatic test switched off / on. Select: off /on
C1.3.14	limit electr. noise	Only with electrode noise activated, see Fct. C1.3.13.
		Range: 0.000…12 m/s (noise above this threshold generates an error of category [S])
C1.3.15	act. electr. noise	Only available when electrode noise "on" activated in Fct. C1.3.13. Activation takes place only after setting mode is exited!
C1.3.16	settling of field	Automatic test switched off / on. Select: off /on
C1.3.17	diagnosis value	**Not** valid for CAP option (capacitive) and PF option (partly filled)!
		Select diagnosis value for testing the various analogue outputs.
		Select: off (no diagnosis) / electrode noise (activate Fct. C1.3.13) / flow profile (activate Fct. C1.3.10) / linearity (activate Fct. C1.3.6) / terminal 2 DC (electrode DC voltage) / terminal 3 DC (electrode DC voltage)
C1.3.17	diagnosis value	**Only** valid for CAP option (capacitive)!
		Select diagnosis value for testing the various analogue outputs.
		Select: off (no diagnosis) / electrode noise (activate Fct. C1.3.13)
C1.3.17	diagnosis value	**Only** valid for PF option (partly filled)!
		Select diagnosis value for testing the various analogue outputs.
		Select: off (no diagnosis) / electrode noise (activate Fct. C1.3.13) / terminal 2 DC (electrode DC voltage) / terminal 3 DC (electrode DC voltage)

C1.4 information

C1.4	information	Grouping of all functions related to information with respect to measuring sensor and sensor electronics.
C1.4.1	liner	Shows material of the liner.
C1.4.2	electr. material	Shows material of the electrodes.
C1.4.3	calibration date	Not available at this time.
C1.4.4	serial no. sensor	Shows serial no. of the measuring sensor.
C1.4.5	V no. sensor	Shows the order number of the measuring sensor.
C1.4.6	sensor electr. info	Sows serial number of circuit board, software version number and calibration date of circuit board
C1.4.7	option PF info	**Only** valid for PF option (partly filled)!
		Shows serial number of circuit board, software version number and calibration date of circuit board for partly filled pipes

C1.5 simulation

C1.5	simulation	Grouping of all functions for simulating measuring sensor values. These simulations have effect on all outputs, including counters and display.
C1.5.1	flow speed	Sequence see Fct. B1.1
C1.5.2	volume flow	Sequence see Fct. B1.2
C1.5.3	flow fraction	**Only** valid for PF option (partly filled)!
		Sequence see Fct. B1.3
C1.5.4	level	**Only** valid for PF option (partly filled)!
		Sequence see Fct. B1.4

No.	Function	Settings / descriptions

C2 I/O (Inputs/Outputs)

C2.1 hardware

C2.1	hardware	Assignment of connection terminals dependent on signal converter version: active / passive / NAMUR
C2.1.1	terminal A	Select: off (switched off) / current output / frequency output / pulse output / status output / limit switch / control input / current input
C2.1.2	terminal B	Select: off (switched off) / current output / frequency output / pulse output / status output / limit switch / control input / current input
C2.1.3	terminal C	Select: off (switched off) / current output / status output / limit switch
C2.1.4	terminal D	Select: off (switched off) / frequency output / pulse output / status output / limit switch

C2.☐ current out X

C2.☐	current out X	X stands for one of the connection terminals A, B or C ☐ stands for Fct. no. C2.2 (A) / C2.3 (B) / C2.4 (C)
C2.☐.1	range 0%…100%	Current range for the selected measurement, e.g. 4...20 mA, corresponds to 0…100%
		xx.x … xx.x mA; range: 0.00…20 mA (condition: 0 mA ≤ 1st value ≤ 2nd value ≤ 20 mA)
C2.☐.2	extended range	Defines the min. and max. limits.
		xx.x … xx.x mA; range: 03.5…21.5 mA (condition: 0 mA ≤ 1st value ≤ 2nd value ≤ 21.5 mA)
C2.☐.3	error current	Specify error current.
		xx.x mA; range: 3…22 mA (condition: outside of extended range)
C2.☐.4	error condition	The following error conditions can be selected.
		Select: error in device (error category [F]) / application error (error category [F]) / out of specification (error category [S])
C2.☐.5	measurement	Measurements for activating the output.
		Select: volume flow / mass flow (**not** valid for PF (partly filled)) / diagnosis value / flow speed / coil temperature / conductivity (**not** valid for PF (partly filled)) and CAP (capacitive)) / level (**only** valid for PF (partly filled))
C2.☐.6	range	0…100% of the measurement set in Fct. C2.☐.5
		0…xx.xx _ _ _ (format and unit depend on the measurement, see above)
C2.☐.7	polarity	Set polarity, please note flow direction in C1.2.2!
		Select: both polarities (plus and minus values are displayed) / positive polarity (display for negative values = 0) / negative polarity (display for positive values = 0) / absolute value (use for the output)
C2.☐.8	limitation	Limitation before applying the time constant.
		±xxx … ±xxx%; range: -150…+150%
C2.☐.9	low flow cutoff	Sets output value to "0"
		x.xxx ± x.xxx%; range: 0.0…20%
		(1st value = switching point / 2nd value = hysteresis), condition: 2nd value ≤ 1st value
C2.☐.10	time constant	Range: 000.1…100 s
C2.☐.11	special function	Select: off (switched off) / automatic range (range is changed automatically, extended lower range, only makes sense together with a status output) / external range (change by control input, extended lower range, control input must also be activated)
C2.☐.12	threshold	Appears only when Fct. C2.☐.11 threshold is activated between extended and normal range. The automatic range function always changes from the extended to the normal range when the 100% current is reached.
		The upper 100% value of the hysteresis is then = 0. The threshold is then the hysteresis value, instead of "threshold ± hysteresis" as shown in the display.
		Range: 5.0…80%
		(1st value = switching point / 2nd value = hysteresis), condition: 2nd value ≤ 1st value
C2.☐.13	information	Serial no. of the I/O board, software version no. and production date of the circuit board
C2.☐.14	simulation	Sequence see B1.☐ current out X

C2.☐.15	4mA trimming	Trimming of the current at 4 mA
		Reset to 4 mA restores the factory calibration.
		Used for HART® setting.
C2.☐.16	20mA trimming	Trimming of the current at 20 mA
		Reset to 20 mA restores the factory calibration.
		Used for HART® setting.

C2.☐ frequency out X

C2.☐	frequency out X	X stands for one of the connection terminals A, B or D ☐ stands for Fct. no. C2.2 (A) / C2.3 (B) / C2.5 (D)
C2.☐.1	pulse shape	Specify the pulse shape.
		Select: symmetric (about 50% on and 50% off) / automatic (constant pulse with about 50% on and 50% off at 100% pulse rate) / fixed (fixed pulse rate, setting see below Fct. C2.☐.3 100% pulse rate)
C2.☐.2	pulse width	Only available if set to "fixed" in Fct. C2.☐.1
		Range: 0.05…2000 ms
		Note: max. setting value Tp [ms] ≤ 500 / max. pulse rate [1/s], gives the pulse width = time where the output is activated
C2.☐.3	100% pulse rate	Pulse rate for 100% of the measuring range.
		Range: 0.0…10000 1/s
		Limitation 100% pulse rate ≤ 100/s: I_{max} ≤ 100 mA Limitation 100% pulse rate > 100/s: I_{max} ≤ 20 mA
C2.☐.4	measurement	Measurements for activating the output.
		Select: volume flow / mass flow (**not** valid for PF (partly filled)) / diagnosis value / flow speed / coil temperature / conductivity (**not** valid for PF (partly filled)) and CAP (capacitive)) / level (**only** valid for PF (partly filled))
C2.☐.5	range	0…100% of the measurement set in Fct. C2.☐.4
		0…xx.xx _ _ _ (format and unit depend on the measurement, see above)
C2.☐.6	polarity	Set polarity, please note flow direction in C1.2.2!
		Select: both polarities (plus and minus values are displayed) / positive polarity (display for negative values = 0) / negative polarity (display for positive values = 0) / absolute value (use for the output)
C2.☐.7	limitation	Limitation before applying the time constant.
		±xxx … ±xxx%; range: -150…+150%
C2.☐.8	low flow cutoff	Sets output value to "0":
		x.xxx ± x.xxx%; range: 0.0…20%
		(1st value = switching point / 2nd value = hysteresis), condition: 2nd value ≤ 1st value
C2.☐.9	time constant	Range: 000.1…100 s
C2.☐.10	invert signal	Select: off (activated output generates a high current at the output, switch closed) / on (activated output generates a low current at the output, switch open)
C2.☐.11	phase shift w.r.t. B	Only available when configuring the A or D terminal and only if output B is a pulse or frequency output. If setting in Fct. 2.5.6 is "Both polarities", the phase shift is prefixed by a symbol, e.g. -90° and +90°
		Select: off (no phase shift) / 0° phase shift (between outputs A or D and B, inversion possible) / 90° phase shift (between outputs A or D and B, inversion possible) / 180° phase shift (between outputs A or D and B, inversion possible)

C2.3.11	special functions	This function is only available at the terminal B frequency output. At the same time, 2 frequency outputs must be available: 1st output at terminal A or D / 2nd output at terminal B
		The B output is operated as a slave output, controlled and set using master output A or D
		Selection: off (no phase shift) / phase shift w.r.t. D or A (slave output is B and master output is D or A)
C2.☐.12	information	Serial no. of the I/O board, software version no. and production date of the circuit board
C2.☐.13	simulation	Sequence see B1.☐ frequency out X

C2.☐ pulse output X

C2.☐	pulse output X	X stands for one of the connection terminals A, B or D ☐ stands for Fct. no. C2.2 (A) / C2.3 (B) / C2.5 (D)
C2.☐.1	pulse shape	Specify the pulse shape.
		Select: symmetric (about 50% on and 50% off) / automatic (constant pulse with about 50% on and 50% off at 100% pulse rate) / fixed (fixed pulse rate, setting see below Fct. C2.☐.3 100% pulse rate)
C2.☐.2	pulse width	Only available if set to "fixed" in Fct. C2.☐.1
		Range: 0.05…2000 ms
		Note: max. setting value Tp [ms] ≤ 500 / max. pulse rate [1/s], gives the pulse width = time where the output is activated
C2.☐.3	max. pulse rate	Pulse rate for 100% of the measuring range.
		Range: 0.0…10000 1/s
		Limitation 100% pulse rate ≤ 100/s: I_{max} ≤ 100 mA Limitation 100% pulse rate > 100/s: I_{max} ≤ 20 mA
C2.☐.4	measurement	Measurements for activating the output.
		Select: volume flow / mass flow (**not** valid for PF (partly filled))
C2.☐.5	pulse value unit	Selection of the unit from a list, depending on the measurement.
C2.☐.6	value p. pulse	Set value for volume or mass per pulse.
		xxx.xxx, range in [l] or [kg] (volume or mass for current output C2.☐.6)
		At max. pulse rate see above C2.☐.3 pulse output.
C2.☐.7	polarity	Set polarity, please note flow direction in C1.2.2!
		Select: both polarities (plus and minus values are displayed) / positive polarity (display for negative values = 0) / negative polarity (display for positive values = 0) / absolute value (use for the output)
C2.☐.8	low flow cutoff	Sets output value to "0"
		(1st value = switching point / 2nd value = hysteresis), condition: 2nd value ≤ 1st value
C2.☐.9	time constant	Range: 000.1…100 s
C2.☐.10	invert signal	Select: off (activated output generates a high current at the output, switch closed) / on (activated output generates a low current at the output, switch open)
C2.☐.11	phase shift w.r.t. B	Only available when configuring the A or D terminal and only if output B is a pulse or frequency output. If setting in Fct. 2.5.6 is "Both polarities", the phase shift is prefixed by a symbol, e.g. -90° and +90°
		Select: off (no phase shift) / 0° phase shift (between outputs A or D and B, inversion possible) / 90° phase shift (between outputs A or D and B, inversion possible) / 180° phase shift (between outputs A or D and B, inversion possible)

C2.3.11	special functions	This function is only available at the pulse output of terminal B. At the same time, 2 pulse outputs must be available: 1st output at terminal A or D / 2nd output at terminal B
		The B output is operated as a slave output, controlled and set using master output A or D
		Selection: off (no phase shift) / phase shift w.r.t. D or A (slave output is B and master output is D or A)
C2.☐.12	information	Serial no. of the I/O board, software version no. and production date of the circuit board
C2.☐.13	simulation	Sequence see B1.☐ pulse output X

C2.☐ status output X

C2.☐	status output X	X (Y) stands for one of the connection terminals A, B, C or D ☐ stands for Fct. no. C2.2 (A) / C2.3 (B) / C2.4 (C) / C2.5 (D)
C2.☐.1	mode	The output shows the following measuring conditions:
		out of specification (output activated, signals application error or error in device refer to *Status messages and diagnostic information* on page 135 / application error (output activated, signals application error or error in device refer to *Status messages and diagnostic information* on page 135 / polarity flow (polarity of the current flow) / over range flow (over range of the flow) / counter 1 preset (activates when counter X preset value is reached) / counter 2 preset (activates when counter X preset value is reached) / counter 3 preset (activates when counter X preset value is reached) / output A (activated by the status of output Y, additional output data see below) / output B (activated by the status of output Y, additional output data see below) / output C (activated by the status of output Y, additional output data see below) / output D (activated by the status of output Y, additional output data see below) / off (switched off) / empty pipe (when pipe empty, output activated) (contains the low-level detection for PF option (partly filled)) / error in device (when error, output activated)
C2.☐.2	current out Y	Only appears if output A...C is set under "mode (see above)", and this output is a "current output".
		Select: polarity (is signalled) / over range (is signalled) / automatic range signals lower range
C2.☐.2	frequency out Y and pulse output Y	Only appears if output A, B or D is set under "mode (see above)", and this output is a "frequency/pulse output".
		Select: polarity (is signalled) / over range (is signalled)
C2.☐.2	status output Y	Only appears if output A...D is set under "mode (see above)", and this output is a "status output".
		Same signal (like other connected status output, signal can be inverted, see below)
C2.☐.2	limit switch Y and control input Y	Only appears if output A...D / input A or B is set under "mode (see above)", and this output / input is a "limit switch / control input".
		Status off (is always selected here if status output X is connected with a limit switch / control input Y.
C2.☐.2	off	Only appears if output A...D is set under "mode (see above)" and this output is switched off.
C2.☐.3	invert signal	Select: off (activated output supplies a high current, switch closed) / on (activated output supplies a low current, switch open)
C2.☐.4	information	Serial no. of the I/O board, software version no. and production date of the circuit board
C2.☐.5	simulation	Sequence see B1.☐ status output X

C2.☐ limit switch X

C2.☐	limit switch X	X stands for one of the connection terminals A, B, C or D ☐ stands for Fct. no. C2.2 (A) / C2.3 (B) / C2.4 (C) / C2.5 (D)
C2.☐.1	measurement	Select: volume flow / mass flow (**not** valid for PF (partly filled)) / diagnosis value / flow speed / coil temperature / conductivity (**not** valid for PF (partly filled)) and CAP (capacitive)) / level (**only** valid for PF (partly filled))
C2.☐.2	threshold	Switching level, set threshold with hysteresis
		xxx.x ±x.xxx (format and unit depend on the measurement, see above)
		(1st value = threshold / 2nd value = hysteresis), condition: 2nd value ≤ 1st value
C2.☐.3	polarity	Set polarity, please note flow direction in C1.2.2!
		Select: both polarities (plus and minus values are displayed) / positive polarity (display for negative values = 0) / negative polarity (display for positive values = 0) / absolute value (use for the output)
C2.☐.4	time constant	Range: 000.1…100 s
C2.☐.5	invert signal	Select: off (activated output generates a high current, switch closed) / on (activated output generates a low current, switch open)
C2.☐.6	information	Serial no. of the I/O board, software version no. and production date of the circuit board
C2.☐.7	simulation	Sequence see B1.☐ limit switch X

C2.☐ control input X

C2.☐	control input X	X stands for connection terminal A or B ☐ stands for Fct. no. C2.2 (A) / C2.3 (B)
C2.☐.1	mode	off (control input switched off) / hold all outputs (hold current values, not display and counters) / output Y (hold current values) / all outputs to zero (current values = 0%, not display and counters) / output Y to zero (current value = 0%) / all counters (reset all counters to "0") / counter "Z" reset (set counter 1, (2 or 3) to "0") / stop all counters / stop counter "Z" (stops counter 1, (2 or 3) / zero outp.+stop Cnt. (all outputs 0%, stop all counters, not the display) / external range Y (control input for external range of current output Y) - also make this setting on current output Y (no check if current output Y is available) / error reset (all resettable errors are deleted)
C2.☐.2	invert signal	Select: off (control input is activated when a current is applied at the input by voltage to passive inputs or a low-value resistor to active inputs) / on (control input is activated when no current is applied at the input, low voltage to passive inputs or a high-value resistor to active inputs)
C2.☐.3	information	Serial no. of the I/O board, software version no. and production date of the circuit board
C2.☐.4	simulation	Sequence see B 1.☐ control input X

C2.☐ current input X

C2.☐	current input X	X stands for connection terminal A or B ☐ stands for Fct. no. C2.2 (A) / C2.3 (B)
C2.☐.1	range 0%…100%	Fixed current range (4...20 mA) for the assigned value range; The range indicated cannot be changed.
C2.☐.2	extended range	Adjustable, extended, linear range goes from 3.6...21.0 mA; Error ranges: 0.5...<3.6 mA / >21.0...23.0 mA / <0.5 mA open circuit / >23.0 closed circuit
C2.☐.3	measurement	The connected sensor delivers the values to the current input; possible values: temperature, pressure or current
C2.☐.4	range	Measuring range from 0...100% in the corresponding unit.
C2.☐.5	time constant	Range: 000.1…100 s
C2.☐.6	information	Serial no. of the I/O board, software version no. and production date of the circuit board
C2.☐.7	simulation	Sequence see B 1.☐ current input X
C2.☐.8	4mA trimming	Trimming of the current at 4 mA
		Reset to 4 mA restores the factory calibration.
C2.☐.9	20mA trimming	Trimming of the current at 20 mA
		Reset to 20 mA restores the factory calibration.

No.	Function	Settings / descriptions

C3 I/O counter

C3.1	counter 1	Set function of counter ☐ ☐ stands for 1, 2, 3 (= counter 1, 2, 3) The basic version (standard) has only 2 counters! These functions are only available for HART® devices.
C3.2	counter 2	
C3.3	counter 3	
C3.☐.1	function	Select: sum counter (counts positive and negative values) / +counter (counts only the positive values) / -counter (counts only the negative values) / off (counter is switched off)
C3.☐.2	measurement	Selection of the measurement for counter ☐
		Select: volume flow / mass flow (**not** valid for PF (partly filled))Select: volume flow / mass flow
C3.☐.3	low flow cutoff	Sets output value to "0"
		(1st value = switching point / 2nd value = hysteresis), condition: 2nd value ≤ 1st value
C3.☐.4	time constant	Range: 000.1…100 s
C3.☐.5	preset value	If this value is reached, positive or negative, a signal is generated that can be used for a status output at which "preset counter X" has to be set.
		Preset value (max. 8 digits) x.xxxxx in selected unit, see C5.7.10 + 13
C3.☐.6	reset counter	Sequence see Fct. A3.2, A3.3 and A3.4
C3.☐.7	set counter	Set counter ☐ to the desired value.
		Select: break (exit function) / set value (opens the editor to make the entry)
		Query: set counter?
		Select: no (exit function without setting the value) / yes (sets the counter and exits the function)
C3.☐.8	stop counter	Counter ☐ stops and holds the current value.
		Select: no (exits the function without stopping the counter) / yes (stops the counter and exits the function)
C3.☐.9	start counter	Start counter ☐ after that counter is stopped.
		Select: no (exits the function without starting the counter) / yes (starts the counter and exits the function)
C3.☐.10	information	Serial no. of the I/O board, software version no. and production date of the circuit board

No.	Function	Settings / descriptions

C4 I/O HART

C4	I/O HART	Selection / display of the 4 dynamic variables (DV) for HART®.
		The HART® current output (terminal A basic I/Os or terminal C modular I/Os) always has a fixed link to the primary variables (PV). Fixed links of the other DVs (1-3) are only possible if additional analogue outputs (current and frequency) are available; if not, the measurement can be freely selected from the following list: in Fct. A4.1 "measurement".
		☐ stands for 1, 2, 3 or 4 X stands for connection terminals A...D
C4.1	PV is	Current output (primary variable)
C4.2	SV is	(secondary variable)
C4.3	TV is	(tertiary variable)
C4.4	4V is	(4th variable)
C4.5	HART units	Changes units of DVs (dynamic variables) in the display
		Break: return with ↵ key
		HART display®: copies the settings for the display units to the settings for DVs
		Standard: sets factory defaults for DVs
C4.☐.1	current out X	Shows the current analogue measured value of the linked current output. The measurement cannot be changed!
C4.☐.1	frequency out X	Shows the current analogue measured value of the linked frequency output, if present. The measurement cannot be changed!
C4.☐.1	HART dynamic var.	Measurements of the dynamic variables for HART®.
		Linear measurements: volume flow / mass flow (**not** valid for PF (partly filled)) / diagnosis value / flow speed / coil temperature / conductivity (**not** valid for PF (partly filled) and CAP (capacitive)) / level (**only** valid for PF (partly filled))
		Digital measurements: counter 1 / counter 2 / counter 3 / operating hours

No.	Function	Settings / descriptions

C5 device

C5.1 device info

C5.1	device info	Grouping of all functions that have no direct effect on the measurement or any output.
C5.1.1	Tag	Settable characters (max. 8 digits): A...Z; a...z; 0...9; / - , .
C5.1.2	C number	CG number, non-alterable (input/output versions)
C5.1.3	device serial no.	Serial no. of the system.
C5.1.4	electronic serial no.	Serial no. of the electronic assembly, cannot be changed.
C5.1.5	SW.REV.MS	Serial no. of the circuit board, version no. of the main software, production date of the circuit board
C5.1.6	Electronic Revision ER	Reference identification number, electronic revision and production date of the device; includes all hardware and software changes

C5.2 display

C5.2	display	-
C5.2.1	language	Language selection depends on the device version.
C5.2.2	contrast	Adjust display contrast for extreme temperatures. Setting: -9…0…+9
		This change takes place immediately, not just when setting mode is exited!
C5.2.3	default display	Specification of the default display page that is returned to after a short delay period.
		Select: none (the current page is always active) / 1. meas. page (show this page) / 2. meas. page (show this page) / status page (show only status messages) / graphic page (trend display of the 1st measurement)
C5.2.4	self test	Not available at this time.
C5.2.5	SW.REV.UIS	Serial no. of the circuit board, version no. of user software, production date of the circuit board

C5.3 and C5.4 1. meas. page and 2. meas. page

C5.3	1. meas. page	☐ stands for 3 = meas. page 1 and 4 = meas. page 2
C5.4	2. meas. page	
C5.☐.1	function	Specify number of measured value lines (font size)
		Select: one line / two lines / three lines
C5.☐.2	measurement 1.line	Specify measurement for 1st line.
		Select: volume flow / mass flow (**not** valid for PF (partly filled)) / diagnosis value / flow speed / coil temperature / conductivity (**not** valid for PF (partly filled)) and CAP (capacitive)) / level (**only** valid for PF (partly filled))
C5.☐.3	range	0…100% of the measurement set in Fct. C5.☐.2
		0…xx.xx _ _ _ (format and unit depend on the measurement)
C5.☐.4	limitation	Limitation before applying the time constant.
		xxx%; range: -120…+120%
C5.☐.5	low flow cutoff	Sets output value to "0"
		(1st value = switching point / 2nd value = hysteresis), condition: 2nd value ≤ 1st value
C5.☐.6	time constant	Range: 000.1…100 s
C5.☐.7	format 1.line	Specify decimal places.
		Select: automatic (adaptation carried out automatically) / X (= none) …X.XXXXXXXX (max. 8 digits)
C5.☐.8	measurement 2.line	Specify measurement 2.line (only available if this 2.line is activated)
		Select: bar graph (for the measurement selected in the first line) / volume flow / mass flow (**not** valid for PF (partly filled)) / diagnosis value / flow speed / counter 1 / counter 2 / counter 3 / conductivity (**not** valid for PF (partly filled) and CAP (capacitive)) / coil temperature / operating hours / level (**only** valid for PF (partly filled))
C5.☐.9	format 2.line	Specify decimal places.
		Select: automatic (adaptation carried out automatically) / X (= none) …X.XXXXXXXX (max. 8 digits)
C5.☐.10	measurement 3.line	Specify measurement 3.line (only available if this 3.line is activated)
		Select: volume flow / mass flow (**not** valid for PF (partly filled)) / diagnosis value / flow speed / coil temperature / conductivity (**not** valid for PF (partly filled) and CAP (capacitive)) / counter 1 / counter 2 / counter 3 / operating hours / level (**only** valid for PF (partly filled)) / current input A / current input B

C5.□.11	format 3.line	Specify decimal places.
		Select: automatic (adaptation carried out automatically) / X (= none) ...X.XXXXXXXX (max. 8 digits)

C5.5 graphic page

C5.5	graphic page	Graphic page always shows trend curve of the measurement of the 1. meas. page / 1.line, see Fct. C5.3.2
C5.5.1	select range	Select: manual (set range in Fct. C5.5.2) / automatic (automatic depiction based on the measured values) Reset only after parameter change or after switching off and on.
C5.5.2	range	Set the scaling for the Y axis. Only available if "manual" is set in C5.5.1.
		+xxx ±xxx%; range: -100...+100%
		(1st value = lower limit / 2nd value = upper limit), condition: 1st value ≤ 2nd value
C5.5.3	time scale	Set the time scaling for the X axis, trend curve
		xxx min; range: 0...100 min

C5.6 special functions

C5.6	special functions	-
C5.6.1	reset errors	reset errors?
		Select: no/yes
C5.6.2	save settings	Save current settings. Select: break (exit function without saving) / backup 1 (save in storage location 1) / backup 2 (save in storage location 2)
		Query: continue copy? (cannot be done afterwards) Select: no (exit function without saving) / yes (copy current settings to storage backup 1 or backup 2)
C5.6.3	load settings	Load saved settings. Select: break (exit function without loading) / factory settings (load in state as delivered) / backup 1 (load data from storage location 1) / backup 2 (load data from storage location 2) / load sensor data (factory settings of calibration data)
		Query: continue copy? (cannot be done afterwards) Select: no (exit the function without saving) / yes (load data from the selected storage location)
C5.6.4	password quick set	Password required to change data in the quick setup menu.
		0000 (= to Quick Setup menu without password)
		xxxx (password required); range 4digit: 0001...9999
C5.6.5	password setup	Password required to change data in the setup menu.
		0000 (= to Quick Setup menu without password)
		xxxx (password required); range 4digit: 0001...9999
C5.6.6	GDC IR interface	After this function has been activated an optical GDC adapter can be connected to the LC display. If approximately 60 seconds pass without a connection being established or after the adapter is removed, then the function is exited and the optical keys are active once again.
		Select: break (exit function without connection) / activate (the IR interface (adapter) and interrupt the optical keys)

C5.7 units

C5.7	units	-
C5.7.1	volume flow	m^3/h; m^3/min; m^3/s; l/h; l/min; l/s (l = litres); ft^3/h; ft^3/min; ft^3/s; gal/h; gal/min; gal/s; IG/h; IG/min; IG/s; cf/h; cf/min; cf/s; free unit (set factor and text in the next two functions, sequence see below)
C5.7.2	Text free unit	For text to be specified refer to *Set free units* on page 133:
C5.7.3	[m^3/s]*factor	Specification of the conversion factor, based on m^3/s:
		xxx.xxx refer to *Set free units* on page 133
C5.7.4	mass flow	kg/s; kg/min; kg/h; t/min; t/h; g/s; g/min; g/h; lb/s; lb/min; lb/h; ST/min; ST/h (ST = Short Ton); LT/h (LT = Long Ton); free unit (set factor and text in the next two functions, sequence see below)
C5.7.5	Text free unit	For text to be specified refer to *Set free units* on page 133:
C5.7.6	[kg/s]*factor	Specification of the conversion factor, based on kg/s:
		xxx.xxx refer to *Set free units* on page 133
C5.7.7	flow speed	m/s; ft/s
C5.7.8	conductivity	µS/cm; S/cm
C5.7.9	temperature	°C; °F; K
C5.7.10	volume	m^3; l (Liter); hl; ml; gal; IG; in^3; ft^3; yd^3; cf; free unit (set factor and text in the next two functions, sequence see below)
C5.7.11	Text free unit	For text to be specified refer to *Set free units* on page 133:
C5.7.12	[m^3]*factor	Specification of the conversion factor, based on m^3:
		xxx.xxx refer to *Set free units* on page 133
C5.7.13	mass	kg; t; mg; g; lb; ST; LT; oz; free unit (set factor and text in the next two functions, sequence see below)
C5.7.14	Text free unit	For text to be specified refer to *Set free units* on page 133:
C5.7.15	[kg]*factor	Specification of the conversion factor, based on kg:
		xxx.xxx refer to *Set free units* on page 133
C5.7.16	density	kg/l; kg/m^3; lb/cf; lb/gal; free unit (set factor and text in the next two functions, sequence see below)
C5.7.17	Text free unit	For text to be specified refer to *Set free units* on page 133:
C5.7.18	[kg/m^3]*factor	Specification of the conversion factor, based on kg/m^3:
		xxx.xxx refer to *Set free units* on page 133
C5.7.19	pressure	Pa; kPa; bar; mbar; psi (no free units possible); only if current input available.

C5.8 HART

C5.8	HART	This function is only available for devices with a HART® interface!
C5.8.1	HART	Switch HART® communication on/off:
		Select: on (HART® active) current = 4…20 mA / off (HART® not active) current = 0…20 mA
C5.8.2	address	Set address for HART® operation.
		Select: 00 (point-to-point operation, current output has normal function, current = 4…20 mA) / 01…15 (Multi-Drop operation, current output has a constant setting of 4 mA)
C5.8.3	message	Set required text:
		A…Z ; a…z ; 0…9 ; / - + , . *
C5.8.4	description	Set required text:
		A…Z ; a…z ; 0…9 ; / - + , . *

C5.9 quick setup

C5.9	quick setup	Activate quick access in quick setup menu; default setting: quick setup is active (yes)
		Select: yes (switched on) / no (switched off)
C5.9.1	reset counter 1	Reset counter 1 in quick setup menu?
		Select: yes (activated) / no (switched off)
C5.9.2	reset counter 2	Reset counter 2 in quick setup menu?
		Select: yes (activated) / no (switched off)
C5.9.3	reset counter 3	Reset counter 3 in quick setup menu?
		Select: yes (activated) / no (switched off)
C5.9.4	process input	Activate quick access to the important process input parameters
		Select: yes (activated) / no (not activated)

6.3.4 Set free units

Free units	Sequences to set texts and factors
Texts	
Volume flow, mass flow and density:	3 digits before and after the slash xxx/xxx (max. 3 digits before / after the slash)
Volume, mass:	xxx (max. 3 digits)
Permissible characters:	A…Z ; a…z ; 0…9 ; / - + , .*; @ $ % ~ () [] _
Conversion factors	
Desired unit	= [unit see above] * conversion factor
Conversion factor	Max. 9 digits
Shift decimal point:	↑ to the left and ↓ to the right

6.4 Description of functions

6.4.1 Reset counter in the menu "quick setup"

INFORMATION!
It may be necessary to activate resetting of the counter in the menu "quick setup".

Key	Display	Description and setting
>	quick setup	Press and hold for 2.5 s, then release the key.
>	language	-
2 x ↓	reset	-
>	reset errors	-
↓	counter 1	Select desired counter. (Counter 3 is optional)
↓	counter 2	
↓	counter 3	
>	reset counter no	-
↓ or ↑	reset counter yes	-
↵	counter 1,2 (or 3)	Counter has been reset.
3 x ↵	Measuring mode	-

6.4.2 Deleting error messages in the menu "quick setup"

INFORMATION!
For the detailed list of the possible error messages refer to Status messages and diagnostic information on page 135.

Key	Display	Description and setting
>	quick setup	Press and hold for 2.5 s, then release the key.
>	language	-
2 x ↓	reset	-
>	reset errors	-
>	reset? no	-
↓ or ↑	reset? yes	-
↵	reset errors	Error has been reset.
3 x ↵	Measuring mode	-

6.5 Status messages and diagnostic information

Operational faults in device

Messages on the display	Description	Actions
Status: F _ _ _ _ _	**Operational fault in device, mA output ≤ 3.6 mA or set fault current (depending on the seriousness of the fault), status output open, pulse / frequency output: no pulses**	**Repair necessary.**
F error in device	Fault or failure of device. Parameter or hardware error. No measurement possible.	Group message, when one of the following or some other severe error occurs.
F IO 1	Error, operational fault in IO 1. Parameter or hardware error. No measurement possible.	Load settings (Fct. C4.6.3) (backup 1, backup 2 or factory settings). If status message still does not disappear, replace electronic unit.
F parameter	Error, operational fault of data manager, electronic unit, parameter or hardware error. Parameters no longer usable.	
F IO 2	Error, operational fault in IO 2. Parameter or hardware error. No measurement possible.	
F configuration (also when changing modules)	Invalid configuration: display software, bus parameter or main software do not match existing configuration. This error also occurs when a module has been added or removed without confirming the configuration change.	After module change, confirm query for changed configuration. If device configuration unchanged: defective, replace electronic unit.
F display	Error, operational fault in display. Parameter or hardware error. No measurement possible.	Defective, replace electronic unit.
F sensor electronic	Error, operational fault in sensor electronics. Parameter or hardware error. No measurement possible.	Defective, replace electronic unit.
F sensor global	Data error in the global data of the measuring sensor electronic equipment.	Load settings (Fct. C5.6.3) (backup 1, backup 2 or factory settings). If status message still does not disappear, replace electronic unit.
F sensor local	Data error in the local data of the measuring sensor electronic equipment.	Defective, replace electronic unit.
F field current local	Data error in the local data of the field current supply	Defective, replace electronic unit.
F current in-/output A	Error, operational fault in current output or output for terminals A/B. Parameter or hardware error. No measurement possible.	Defective, replace electronic unit or input/output module (I/O module).
F current in-/output B		
F current output C	Error, operational fault in current output for terminal C. Parameter or hardware error. Measurement not possible.	Defective, replace electronic unit or output module (I/O module).
F software user interface	Fault revealed by CRC check of operation software.	Replace electronic unit.
F hardware settings (also when changing modules)	The set hardware parameters do not match the identified hardware. A dialogue appears in the display.	Answer queries in dialogue mode, follow directions. After module change, confirm query for changed configuration. If device configuration unchanged: defective, replace electronic unit.
F hardware detection	Existing hardware cannot be identified. Defective or unknown modules.	Replace electronic unit.

Messages on the display	Description	Actions
Status: F _ _ _ _ _	**Operational fault in device, mA output ≤ 3.6 mA or set fault current (depending on the seriousness of the fault), status output open, pulse / frequency output: no pulses**	**Repair necessary.**
F RAM/ROM error IO1	A RAM or ROM error is detected during the CRC check.	Defective, replace electronic unit or input/output module (I/O module).
F RAM/ROM error IO2		
F Fieldbus	Malfunction of the Fieldbus, Profibus or FF interface.	-
	Modbus or Ethernet interface malfunction (can also appear with some Profibus or FF errors).	-
F PF sensor error	Malfunction reported by the level sensor.	-
F PF sens. communication	Communication error to the level sensor. Either the connection is interrupted or the measuring sensor is not powered up.	-

Application error

Messages on the display	Description	Actions
Status: F _ _ _ _ _	**Application fault, device OK, but measured values affected.**	**Application test or operator action necessary.**
F application error	Application-dependent fault, but device is OK.	Group message, when errors as described below or other application errors occur.
F empty pipe	1 or 2 measuring electrodes are not in contact with the medium; measured value is set to zero. No measurement possible.	Measuring pipe not filled; function dependent on Fct. C1.3.2.; Check installation. Or electrodes completely insulated e.g. by oil film. Clean!
	The two empty pipe messages cannot appear at the same time. The difference lies in whether the measured value is also set to zero upon the detection of an empty pipe. The sensor electronics will use one or the other function (setting to zero or further measurement) depending on a selection made by the user.	
F flow exceeding limit	Measuring range exceeded, filter setting limits measured values. No message if empty pipe.	Limitation Fct. C1.2.1, increase values.
	If this limit occurs sporadically in processes with air pockets, solid contents or low conductivity, then either the limit has to be increased or a pulse filter used so as to quell the error messages and also reduce the measurement errors.	
F field frequency too high	Field frequency is not reaching steady state, a measured flow value is still being supplied but may have errors. Measured values are still supplied, but they are always too low. No message if coil broken or bridged.	If Fct. C1.1.14 settling time is set to "manual", increase value in Fct. C1.1.15. If "standard" is set, set field frequency in Fct. C1.1.13 acc. to signal converter nameplate.
F DC offset	ADC over-ranged by DC offsets. No measurement can be performed, the flow is set to zero. No message if empty pipe.	For remote signal converters, check the connection of the signal cable.
F open circuit A	Load on current output A/B/C too high, effective current too low.	Current not correct, mA output cable has open circuit or load too high. Check cable, reduce load (set < 1000 ohm).
F open circuit B		
F open circuit C		

Messages on the display	Description	Actions
Status: F _ _ _ _ _	**Application fault, device OK, but measured values affected.**	**Application test or operator action necessary.**
F over range A	The current or the corresponding measured value is limited by a filter setting.	Check with Fct. C2.1 hardware or sticker in terminal compartment, which output is connected to the terminal. If current output: extend Fct. C2.x.6 range and Fct. C2.x.8 limitation. If frequency output: extend values in Fct. C2.x.5 and Fct. C2.x.7.
F over range B		
F over range C		
F over range A	The pulse rate or the corresponding measured value is limited by a filter setting. Or the demanded pulse rate is too high.	
F over range B		
F over range C		
F active settings	Error during the CRC check of the active settings.	Upload backup 1 or backup 2 settings, check and adjust if necessary.
F factory settings	Error during the CRC check of the factory settings.	-
F backup 1 settings	Error during the CRC check of the backup 1 or 2 settings.	Save active settings in backup 1 or 2.
F backup 2 settings		
F wiring A	Open or short circuit of control input A/B. Only available if used as an active NAMUR input.	-
F wiring B		
F wiring A	The current at the current input is less than 0.5 mA or greater than the limit switch of 23 mA.	-
F wiring B		

Measurements out of specification

Messages on the display	Description	Actions
Status: S _ _ _ _ _	**Out of specification, measurement continues, accuracy possibly less.**	**Maintenance required.**
S uncertain measurement	Device maintenance necessary; measured values only conditionally usable.	Group message, when errors as described below or other influences occur.
S pipe not full	Only for measuring sensors with 3 or 4 electrodes. Full pipe electrode has no contact with medium. Measured values are still supplied, but they are too high.	Measuring pipe not filled, function dependent on Fct. C1.3.5. Check installation. Or electrodes completely insulated e.g. by oil film. Clean!
S empty pipe	1 or 2 measuring electrodes are not in contact with the medium; measured value is set to zero. Measurement continues.	Filling level of EMF less than 50% or electrodes completely insulated. If "0" to be indicated when pipe is empty, activate in Fct. C1.3.1 "cond.+empty pipe [F]".
	The two empty pipe messages cannot appear at the same time. The difference lies in whether the measured value is also set to zero upon the detection of an empty pipe. The sensor electronics will use one or the other function (setting to zero or further measurement) depending on a selection made by the user.	
S linearity	Measured values at both field current levels are not equal. Measured values are still supplied.	Very strong external magnetic fields, or defect in sensor's magnetic circuit or in signal processing.
S flow profile	Measured value is not zero in the case of a non-homogenous magnetic field. Measured values are still supplied.	Unimpeded inlet and outlet runs of the measuring sensor are too short, pipe not full, measuring tube liner damaged.

Messages on the display	Description	Actions
Status: S _ _ _ _ _	**Out of specification, measurement continues, accuracy possibly less.**	**Maintenance required.**
S electrode noise	Noise on the electrodes too high. Measured values are still supplied. No message if empty pipe.	a) Electrodes extremely soiled; b) Conductivity too low: activate noise or pulse filter Fct. C1.2.4, C1.2.7; c) Gas bubbles, solids or chem. reactions in medium: activate noise or pulse filter Fct. C1.2.4, C1.2.7; d) Electrode corrosion (if message also appears when flow is zero): use sensor with suitable electrode material.
S gain error	Preamplifier not equal to the calibrated value; check calibration. Measured values are still supplied.	Defective, replace electronic unit.
S electrode symmetry	Impedance of the two measuring electrodes not equal. Measured values are still supplied.	Deposits in measuring tube or electrode short-circuit to ground. Clean and check measuring tube!
S field coil broken	Field coil resistance too high.	Check field coil connections to the electronic module (for remote versions: field current cable) for open circuit / short circuit
S field coil bridged	Field coil resistance too low.	
S field current deviation	Measured field current not equal to the calibrated value. Check calibration. Measured values are still supplied. No message if coil broken or bridged.	Check field current connections. If OK: defective, replace electronic unit.
S field frequency too high	The ratio of the two measuring windows is not equal to 1, the magnetic field is not properly in steady state. Measured values are still supplied.	If Fct. C1.1.14 settling time is set to "manual", increase value in Fct. C1.1.15. If "standard" is set, set field frequency in Fct. C1.1.13 acc. to measuring sensor nameplate.
S electronic temperature	Upper limit for the permissible electronic temperature has been exceeded.	Ambient temperature too high, direct solar radiation or, for C version, process temperature too high.
S coil temperature	Upper limit for the permissible coil temperature has been exceeded. No message if coil broken/bridged.	Process and ambient temperature too high.
S overflow counter 1	This is counter 1 or FB2 (with Profibus). Counter has overrun and started again at zero.	-
S overflow counter 2	This is counter 2 or FB3 (with Profibus). Counter has overrun and started again at zero.	-
S overflow counter 3	This is counter 3 or FB4 (with Profibus). Not available without IO2. Counter has overrun and started again at zero.	-
S backplane invalid	The data record on the backplane is invalid. The CRC check has revealed a fault.	No data can be loaded from the backplane when replacing electronics. Save the data to the backplane again (Service).
S error current A	Error current at current input	-
S error current B		
S less 10% level	The level sensor reports a low level inside the pipe.	-

Information

Messages on the display	Description	Actions
Status: I _ _ _ _ _	Information (current measurement OK)	
I counter 1 stopped	This is counter 1 or FB2 (with Profibus). The counter has stopped.	If counter to continue counting, activate "yes" in Fct. C2.y.9 (start counter).
I counter 2 stopped	This is counter 2 or FB3 (with Profibus). The counter has stopped.	
I counter 3 stopped	This is counter 3 or FB4 (with Profibus). The counter has stopped.	
I power fail	The device was not in operation for an unknown period of time, because the power was switched off. This message is for information only.	Temporary power failure. Counters did not run during it.
I control input A act.	This message appears when the control input is active. This message is for information only.	-
I control input B act.		
I over range display 1	1st line on page 1 (2) of display limited by filter setting.	Menu display Fct. C4.3 and/or C4.4, select 1st or 2nd meas. page and increase values in functions C4.z.3 range and/or C4.z.4 limitation.
I over range display 2		
I backplane sensor	The data on the backplane are not usable because they have been generated with an incompatible version.	-
I backplane settings	The global settings on the backplane are not usable because they have been generated with an incompatible version.	-
I backplane difference	The data on the backplane differ from the data in the display. If the data are usable, a dialogue is indicated in the display.	-
I optical interface	The optical interface is being used. The keys on the local display are not in operation.	The keys are ready for operation again approx. 60 sec. after the end of the data transfer/removal of the optical interface.
I write cycles overfl.	The maximum number of write cycles of the EEPROM or FRAMS on the Profibus DP PCB has been exceeded.	-
I baudrate search	The baudrate of the Profibus DP interface is searched for.	-
I no data exchange	There is no data exchange between the signal converter and the Profibus.	-
I conductivity off	Conductivity measurement switched off.	Changing of settings in Fct. C1.3.1.
I diagnosis channel off	Diagnosis value switched off.	Changing of settings in Fct. C1.3.17.
I empty pipe	1 or 2 measuring electrodes are not in contact with the medium; measured value is set to zero. No measurement possible.	Measuring pipe not filled; function dependent on Fct. C1.3.2.; Check installation. Or electrodes completely insulated e.g. by oil film. Clean!

Simulation of the measured values

Messages on the display	Description	Actions
Status: C _ _ _ _ _	**Output values partially simulated or fixed**	**Maintenance required.**
C checks in progress	Test mode of the device. Measured values are possibly simulated values or values with fixed settings.	Message depending on the situation via HART® or FDT. Depiction via display if outputs are held by control input or set to zero.
C test sensor	Test function of the measuring sensor electronics is active.	-
C simulation fieldbus	Values on the Foundation Fieldbus interface are simulated.	-
C sensor option PF	Test function of the measuring sensor for partly filled pipes is active.	-

7.1 Spare parts availability

The manufacturer adheres to the basic principle that functionally adequate spare parts for each device or each important accessory part will be kept available for a period of 3 years after delivery of the last production run for the device.

This regulation only applies to spare parts which are subject to wear and tear under normal operating conditions.

7.2 Availability of services

The manufacturer offers a range of services to support the customer after expiration of the warranty. These include repair, technical support and training.

INFORMATION!
For more precise information, please contact your local representative.

7.3 Repairs

Repairs may be carried out exclusively by the manufacturer or the manufacturer authorized specialist companies.

7.4 Returning the device to the manufacturer

7.4.1 General information

This device has been carefully manufactured and tested. If installed and operated in accordance with these operating instructions, it will rarely present any problems.

CAUTION!
Should you nevertheless need to return a device for inspection or repair, please pay strict attention to the following points:

- *Due to statutory regulations on environmental protection and safeguarding the health and safety of our personnel, manufacturer may only handle, test and repair returned devices that have been in contact with products without risk to personnel and environment.*
- *This means that the manufacturer can only service this device if it is accompanied by the following certificate (see next section) confirming that the device is safe to handle.*

CAUTION!
If the device has been operated with toxic, caustic, flammable or water-endangering products, you are kindly requested:

- *to check and ensure, if necessary by rinsing or neutralizing, that all cavities are free from such dangerous substances,*
- *to enclose a certificate with the device confirming that is safe to handle and stating the product used.*

7.4.2 Form (for copying) to accompany a returned device

Company:		Address:
Department:		Name:
Tel. no.:		Fax no.:
Manufacturer's order no. or serial no.:		
The device has been operated with the following medium:		
This medium is:		water-hazardous
		toxic
		caustic
		flammable
		We checked that all cavities in the device are free from such substances.
		We have flushed out and neutralized all cavities in the device.
We hereby confirm that there is no risk to persons or the environment through any residual media contained in the device when it is returned.		
Date:		Signature:
Stamp:		

7.5 Disposal

CAUTION!
Disposal must be carried out in accordance with legislation applicable in your country.

8.1 Measuring principle

An electrically conductive fluid flows inside an electrically insulated pipe through a magnetic field. This magnetic field is generated by a current, flowing through a pair of field coils. Inside of the fluid, a voltage U is generated:

U = v * k * B * D

in which:
v = mean flow velocity
k = factor correcting for geometry
B = magnetic field strength
D = inner diameter of flow meter

The signal voltage U is picked off by electrodes and is proportional to the mean flow velocity v and thus the flow rate q. A signal converter is used to amplify the signal voltage, filter it and convert it into signals for totalising, recording and output processing.

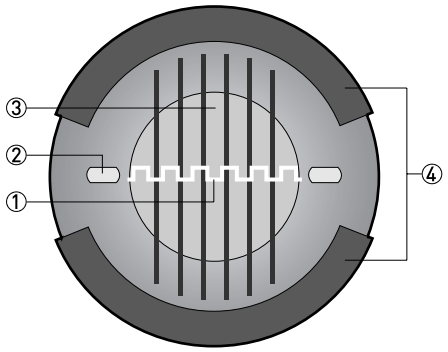

① Induced voltage (proportional to flow velocity)
② Electrodes
③ Magnetic field
④ Field coils

8.2 Technical data

INFORMATION!

- *The following data is provided for general applications. If you require data that is more relevant to your specific application, please contact us or your local representative.*
- *Additional information (certificates, special tools, software,...) and complete product documentation can be downloaded free of charge from the website (Download Center).*

Measuring system

Measuring principle	Faraday's law of induction
Application range	Continuous measurement of current volume flow, flow velocity, conductivity, mass flow (at constant density), coil temperature of the measuring sensor

Design

Modular design	The measuring system consists of a measuring sensor and a signal converter.
Measuring sensor	
OPTIFLUX 1000	DN10...150 / 3/8...6"
OPTIFLUX 2000	DN25...3000 / 1...120"
OPTIFLUX 4000	DN2.5...3000 / 1/10...120"
OPTIFLUX 5000	Flange: DN15...300 / ½...12" Sandwich: DN2.5...100 / 1/10...4"
OPTIFLUX 6000	DN2.5...150 / 1/10...6"
OPTIFLUX 7000	Flange: DN25...100 / 1...4" Sandwich: DN25...100 / 1...4"
	This capacitive flowmeter is only available as compact version (OPTIFLUX 7300 C).
WATERFLUX 3000	DN25...600 / 1...24"
TIDALFLUX 4000	DN200...1600 / 8...64"
	This sensor for measurements in partly filled pipelines is only available as a remote field housing version (TIDALFLUX 4300 F).
	With the exception of the OPTIFLUX 1000, TIDALFLUX 4000 and WATERFLUX 3000 all measuring sensors are also available as Ex versions.
Signal converter	
Compact version (C)	OPTIFLUX x300 C (x = 1, 2, 4, 5, 6, 7) or WATERFLUX 3300 C
Field housing (F) - remote version	IFC 300 F
Wall-mounted housing (W) - remote version	IFC 300 W
	Compact and field housing versions are also available as Ex versions.
19" rack-mounted housing (R) - remote version	IFC 300 R

Options	
Outputs / inputs	Current (incl. HART®), pulse, frequency and/or status output, limit switch and/or control input or current input (depending on the I/O version)
Totalizer	2 (optional 3) internal counters with a max. of 8 counter places (e.g. for counting volume and/or mass units)
Verification	Integrated verification, diagnostic functions: measuring device, process, measured value, empty pipe detection, stabilization
Communication interfaces	Foundation Fieldbus, Profibus PA and DP, Modbus, HART®
Display and user interface	
Graphic display	LC display, backlit white.
	Size: 128 x 64 pixels, corresponds to 59 x 31 mm = 2.32" x 1.22"
	Display can be rotated in 90° increments.
	Ambient temperatures below -25°C / -13°F, may affect the readability of the display.
Operating elements	4 optical keys for operator control of the signal converter without opening the housing.
	Infrared interface for reading and writing all parameters with IR interface (option) without opening the housing.
Remote control	PACTware® (incl. Device Type Manager (DTM))
	HART® Hand Held Communicator from Emerson Process
	AMS® from Emerson Process
	PDM® from Siemens
	All DTMs and drivers are available free of charge from the manufacturer's website.
Display functions	
Operating menu	Setting the parameters using 2 measured value pages, 1 status page, 1 graphics page (measured values and graphics are freely adjustable)
Language display texts (as language package)	Standard: English, French, German, Dutch, Portuguese, Swedish, Spanish, Italian
	Eastern Europe: English, Slovenian, Czech, Hungarian
	Northern Europe: English, Danish, Polish
	China: English, German, Chinese
	Russia: English, German, Russian
Units	Metric, British and US units selectable as required from lists for volume / mass flow and counting, flow velocity, electrical conductivity, temperature, pressure

Measuring accuracy

Reference conditions	Depending on the measuring sensor version.
	Refer to technical data for the measuring sensor.
Maximum measuring error	±0.15% of the measured value ±1 mm/s, depending on the measuring sensor
	For detailed information and accuracy curves, refer to chapter "Accuracy".
	Current output electronics: ±5 µA
Repeatability	±0.06% acc. to OIML R117; Not valid for WATERFLUX 3000, OPTIFLUX 7000 and TIDALFLUX 4000

Operating conditions

Temperature	
Process temperature	Refer to technical data for the measuring sensor.
Ambient temperature	Depending on the version and combination of outputs.
	It is a good idea to protect the converter from external heat sources such as direct sunlight as higher temperatures reduce the life cycle of all electronic components.
	-40...+65°C / -40...+149°F
	Ambient temperatures below -25°C / -13°F, may affect the readability of the display.
Storage temperature	-50...+70°C / -58...+158°F
Pressure	
Medium	Refer to technical data for the measuring sensor.
Ambient pressure	Atmosphere: Height up to 2000 m / 6561.7 ft
Chemical properties	
Electrical conductivity	**Standard** All media except for water: ≥ 1 µS/cm (also refer to the technical data for the measuring sensor) Water: ≥ 20 µS/cm
	TIDALFLUX 4000 All media: ≥ 50 µS/cm (also refer to the technical data for the measuring sensor)
	OPTIFLUX 7000 All media except for water: ≥ 0.05 µS/cm (also refer to the technical data for the measuring sensor) Water: ≥ 1 µS/cm
Physical condition	Conductive, liquid media
Solid content (volume)	Can be used up to ≤ 70% for OPTIFLUX and TIDALFLUX measuring sensors
	The greater the solid content, the less accurate the measurements!
Gas content (volume)	Can be used up to ≤ 5% for OPTIFLUX and TIDALFLUX measuring sensors
	The greater the gas content, the less accurate the measurements!
Flow	For detailed information, refer to chapter "Flow tables".
Other conditions	
Protection category acc. to IEC 529 / EN 60529	C (compact version) & F (field housing): IP66/67 (acc. to NEMA 4/4X/6)
	W (wall-mounted housing): IP65/66 (acc. to NEMA 4/4X)
	R (19" rack-mounted housing (28 TE) or (21 TE)): IP20 (acc. to NEMA 1); Use: Indoor only, level of pollution 2 and relative humidity < 75%

Installation conditions

Installation	For detailed information, refer to chapter "Installation conditions".
Inlet/outlet runs	Refer to technical data for the measuring sensor.
Dimensions and weights	For detailed information refer to chapter "Dimensions and weights".

Materials

Signal converter housing	**Standard**
	Version C and F: die-cast aluminium (polyurethane coated)
	Version W: polyamide - polycarbonate
	Version R (28 TE): Aluminium, stainless steel and aluminium sheet, partially polyester-coated
	Version R (21 TE): Aluminium and aluminium sheet, partially polyester-coated
	Option
	Versions C and F: Stainless steel 316 L (1.4408)
Measuring sensor	For housing materials, process connections, liners, grounding electrodes and gaskets, refer to technical data for the measuring sensor.

Electrical connection

General	Electrical connection is carried out in conformity with the VDE 0100 directive "Regulations for electrical power installations with line voltages up to 1000 V" or equivalent national regulations.
Power supply	Standard: 100...230 VAC (-15% / +10%), 50/60 Hz 240 VAC + 5% is included in the tolerance range.
	Option 1: 12...24 VDC (-55% / +30%) 12 VDC - 10% is included in the tolerance range.
	Option 2: 24 VAC/DC (AC: -15% / +10%, 50/60 Hz; DC: -25% / +30%) 12 V is **not** included in the tolerance range.
Power consumption	AC: 22 VA
	DC: 12 W
Signal cable	Only for remote versions.
	DS 300 (type A) Max. length: 600 m / 1968 ft (depending on electrical conductivity and measuring sensor version)
	BTS 300 (type B) Max. length: 600 m / 1968 ft (depending on electrical conductivity and measuring sensor version)
	Type LIYCY (only FM, Class 1 Div. 2) Max. length: 100 m / 328 ft (depending on electrical conductivity and measuring sensor version)
Interface cable (only TIDALFLUX)	**Type LIYCY** Max. length: 600 m / 1968 ft (3 x 0.75 mm^2 shielded cable)
Cable entries (except TIDALFLUX)	Standard: M20 x 1.5 (8...12 mm) for C, F and W version; Terminal strip for R-version
	Option: ½" NPT, PF ½ for C, F and W version
Cable entries (only TIDALFLUX)	Standard: Converter: 2 x M20 x 1.5 metal + 1 x M20 x 1.5 EMC metal Sensor: 2 x M20 x 1.5 plastic + 1 x M16 x 1.5 EMC metal
	Option: NPT

Inputs and outputs

General	All outputs are electrically isolated from each other and from all other circuits.		
	All operating data and output values can be adjusted.		
Description of used abbreviations	U_{ext} = external voltage; R_L = load + resistance; U_o = terminal voltage; I_{nom} = nominal current Safety limit values (Ex i): U_i = max. input voltage; I_i = max. input current; P_i = max. input power rating; C_i = max. input capacity; L_i = max. input inductivity		
Current output			
Output data	Volume flow, mass flow, diagnostic value, flow velocity, coil temperature, conductivity		
Settings	**Without HART®**		
	Q = 0%: 0…15 mA; Q = 100%: 10…20 mA		
	Error identification: 3…22 mA		
	With HART®		
	Q = 0%: 4…15 mA; Q = 100%: 10…20 mA		
	Error identification: 3.5…22 mA		
Operating data	**Basic I/Os**	**Modular I/Os**	**Ex i I/Os**
Active	$U_{int, nom}$ = 24 VDC $I \leq 22$ mA $R_L \leq 1$ kΩ		$U_{int, nom}$ = 20 VDC $I \leq 22$ mA $R_L \leq 450$ Ω
			U_0 = 21 V I_0 = 90 mA P_0 = 0.5 W C_0 = 90 nF / L_0 = 2 mH C_0 = 110 nF / L_0 = 0.5 mH Linear characteristics
Passive	$U_{ext} \leq 32$ VDC $I \leq 22$ mA $U_0 \geq 1.8$ V $R_L \leq (U_{ext} - U_0) / I_{max}$		$U_{ext} \leq 32$ VDC $I \leq 22$ mA $U_0 \geq 4$ V $R_L \leq (U_{ext} - U_0) / I_{max}$
			U_i = 30 V I_i = 100 mA P_i = 1 W C_i = 10 nF L_i ~ 0 mH

HART®			
Description	HART® protocol via active and passive current output		
	HART® version: V5		
	Universal HART® parameter: completely integrated		
Load	≥ 250 Ω at HART® test point; Note maximum load for current output!		
Multi-Drop operation	Yes, current output = 4 mA		
	Multi-Drop address adjustable in operation menu 1…15		
Device drivers	Available for FC 375/475, AMS, PDM, FDT/DTM		
Registration (HART Communication Foundation)	Yes		
Pulse or frequency output			
Output data	Pulse output: volume flow, mass flow		
	Frequency output: volume flow, mass flow, diagnostic value, flow velocity, coil temperature, conductivity		
Function	Adjustable as pulse or frequency output		
Pulse rate/frequency	Adjustable final value: 0.01...10000 pulse/s or Hz		
Settings	Pulses per volume or mass unit or max. frequency for 100% flow		
	Pulse width: setting automatic, symmetric or fixed (0.05...2000 ms)		
Operating data	**Basic I/Os**	**Modular I/Os**	**Ex i I/Os**
Active	-	U_{nom} = 24 VDC	-
		f_{max} in operating menu set to $f_{max} \leq 100$ Hz: I ≤ 20 mA open: I ≤ 0.05 mA closed: $U_{0, nom}$ = 24 V at I = 20 mA	
		f_{max} in operating menu set to 100 Hz < $f_{max} \leq$ 10 kHz: I ≤ 20 mA open: I ≤ 0.05 mA closed: $U_{0, nom}$ = 22.5 V at I = 1 mA $U_{0, nom}$ = 21.5 V at I = 10 mA $U_{0, nom}$ = 19 V at I = 20 mA	

Operating data	Basic I/Os	Modular I/Os	Ex i I/Os
Passive	$U_{ext} \leq 32$ VDC		-
	f_{max} in operating menu set to $f_{max} \leq 100$ Hz: $I \leq 100$ mA $R_{L, max} = 47$ kΩ $R_{L, min} = (U_{ext} - U_0) / I_{max}$ open: $I \leq 0.05$ mA at $U_{ext} = 32$ VDC closed: $U_{0, max} = 0.2$ V at $I \leq 10$ mA $U_{0, max} = 2$ V at $I \leq 100$ mA		
	f_{max} in operating menu set to 100 Hz < $f_{max} \leq$10 kHz: $I \leq 20$ mA $R_{L, max} = 47$ kΩ $R_{L, min} = (U_{ext} - U_0) / I_{max}$ open: $I \leq 0.05$ mA at $U_{ext} = 32$ VDC closed: $U_{0, max} = 1.5$ V at $I \leq 1$ mA $U_{0, max} = 2.5$ V at $I \leq 10$ mA $U_{0, max} = 5.0$ V at $I \leq 20$ mA		
NAMUR	-	Passive to EN 60947-5-6 open: $I_{nom} = 0.6$ mA closed: $I_{nom} = 3.8$ mA	Passive to EN 60947-5-6 open: $I_{nom} = 0.43$ mA closed: $I_{nom} = 4.5$ mA
			$U_i = 30$ V $I_i = 100$ mA $P_i = 1$ W C_i =10 nF L_i ~ 0 mH
Low flow cut-off			
Function	Switching point and hysteresis separately adjustable for each output, counter and the display		
Switching point	Current output, frequency output: 0…20%; set in increments of 0.1 Pulse output: Unit is volume flow or mass flow and not limited		
Hysteresis			
Time constant			
Function	The time constant corresponds to the elapsed time until 63% of the end value has been reached according to a step function.		
Settings	Set in increments of 0.1.		
	0…100 s		

Status output / limit switch			
Function and settings	Adjustable as automatic measuring range conversion, display of flow direction, counter overflow, error, switching point or empty pipe detection		
	Valve control with activated dosing function		
	Status and/or control: ON or OFF		
Operating data	**Basic I/Os**	**Modular I/Os**	**Ex i I/Os**
Active	-	U_{int} = 24 VDC I ≤ 20 mA open: I ≤ 0.05 mA closed: $U_{0, nom}$ = 24 V at I = 20 mA	-
Passive	U_{ext} ≤ 32 VDC I ≤ 100 mA $R_{L, max}$ = 47 kΩ $R_{L, min} = (U_{ext} - U_0) / I_{max}$ open: I ≤ 0.05 mA at U_{ext} = 32 VDC closed: $U_{0, max}$ = 0.2 V at I ≤ 10 mA $U_{0, max}$ = 2 V at I ≤ 100 mA	U_{ext} = 32 VDC I ≤ 100 mA $R_{L, max}$ = 47 kΩ $R_{L, min} = (U_{ext} - U_0) / I_{max}$ open: I ≤ 0.05 mA at U_{ext} = 32 VDC closed: $U_{0, max}$ = 0.2 V at I ≤ 10 mA $U_{0, max}$ = 2 V at I ≤ 100 mA	-
NAMUR	-	Passive to EN 60947-5-6 open: I_{nom} = 0.6 mA closed: I_{nom} = 3.8 mA	Passive to EN 60947-5-6 open: I_{nom} = 0.43 mA closed: I_{nom} = 4.5 mA
			U_i = 30 V I_i = 100 mA P_i = 1 W C_i =10 nF L_i = 0 mH

Control input			
Function	Hold value of the outputs (e.g. for cleaning work), set value of the outputs to "zero", counter and error reset, range change.		
	Start of dosing when dosing function is activated.		
Operating data	**Basic I/Os**	**Modular I/Os**	**Ex i I/Os**
Active	-	U_{int} = 24 VDC Ext. contact open: $U_{0, nom}$ = 22 V Ext. contact closed: I_{nom} = 4 mA Contact closed (on): $U_0 \geq 12$ V with I_{nom} = 1.9 mA Contact open (off): $U_0 \leq 10$ V with I_{nom} = 1.9 mA	-
Passive	8 V ≤ U_{ext} ≤ 32 VDC I_{max} = 6.5 mA at U_{ext} ≤ 24 VDC I_{max} = 8.2 mA at U_{ext} ≤ 32 VDC Contact closed (on): $U_0 \geq 8$ V with I_{nom} = 2.8 mA Contact open (off): $U_0 \leq 2.5$ V with I_{nom} = 0.4 mA	3 V ≤ U_{ext} ≤ 32 VDC I_{max} = 9.5 mA at U_{ext} ≤ 24 V I_{max} = 9.5 mA at U_{ext} ≤ 32 V Contact closed (on): $U_0 \geq 3$ V with I_{nom} = 1.9 mA Contact open (off): $U_0 \leq 2.5$ V with I_{nom} = 1.9 mA	U_{ext} ≤ 32 VDC I ≤ 6 mA at U_{ext} = 24 V I ≤ 6.6 mA at U_{ext} = 32 V On: $U_0 \geq 5.5$ V or I ≥ 4 mA Off: $U_0 \leq 3.5$ V or I ≤ 0.5 mA U_i = 30 V I_i = 100 mA P_i = 1 W C_i = 10 nF L_i = 0 mH
NAMUR	-	Active to EN 60947-5-6 Terminals open: $U_{0, nom}$ = 8.7 V Contact closed (on): $U_{0, nom}$ = 6.3 V with I_{nom} > 1.9 mA Contact open (off): $U_{0, nom}$ = 6.3 V with I_{nom} < 1.9 mA Detection of cable break: $U_0 \geq 8.1$ V with I ≤ 0.1 mA Detection of cable short circuit: $U_0 \leq 1.2$ V with I ≥ 6.7 mA	-

Current input			
Function	The following values can be delivered from the measuring sensor to the current input: temperature, pressure or current		
Operating data	**Basic I/Os**	**Modular I/Os**	**Ex i I/Os**
Active	-	$U_{int, nom}$ = 24 VDC I ≤ 22 mA I_{max} ≤ 26 mA (electronically limited) $U_{0, min}$ = 19 V at I ≤ 22 mA No HART®	$U_{int, nom}$ = 20 VDC I ≤ 22 mA $U_{0, min}$ = 14 V at I ≤ 22 mA No HART®
			U_0 = 24.5 V I_0 = 99 mA P_0 = 0.6 W C_0 = 75 nF / L_0 = 0.5 mH No HART®
Passive	-	U_{ext} ≤ 32 VDC I ≤ 22 mA I_{max} ≤ 26 mA (electronically limited) $U_{0, max}$ = 5 V at I ≤ 22 mA No HART®	U_{ext} ≤ 32 VDC I ≤ 22 mA $U_{0, max}$ = 4 V at I ≤ 22 mA No HART®
			U_i = 30 V I_i = 100 mA P_i = 1 W C_i = 10 nF L_i = 0 mH No HART®

PROFIBUS DP	
Description	Galvanically isolated acc. to IEC 61158
	Profile version: 3.01
	Automatic data transmission rate recognition (max. 12 MBaud)
	Bus address adjustable via local display at the measuring device
Function blocks	5 x analogue input, 3 x totaliser
Output data	Volume flow, mass flow, volume counter 1 + 2, mass counter, velocity, coil temperature, conductivity
PROFIBUS PA	
Description	Galvanically isolated acc. to IEC 61158
	Profile version: 3.01
	Current consumption: 10.5 mA
	Permissible bus voltage: 9…32 V; in Ex application: 9...24 V
	Bus interface with integrated reverse polarity protection
	Typical error current FDE (Fault Disconnection Electronic): 4.3 mA
	Bus address adjustable via local display at the measuring device
Function blocks	5 x analogue input, 3 x totaliser
Output data	Volume flow, mass flow, volume counter 1 + 2, mass counter, velocity, coil temperature, conductivity
FOUNDATION Fieldbus	
Description	Galvanically isolated acc. to IEC 61158
	Current consumption: 10.5 mA
	Permissible bus voltage: 9…32 V; in Ex application: 9...24 V
	Bus interface with integrated reverse polarity protection
	Link Master function (LM) supported
	Tested with Interoperable Test Kit (ITK) version 5.1
Function blocks	3 x analogue Input, 2 x integrator, 1 x PID
Output data	Volume flow, mass flow, velocity, coil temperature, conductivity, electronics temperature
Modbus	
Description	Modbus RTU, Master / Slave, RS485
Address range	1…247
Supported function codes	03, 04, 16
Broadcast	Supported with function code 16
Supported Baudrate	1200, 2400, 4800, 9600, 19200, 38400, 57600, 115200 Baud

Approvals and certificates

CE	The device fulfils the statutory requirements of the EC directives. The manufacturer certifies that these requirements have been met by applying the CE marking.
Electromagnetic compatibility (EMC)	2004/108/EC in conjunction with EN 61326-1 (A1, A2)
European Pressure Equipment Directive	PED 97/23 (only for compact versions)
Non-Ex	Standard
Hazardous areas	
Option (only version C)	
ATEX	II 2 GD Ex d [ia] IIC T6...T3
	II 2 GD Ex de [ia] IIC T6...T3
	II 2 GD Ex e [ia] IIC T6...T3
	II 3 G Ex nA [nL] IIC T4...T3
Option (only F version (except TIDALFLUX))	
ATEX	II 2 GD Ex de [ia] IIC T6
	II 2(1) GD Ex de [ia] IIC T6
NEPSI	Ex de [ia] IIC T6
Option (only C and F version (except TIDALFLUX))	
FM / CSA	Class I, Div. 2, Group A, B, C and D
	Class II, Div. 2, Group F and G
SAA (in preparation)	Aus Ex zone 1/2
TIIS (in preparation)	Zone 1/2
Custody transfer (except TIDALFLUX & OPTIFLUX 7300 C)	
None	Standard
Option	Cold drinking water (OIML R 49, KIWA K618, MI-001); liquids other than water (OIML R 117-1, MI-005)
VdS (only OPTIFLUX 2300 C, F and W)	
VdS	Use in fire and safety equipment
	Only valid for nominal diameters DN25...250 / 1...10"
Other standards and approvals	
Shock and vibration resistance	IEC 68-2-3
NAMUR	NE 21, NE 43, NE 53

8.3 Dimensions and weights

8.3.1 Housing

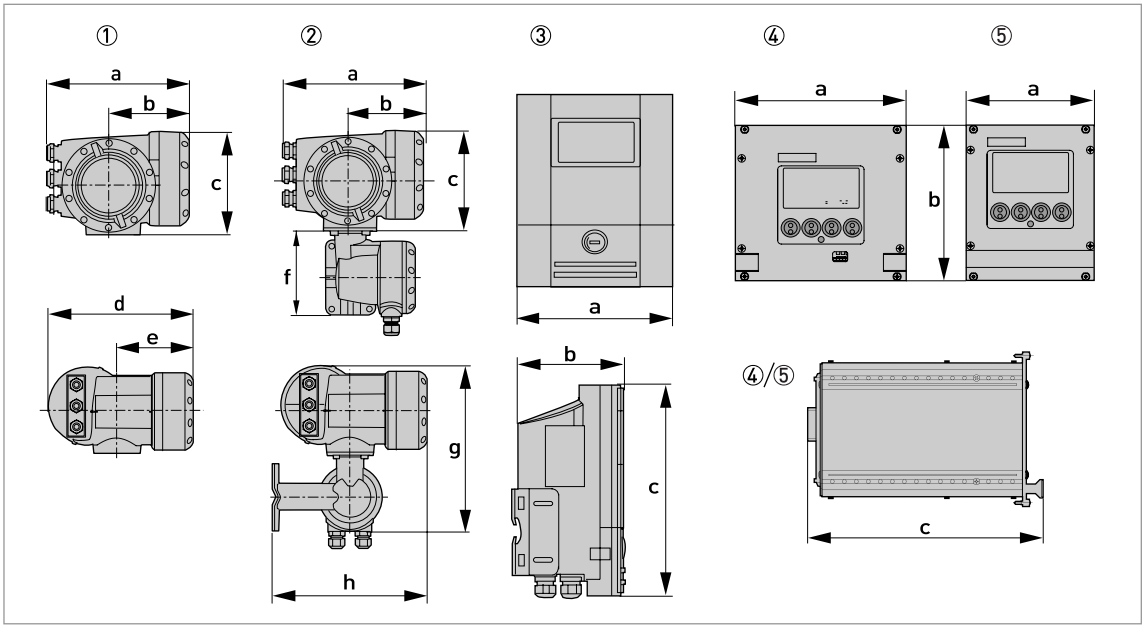

① Compact version (C)
② Field housing (F) - remote version
③ Wall-mounted housing (W) - remote version
④ 19" rack-mounted housing 28 TE (R) - remote version
⑤ 19" rack-mounted housing 21 TE (R) - remote version

Dimensions and weights in mm and kg

Version	Dimensions [mm]							Weight [kg]
	a	b	c	d	e	g	h	
C	202	120	155	260	137	-	-	4.2
F	202	120	155	-	-	295.8	277	5.7
W	198	138	299	-	-	-	-	2.4
R	142 (28 TE)	129 (3 HE)	195	-	-	-	-	1.2
	107 (21 TE)	129 (3 HE)	190	-	-	-	-	0.98

Dimensions and weights in inch and lb

Version	Dimensions [inch]							Weight [lb]
	a	b	c	d	e	g	h	
C	7.75	4.75	6.10	10.20	5.40	-	-	9.30
F	7.75	4.75	6.10	-	-	11.60	10.90	12.60
W	7.80	5.40	11.80	-	-	-	-	5.30
R	5.59 (28 TE)	5.08 (3 HE)	7.68	-	-	-	-	2.65
	4.21 (21 TE)	5.08 (3 HE)	7.48	-	-	-	-	2.16

8.3.2 Mounting plate, field housing

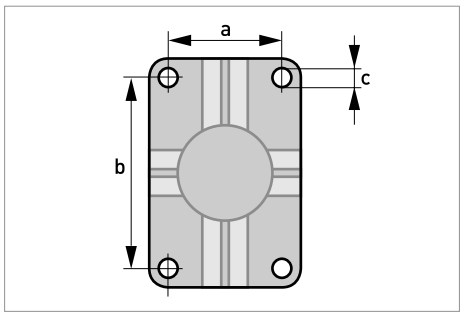

Dimensions in mm and inch

	[mm]	[inch]
a	60	2.4
b	100	3.9
c	Ø9	Ø0.4

8.3.3 Mounting plate, wall-mounted housing

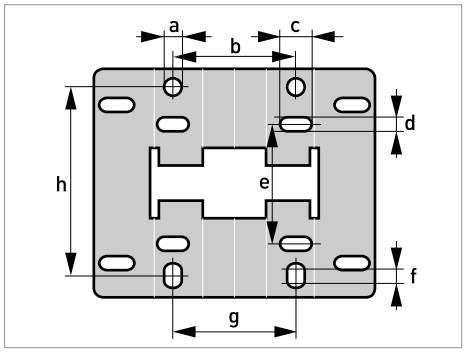

Dimensions in mm and inch

	[mm]	[inch]
a	Ø9	Ø0.4
b	64	2.5
c	16	0.6
d	6	0.2
e	63	2.5
f	4	0.2
g	64	2.5
h	98	3.85

8.4 Flow tables

Flow rate in m/s and m^3/h

	$Q_{100\,\%}$ in m^3/h			
v [m/s]	0.3	1	3	12
DN [mm]	Min. flow	Nominal flow		Max. flow
2.5	0.005	0.02	0.05	0.21
4	0.01	0.05	0.14	0.54
6	0.03	0.10	0.31	1.22
10	0.08	0.28	0.85	3.39
15	0.19	0.64	1.91	7.63
20	0.34	1.13	3.39	13.57
25	0.53	1.77	5.30	21.21
32	0.87	2.90	8.69	34.74
40	1.36	4.52	13.57	54.29
50	2.12	7.07	21.21	84.82
65	3.58	11.95	35.84	143.35
80	5.43	18.10	54.29	217.15
100	8.48	28.27	84.82	339.29
125	13.25	44.18	132.54	530.15
150	19.09	63.62	190.85	763.40
200	33.93	113.10	339.30	1357.20
250	53.01	176.71	530.13	2120.52
300	76.34	254.47	763.41	3053.64
350	103.91	346.36	1039.08	4156.32
400	135.72	452.39	1357.17	5428.68
450	171.77	572.51	1717.65	6870.60
500	212.06	706.86	2120.58	8482.32
600	305.37	1017.90	3053.70	12214.80
700	415.62	1385.40	4156.20	16624.80
800	542.88	1809.60	5428.80	21715.20
900	687.06	2290.20	6870.60	27482.40
1000	848.22	2827.40	8482.20	33928.80
1200	1221.45	3421.20	12214.50	48858.00
1400	1433.52	4778.40	14335.20	57340.80
1600	2171.46	7238.20	21714.60	86858.40
1800	2748.27	9160.9	27482.70	109930.80
2000	3393.00	11310.00	33930.00	135720.00
2200	4105.50	13685.00	41055.00	164220.00
2400	4885.80	16286.00	48858.00	195432.00
2600	5733.90	19113.00	57339.00	229356.00
2800	6650.10	22167.00	66501.00	266004.00
3000	7634.10	25447.00	76341.00	305364.00

Flow rate in ft/s and US gallons/min

	$Q_{100\ \%}$ in US gallons/min			
v [ft/s]	1	3.3	10	40
DN [inches]	Min. flow	Nominal flow		Max. flow
1/10	0.02	0.09	0.23	0.93
1/8	0.06	0.22	0.60	2.39
1/4	0.13	0.44	1.34	5.38
3/8	0.37	1.23	3.73	14.94
1/2	0.84	2.82	8.40	33.61
3/4	1.49	4.98	14.94	59.76
1	2.33	7.79	23.34	93.36
1.25	3.82	12.77	38.24	152.97
1.5	5.98	19.90	59.75	239.02
2	9.34	31.13	93.37	373.47
2.5	15.78	52.61	159.79	631.16
3	23.90	79.69	239.02	956.09
4	37.35	124.47	373.46	1493.84
5	58.35	194.48	583.24	2334.17
6	84.03	279.97	840.29	3361.17
8	149.39	497.92	1493.29	5975.57
10	233.41	777.96	2334.09	9336.37
12	336.12	1120.29	3361.19	13444.77
14	457.59	1525.15	4574.93	18299.73
16	597.54	1991.60	5975.44	23901.76
18	756.26	2520.61	7562.58	30250.34
20	933.86	3112.56	9336.63	37346.53
24	1344.50	4481.22	13445.04	53780.15
28	1829.92	6099.12	18299.20	73196.79
32	2390.23	7966.64	23902.29	95609.15
36	3025.03	10082.42	30250.34	121001.37
40	3734.50	12447.09	37346.00	149384.01
48	5377.88	17924.47	53778.83	215115.30
56	6311.60	21038.46	63115.99	252463.94
64	9560.65	31868.51	95606.51	382426.03
72	12100.27	40333.83	121002.69	484010.75
80	14938.92	49795.90	149389.29	597557.18
88	18075.97	60252.63	180759.73	723038.90
96	21511.53	71704.38	215115.30	860461.20
104	25245.60	84151.16	252456.02	1009824.08
112	29279.51	97597.39	292795.09	1171180.37
120	33611.93	112038.64	336119.31	1344477.23

8.5 Measuring accuracy (except TIDALFLUX)

Reference conditions

- Medium: water
- Temperature: 20°C / 68°F
- Pressure: 1 bar / 14.5 psi
- Inlet section: ≥ 5 DN

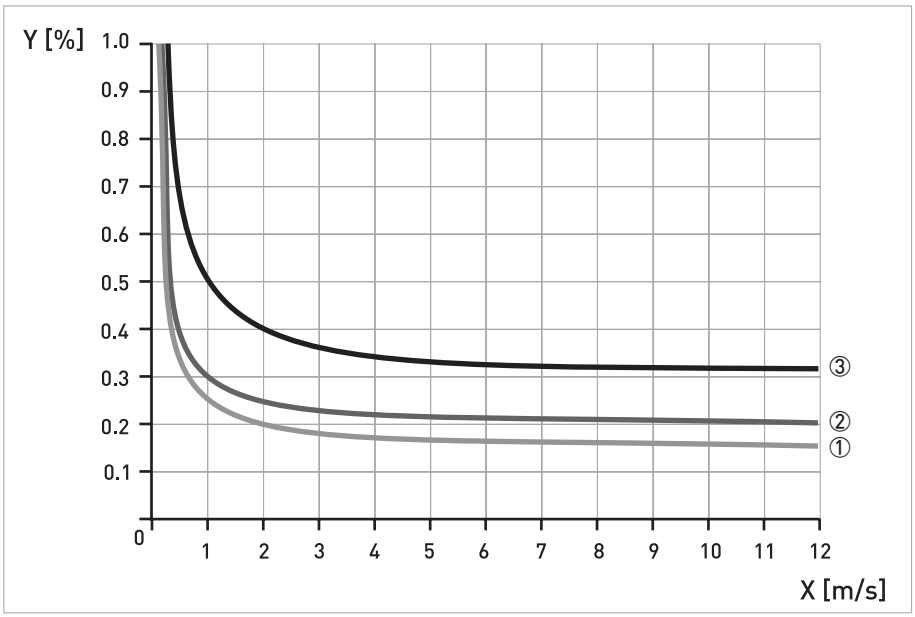

X [m/s]: flow velocity
Y [%]: deviation from the actual measured value (mv)

	DN [mm]	DN [inch]	Accuracy	Curve
OPTIFLUX 5300	10….100	3/8…4	0.15% of mv + 1 mm/s	①
	150...300	6...12	0.2% of mv + 1 mm/s	②
OPTIFLUX 2300 / 4300 / 6300	10….1600	3/8…80	0.2% of mv + 1 mm/s	②
OPTIFLUX 1300	10…150	3/8…6	0.3% of mv + 2 mm/s	③
OPTIFLUX 2300 / 4300	>1600	>64	0.3% of mv + 2 mm/s	③
OPTIFLUX 4300 / 5300 / 6300	<10	<3/8	0.3% of mv + 2 mm/s	③
OPTIFLUX 7300	25...100	1...4	v ≥ 1 m/s / 3.3 ft/s: ±0.5% of mv	-
			v < 1 m/s / 3.3 ft/s: ±0.5% of mv + 5 mm/s	
WATERFLUX 3300	25...600	1...24	0.2% of mv + 1 mm/s	②

8.6 Measuring accuracy (only TIDALFLUX)

The measuring accuracy for partly filled pipes and completely filled pipes are different. In these graphs it is assumed that the velocity at full scale value is at least 1 m/s (is also the standard value for calibration, since it will result in the most accurate measurements).

Maximum measuring error	Related to volume flow (mv = measured value, FS = Full Scale)
	These values are related to the pulse / frequency output
	The additional typical measuring deviation for the current output is ±10 µA
	Partly filled:
	v ≥ 1 m/s / 3.3 ft/s at Full Scale: ≤ 1% of FS
	Fully filled:
	v ≥ 1 m/s / 3.3 ft/s: ≤ 1% of mv
	v < 1 m/s / 3.3 ft/s: ≤ 0.5% of mv + 5 mm/s / 0.2 inch/s
	Minimum level: 10% of inner diameter

Fully filled pipes

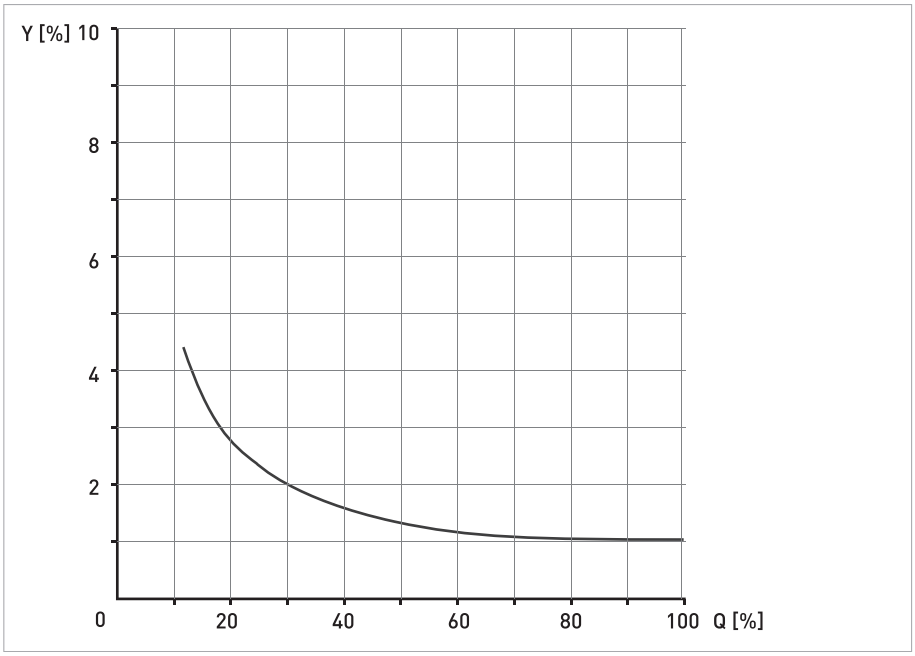

Figure 8-1: Maximum measuring error of measured value.

Partly filled pipes

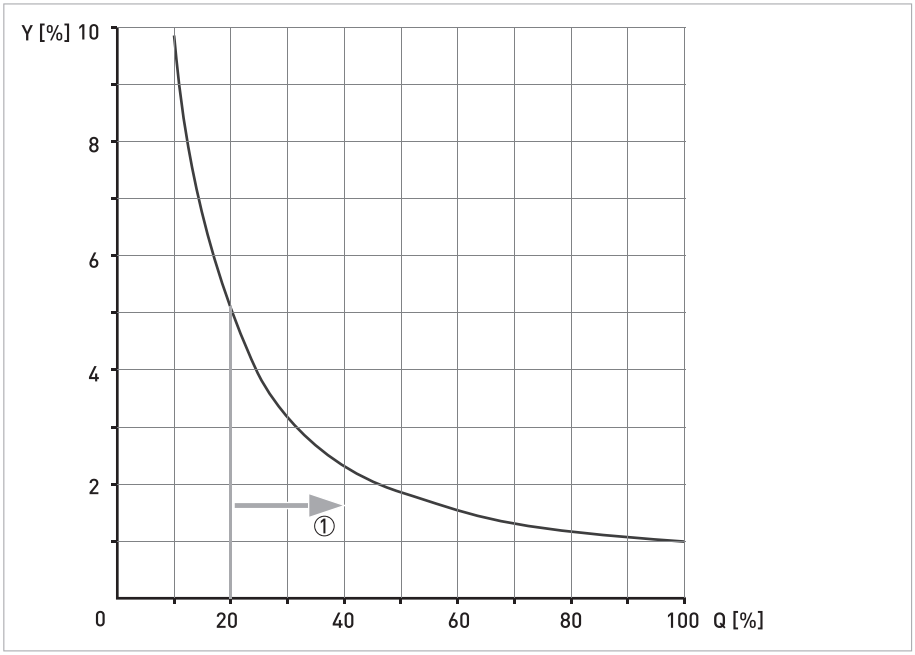

Figure 8-2: Maximum measuring error of measured value.

① Advised working area

9.1 General description

The open HART® protocol, which can be used freely, is integrated into the signal converter for communication.

Devices which support the HART® protocol are classified as either operating devices or field devices. When it comes to operating devices (Master), both manual control units (Secondary Master) and PC-supported workstations (Primary Master) are used in, for example, a control centre.

HART® field devices include sensors, converters and actuators. The field devices range from 2-wire to 4-wire to intrinsically safe versions for use in hazardous areas.

The HART® data are superimposed over the analogue 4...20 mA signal via FSK modem. This way, all of the connected devices can communicate digitally with one another via the HART® protocol while simultaneously transferring the analogue signals.

When it comes to the field devices and manual control units, the FSK or HART® modem is integrated. With a PC, however, communication takes place via an external modem which must be connected to the serial interface. There are also other connection variants, as shown in the following connection diagrams.

9.2 Software history

INFORMATION!
In the table below, "x" is a placeholder for possible multi-digit alphanumeric combinations, depending on the available version.

Release date	Electronic Revision	SW.REV.UIS	SW.REV.MS	HART®	
				Device Revision	DD Revision
		2.x.x	1.x.x	1	1 (only AMS)
		2.x.x	1.x.x	1	2
2008-05-13	3.2.0x	3.x.x	2.x.x / 3.x.x	2	1

HART® identification codes and revision numbers

Manufacturer ID:	69 (0x45)
Device:	227 (0xE3)
Device Revision:	2
DD Revision	1, 2
HART® Universal Revision:	5
FC 375/475 system SW.Rev.:	≥ 1.8
AMS version:	≥ 7.0
PDM version:	≥ 6.0
FDT version:	≥ 1.2

9.3 Connection variants

The signal converter is a 4-wire device with 4...20 mA current output and HART® interface. Depending on the version, the settings and the wiring, the current output can operate as passive or active output.

- **Multi-Drop Mode is supported**
  In a Multi-Drop communication system, more than 2 devices are connected to a common transmission cable.
- **Burst Mode is not supported**
  In the Burst Mode a slave device transfers cyclic pre-defined response telegrams, to get a higher rate of data transfer.

INFORMATION!

For detailed information about the electrical connection of the signal converter for HART®, see the "Electrical connection" section.

There are two ways of using the HART® communication:

- as Point-to-Point connection and
- as Multi-Drop connection with 2-wire connection or
  as Multi-Drop connection with 3-wire connection.

9.3.1 Point-to-Point connection - analogue / digital mode

Point-to-Point connection between the signal converter and the HART® Master.

The current output of the device may be active or passive.

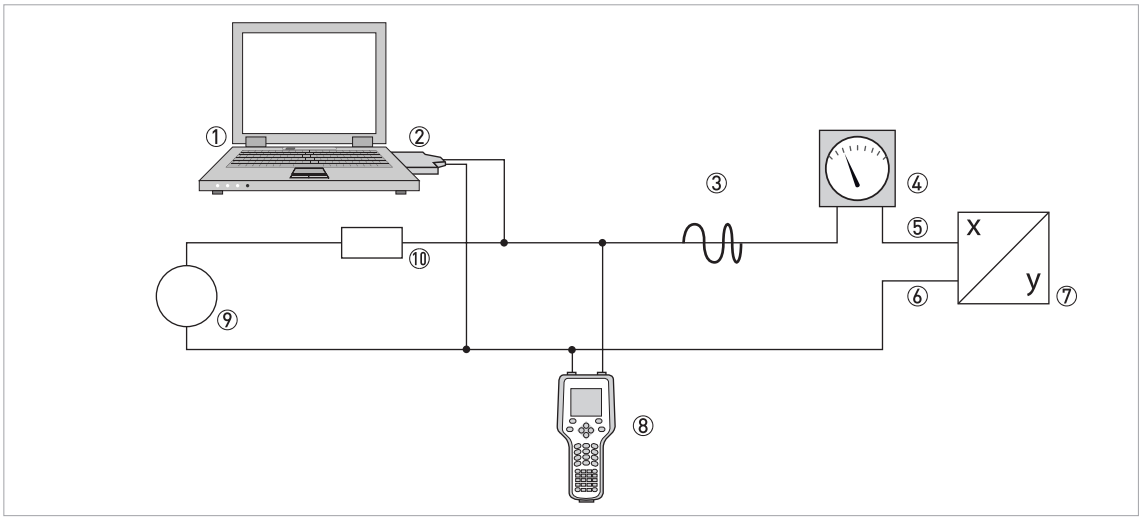

① Primary Master
② FSK modem or HART® modem
③ HART® signal
④ Analogue display
⑤ Signal converter terminals A (C)
⑥ Signal converter terminals A- (C-)
⑦ Signal converter with address = 0 and passive or active current output
⑧ Secondary Master
⑨ Power supply for devices (slaves) with passive current output
①⓪ Load ≥ 250 Ω (Ohm)

9.3.2 Multi-Drop connection (2-wire connection)

In the case of a Multi-Drop connection, up to 15 devices may be installed in parallel (this signal converter and other HART® devices).

The current outputs of the devices must be passive!

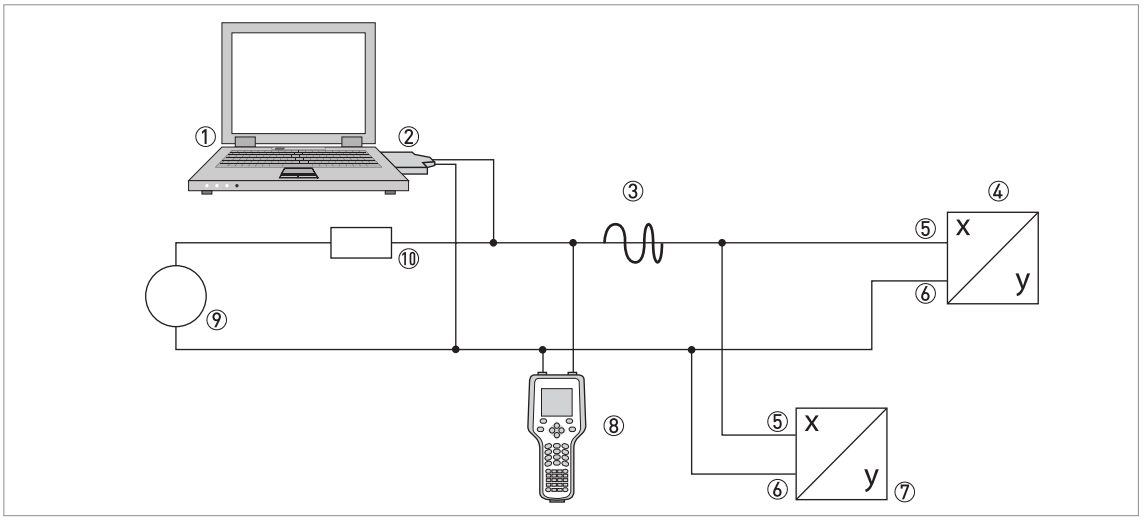

① Primary Master
② HART® modem
③ HART® signal
④ Other HART® devices or this signal converter (see also ⑦)
⑤ Signal converter terminals A (C)
⑥ Signal converter terminals A- (C-)
⑦ Signal converter with address > 0 and passive current output, connection of max. 15 devices (slaves) with 4…20 mA
⑧ Secondary Master
⑨ Power supply
①⓪ Load ≥ 250 Ω (Ohm)

9.3.3 Multi-Drop connection (3-wire connection)

Connection of 2-wire and 4-wire devices in the same network. In order that the current output of the signal converter is working continuously active, an additional third wire must be connected to the devices in the same network. These devices must be powered via a two-wire loop.

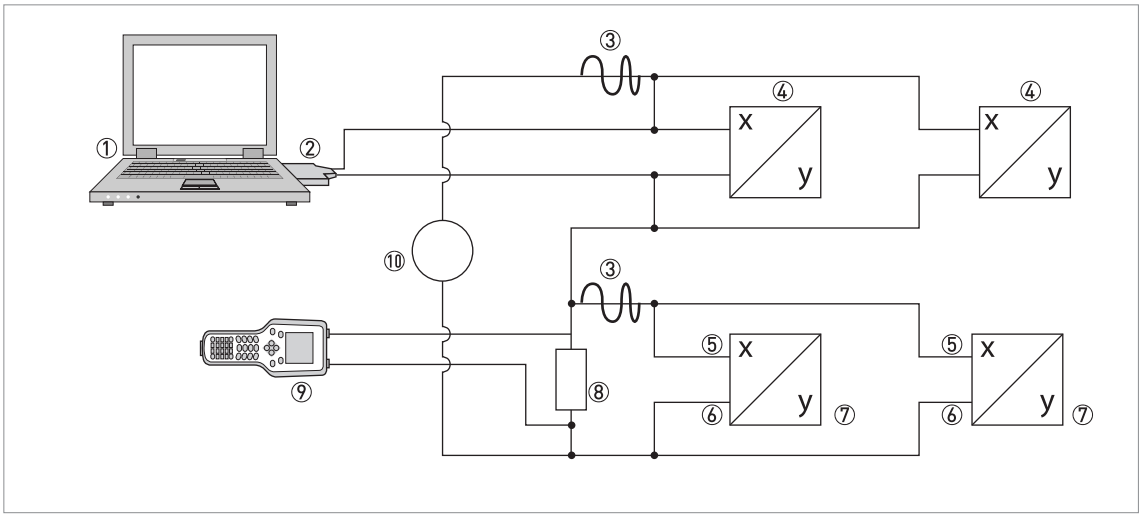

① Primary Master
② HART® modem
③ HART® signal
④ 2-wire external devices (slaves) with 4…20 mA, addresses > 0, powered by current loop
⑤ Signal converter terminals A (C)
⑥ Signal converter terminals A- (C-)
⑦ Connection of active or passive 4-wire devices (slaves) with 4…20 mA, addresses > 0
⑧ Load ≥ 250 Ω (Ohm)
⑨ Secondary Master
①⓪ Power supply

9.4 Inputs/outputs and HART® dynamic variables and device variables

The signal converter is available with various in-/output combinations.

The connection of the terminals A…D to the HART® dynamic variables PV, SV, TV and 4V depends on the device version.

PV = Primary Variable; SV = Secondary Variable; TV = Third Variable; 4V = Fourth Variable

Signal converter version	HART® dynamic variable			
	PV	SV	TV	4V
Basic I/O, connection terminals	A	D	-	-
Modular I/O and Ex i I/O, connection terminals	C	D	A	B

The signal converter can provide up to 10 measured values. The measured values are accessible as so-called HART® device variables and can be connected to the HART® dynamic variables. The availability of these variables depends on the device versions and the settings.

Code = device variable code

Device variables

HART® device variable	Code	Type	Explanations
flow speed	20	linear	
volume flow	21	linear	
mass flow	22	linear	
conductivity	24	linear	
coil temperature	23	linear	
counter 1 (C)	6	totalizer	Valid for Basic I/O option only.
counter 1 (B)	13	totalizer	Valid for Modular I/O and Ex i I/O options only.
counter 2 (D)	14	totalizer	
counter 3 (A)	12	totalizer	Valid for Modular I/O and Ex i I/O options only.
diagnosis value	25	linear	Function and availability depends on diagnosis value setting.

For the dynamic variables connected to the linear analogue outputs for current and/or frequency, the assignment of the device variables takes place by selecting the linear measurement for these outputs under the appropriate function of the signal converter. It follows that the dynamic variables connected to current or frequency outputs can only be assigned to the linear HART® device variables.

The HART® dynamic variable PV is always connected to the HART® current output which is, for example, assigned to the volume flow.

A totalizer device variable can thus not be assigned to the dynamic variable PV because the PV is always connected to the HART® current output.

Such correlations do not exist for dynamic variables not connected to linear analogue outputs. Both linear and totalizer device variables can be assigned.

The totalizer device variables can only be assigned to the dynamic variables SV, TV and 4V if the connected output is not a current or frequency output.

9.5 Parameter for the basic configuration

There are parameters, such as counter 1…2 (optional 3) and a selection of the diagnosis values, that require a warm start for the device following data changes in order to update, for example, dependent unit parameters before other parameters may be written.

Depending on the characteristic of the HART® host system, e.g. online/offline mode, these parameters are treated differently. See the following section for more detailed information.

9.6 Field Communicator 375/475 (FC 375/475)

The Field Communicator is a hand terminal from Emerson Process Management that is designed to configure HART® and Foundation Fieldbus devices. Device Descriptions (DDs) are used to integrate different devices into the Field Communicator.

9.6.1 Installation

The HART® Device Description for the signal converter must be installed on the Field Communicator. Otherwise only the functions of a generic DD are available to the user and the entire device control is not possible. A "Field Communicator Easy Upgrade Programming Utility" is required to install the DDs on the Field Communicator.

The Field Communicator must be equipped with a system card with "Easy Upgrade Option". For details consult the Field Communicator User's Manual.

9.6.2 Operation

INFORMATION!
For more detailed information see Appendix A, Menu tree for Basic DD.

Operating the signal converter via the Field Communicator is very similar to manual device control using the keyboard.

Limitation: The service menu parameters for the device are not supported and a simulation is only possible for current outputs. The online help for each parameter contains its function number as a reference to the local device display.

Parameter protection for custody transfer is the same as on the device's local display. Other specific protective functions such as the passwords for the quick setup menu and the setup menu are not supported with HART®.

The Field Communicator always saves a complete configuration for the exchange with AMS, see Appendix A. However, in the offline configuration and when sending to the device, the Field Communicator only takes into account a partial parameter set (like the standard configuration of the old HART® Communicator 275).

9.6.3 Parameter for the basic configuration

In online mode, counter measurements and the diagnosis value can be set using special methods, see Appendix A. In offline mode, these parameters are read-only. However, when transferring the offline configuration, this data is also written to the device.

9.7 Asset Management Solutions (AMS)

The Asset Management Solutions Device Manager (AMS) is a PC program from Emerson Process Management which is designed to configure and manage HART®, PROFIBUS and Foundation-Fieldbus devices. Device Descriptions (DDs) are used to integrate different devices into the AMS.

9.7.1 Installation

Please read the “readme.txt”, which is also contained in the Installation Kit.

If the signal converter Device Description has not yet been installed on the AMS system, a so-called Installation Kit HART® AMS is required. It is available for download from the website or on CD ROM.

For installation with the Installation Kit refer to the "AMS Intelligent Device Manager Books Online" section "Basic AMS Functionality /Device Configurations / Installing Device Types / Procedures /Install device types from media".

9.7.2 Operation

INFORMATION!
For more detailed information see Appendix B, Menu tree for AMS.

9.7.3 Parameter for the basic configuration

Due to AMS requirements and conventions, there are differences when operating the signal converter with AMS and operating using the local keyboard. The service menu parameters are not supported and simulation is only possible for current outputs. The online help for each parameter contains its function number as a reference to the local device display.

Parameter protection for custody transfer is the same as on the device's local display. Other specific protective functions such as the passwords for the quick setup menu and the setup menu are not supported with HART®.

In online mode, the measurements for counters and diagnosis values can be changed by using the appropriate methods in the basic configuration menu. These parameters are read-only in offline mode.

9.8 Field Device Manager (FDM)

A Field Device Manager (FDM) is basically a PC program from Honeywell used to configure HART®, PROFIBUS and Foundation Fieldbus devices. Device Descriptions (DDs) are used to integrate different devices into the FDM.

9.8.1 Installation

If the signal converter Device Description has not yet been installed on the FDM system, the Device Description is required in binary format and is available for download from the website or on CD ROM.

See the section regarding Managing DDs in the FDM User Guide for information on installing the Device Descriptions in binary format.

9.8.2 Operation

INFORMATION!
For more detailed information see Appendix A, Menu tree for Basic DD.

Operating the signal converter via the Field Device Manager is very similar to manual device control using the keyboard.

Limitation: The Service Menu parameters for the device are not supported and a simulation is only possible for current outputs. The online help for each parameter contains its function number as a reference to the local device display.

Parameter protection for custody transfer is the same as on the device's local display. Other specific protective functions such as the passwords for the quick setup menu and the setup menu are not supported with HART®.

9.9 Process Device Manager (PDM)

The Process Device Manager (PDM) is a Siemens PC program designed to configure HART® and PROFIBUS devices. Device Descriptions (DDs) are used to integrate different devices into the PDM.

9.9.1 Installation

If the signal converter Device Description has not yet been installed on the PDM system, a so-called Device Install HART® PDM is required for the signal converter. This is available for download from the website or on CD-ROM / floppy disk.

For installation under PDM V 5.2, see PDM manual, section 11.1 - Install device / Integrate device into SIMATIC PDM with Device Install.

For installation under PDM V 6.0, see PDM manual, Section 13 - Integrating devices.

Please also read the “readme.txt”, which is also contained in the Installation Kit.

9.9.2 Operation

INFORMATION!
For more detailed information see Appendix C, Menu tree for PDM.

Due to PDM requirements and conventions, there are differences when operating the signal converter with PDM and operating using the local keyboard. Service menu parameters are not supported and a simulation is only possible for current outputs. The online help for each parameter contains its function number as a reference to the device's local display.

Parameter protection for custody transfer is the same as on the device's local display. Other specific protective functions such as the passwords for the quick setup menu and the setup menu are not supported with HART®.

9.9.3 Parameter for the basic configuration

The counter measurements and the diagnosis values can be set directly in the PDM offline table. The dependent unit parameters are automatically updated. However, automatic updating is not possible in online dialogues of the PDM parameter table.

9.10 Field Device Tool / Device Type Manager (FDT / DTM)

A Field Device Tool Container (FDT Container) is basically a PC program used to configure HART®, PROFIBUS and Foundation Fieldbus devices. To adapt to different devices, an FDT container uses a so-called Device Type Manager (DTM).

9.10.1 Installation

If the Device Type Manager for the signal converter has not yet been installed on the Field Device Tool Container, setup is required and is available for download from the website or on CD-ROM. See the supplied documentation for information on how to install and set up the DTM.

9.10.2 Operation

Operating the signal converter via DTM is very similar to manual device control using the keyboard. See also local device display.

9.11 Appendix A: HART® menu tree for Basic-DD

INFORMATION!
The numbering in the following table may change depending on the version of the signal converter!

Abbreviations of the following tables:

- Opt Optional, depending on device version and configuration
- Rd Read only
- Cust Custody lock protection
- Loc Local, affects only DD host views

9.11.1 Overview Basic-DD menu tree (positions in menu tree)

1 dynam. variable	1 measured values	
	2 IO (Inputs/Outputs)	
2 quick setup	1 language	
	2 tag	
	3 reset	
	4 analogue outputs	
	5 digital outputs	
3 test	1 simulation	
	2 information	
4 setup	1 process input	1 calibration
		2 filter
		3 self test
		4 information
		5 sensor limits
	2 I/O	1 hardware
		2 (terminals) A
		3 (terminals) B
		4 (terminals) C
		5 (terminals) D
	3 I/O counter	1 counter 1
		2 counter 2
		3 counter 3 Opt
	4 I/O HART	1 PV is Rd
		2 SV is
		3 TV is
		4 4V is
		5 D/A trim
		6 apply values
		7 HART units
	5 device	1 device info
		2 display
		3 1. meas. page
		4 2. meas. page
		5 graphic page
		6 special functions
		7 units (device)
		8 HART
		9 circuit board info

9.11.2 Basic-DD menu tree (details for settings)

1 dynam. variable

1 measured values	1 volume flow / 2 mass flow / 3 flow speed / 4 conductivity / 5 coil temperature / 6 counter 1 ^{Opt} / 7 counter 2 ^{Opt} / 8 counter 3 ^{Opt} / 9 diagnosis value ^{Opt}
2 Inputs/Outputs	1 A ^{Opt} / 2 % range A ^{Opt} / 3 B ^{Opt} / 4 % range B ^{Opt} / 5 C ^{Opt} / 6 % range C ^{Opt} / 7 D ^{Opt} / 8 % range D ^{Opt}

2 quick setup

1 language	-
2 tag	-
3 reset	1 reset errors / 2 reset counter 1 ^{Opt} / 3 reset counter 2 ^{Opt} / 4 reset counter 3 ^{Opt}
4 analogue outputs	1 measurement A/C ^{Cust} / 2 unit ^{Cust} / 3 range min A/C ^{Cust} / 4 range max A/C ^{Cust} / 5 lfc threshold ^{Cust} / 6 lfc hysteresis ^{Cust} / 7 time constant ^{Cust}
5 digital outputs	1 measurement D $^{Opt, Cust}$ / 2 pulse value unit $^{Opt, Cust}$ / 3 value p. pulse D $^{Opt, Cust}$ / 4 lfc threshold $^{Opt, Cust}$ / 5 lfc hysteresis $^{Opt, Cust}$

3 test

1 simulation	1 simul. current / frequency A ^{Opt} / 2 simul. current / frequency B ^{Opt} / 3 simul. current C ^{Opt} / 4 simul. frequency D
2 information	1 C number / 2 info process input / 3 info device / 4 info display

4 setup

1 process input	1 calibration	1 autom. zero calib. ^{Cust} / 2 zero calibration ^{Cust} / 3 size ^{Cust} / 4 GK selection ^{Cust} / 5 GK / GKH $^{Opt, Cust}$ / 6 GKL $^{Opt, Cust}$ / 7 coil resistance Rsp ^{Cust} / 8 density ^{Cust} / 9 target conduct. ^{Cust} / 10 EF electr. factor ^{Cust} / 11 num. of electrodes ^{Cust} / 12 field frequency ^{Cust} / 13 select settling ^{Cust} / 14 settling time $^{Opt\ Cust}$ / 15 line frequency ^{Cust}
	2 filter	1 limitation min ^{Cust} / 2 limitation max ^{Cust} / 3 flow direction ^{Cust} / 4 time constant / 5 pulse filter ^{Cust} / 6 pulse width $^{Opt, Cust}$ / 7 pulse limitation $^{Opt, Cust}$ / 8 noise filter ^{Cust} / 9 noise level $^{Opt, Cust}$ / 10 noise suppression $^{Opt, Cust}$ / 11 lfc threshold ^{Cust} / 12 lfc hysteresis ^{Cust}
	3 self test	1 empty pipe ^{Cust} / 2 limit empty pipe $^{Opt, Cust}$ / 3 full pipe $^{Opt, Cust}$ / 4 limit full pipe $^{Opt, Cust}$ / 5 linearity ^{Cust} / 6 gain ^{Cust} / 7 coil current ^{Cust} / 8 flow profile ^{Cust} / 9 limit flow profile $^{Opt, Cust}$ / 10 electrode noise ^{Cust} / 11 limit electr. noise $^{Opt, Cust}$ / 12 settling of field ^{Cust} / 13 diagnosis value Rd / 14 select diagnosis

	4 information	1 liner / 2 electr. material / 3 serial no. sensor Rd / 4 V no. sensor Rd / 5 sensor electr. info	
	5 sensor limits	1 volume flow	1 upper snsr limit Rd / 2 lower snsr limit Rd / 3 minimum span Rd
		2 mass flow	
		3 flow speed	
		4 conductivity	
		5 coil temperature	
2 I/O	1 hardware	1 terminals A ^{Cust} / 2 terminals B ^{Cust} / 3 terminals C ^{Cust} / 4 terminals D ^{Cust}	
	2 A 3 B 4 C 5 D	**current output** ^{Opt}: 1 range 0% ^{Cust} / 2 range 100% ^{Cust} / 3 extended range min ^{Cust} / 4 extended range max ^{Cust} / 5 error current ^{Cust} / 6 error condition ^{Cust} / 7 measurement ^{Cust} / 8 range min ^{Cust} / 9 range max ^{Cust} / 10 polarity ^{Cust} / 11 limitation min ^{Cust} / 12 limitation max ^{Cust} / 13 lfc threshold ^{Cust} / 14 lfc hysteresis ^{Cust} / 15 time constant ^{Cust} / 16 special function ^{Cust} / 17 rc threshold $^{Opt, Cust}$ / 18 rc hysteresis $^{Opt, Cust}$ / 19 information	
		frequency output ^{Opt}: 1 pulse shape ^{Cust} / 2 pulse width ^{Cust} / 3 100% pulse rate ^{Cust} / 4 measurement ^{Cust} / 5 range min ^{Cust} / 6 range max ^{Cust} / 7 polarity ^{Cust} / 8 limitation min ^{Cust} / 9 limitation max ^{Cust} / 10 lfc threshold ^{Cust} / 11 lfc hysteresis ^{Cust} / 12 time constant ^{Cust} / 13 invert signal ^{Cust} / 14 special function $^{Opt, Cust}$ / 15 phase shift w.r.t. B $^{Opt, Cust}$ / 16 information	
		pulse output ^{Opt}: 1 pulse shape ^{Cust} / 2 pulse width ^{Cust} / 3 max. pulse rate ^{Cust} / 4 measurement ^{Cust} / 5 pulse value unit / 6 value p. pulse / 7 polarity ^{Cust} / 8 lfc threshold ^{Cust} / 9 lfc hysteresis ^{Cust} / 10 time constant / 11 invert signal ^{Cust} / 12 special function $^{Opt, Cust}$ / 13 phase shift w.r.t. B $^{Opt, Cust}$ / 14 information	
		status output ^{Opt}: 1 mode / 2 output A ^{Opt} / 2 output B ^{Opt} / 2 output C ^{Opt} / 2 output D ^{Opt} / 3 invert signal / 4 information	
		limit switch ^{Opt}: 1 measurement / 2 threshold / 3 hysteresis / 4 polarity / 5 time constant / 6 invert signal / 7 information	
		control input ^{Opt}: 1 mode ^{Cust} / 2 invert signal / 3 information	

3 I/O counter	1 counter 1	1 funct. of counter Cust / 2 measurement Cust / 3 select measurement Opt, Cust / 4 lfc threshold Cust / 5 lfc hysteresis Cust / 6 time constant Cust / 7 preset value Opt, Cust / 8 reset counter Opt, Cust / 9 set counter Opt, Cust / 10 information	
	2 counter 2		
	3 counter 3 Opt		
4 I/O HART	1 PV is Rd / 2 SV is / 3 TV is / 4 4V is / 5 D/A trim Cust / 6 apply values Cust		
5 device	1 device info	1 tag / 2 C number Rd / 3 device serial no. Rd / 4 electronic serial no. Rd / 5 SW.REV.MS / 6 circuit board info	
	2 display	1 language / 2 default display / 3 SW.REV.UIS	
	3 1. meas. page 4 2. meas. page	1 function Cust / 2 measurement 1.line Cust / 3 range min Cust / 4 range max Cust / 5 limitation min / 6 limitation max / 7 lfc threshold / 8 lfc hysteresis / 9 time constant / 10 format 1.line / 11 measurement 2.line Cust / 12 format 2.line Cust / 13 measurement 3.line Cust / 14 format 3.line Cust	
	5 graphic page	1 select range / 2 range centre / 3 range +/- / 4 time scale	
	6 special functions	1 list errors / 2 reset errors / 3 warmstart	
	7 units (device)	1 volume flow Cust / 2 mass flow Cust / 3 flow speed Cust / 4 conductivity Cust / 5 temperature Cust / 6 volume Cust / 7 mass Cust / 8 density Cust	
	8 HART	1 address	
		2 message	
		3 description	
		4 units (HART)	1 volume flow
		5 formats (HART)	2 mass flow
			3 flow speed
			4 conductivity
			5 temperature
			6 counter 1
			7 counter 2
			8 counter 3 Opt
			9 diagnosis value

		6 device info	1 manufacturer Rd
			2 model Rd
			3 device ID Rd
			4 tag
			5 date
			6 write protect Rd
			7 final assembly no.
			8 sensor serial no.
			9 revision no. 1 universal rev. Rd 2 device rev. Rd 3 software rev. Rd 4 hardware rev. Rd
		7 preambles	1 request preams Rd
			2 response preams
		8 master reset	
		9 prepare download	
	9 circuit board info		

9.12 Appendix B: HART® menu tree for AMS

Abbreviations of the following tables:

- Opt Optional, depending on device version and configuration
- Rd Read only
- Cust Custody lock protection
- Loc Local AMS, affects only AMS views

9.12.1 Overview AMS menu tree (positions in menu tree)

configuration	quick setup	
	sensor	
	input calibration	
	input filter	
	self test / info	
	I/O terminals A/B/C/D	current output
		frequency output
		pulse output
		status output
		limit switch
		control input
	counter	counter 1
		counter 2
		counter 3
	device	
	1. meas. page / graphic page / 2. meas. page	
	HART	
	HART units	
Compare		
Clear Offline		
Status	Overview	
	Failure (device)	
	Failure (application)	
	Out of specification	
	Check request & Information	
Process Variables	process values	
	counter	
	outputs	
	device	
	HART	
Scan Device		
Calibration Management		

Diagnostics and Test
Calibrate
Reset
Basic Configuration
Rename
Unassign
Assign / Replace
Audit Trail
Record Manual Event
Drawings / Notes
Help...

9.12.2 AMS menu tree (details for settings)

Configure

quick setup	device	language / tag	
	current output A/C	measurement A/C Cust / unit A/C Cust / time constant A/C Cust / range max A/C Cust / range min A/C Cust / lfc threshold Cust / lfc hysteresis Cust	
	pulse output D	measurement D Opt, Cust / pulse value unit Opt, Cust / value p. pulse Opt, Cust / lfc threshold Opt, Cust / lfc hysteresis Opt, Cust	
sensor	limits for...	volume flow	upper snsr limit Rd / lower snsr limit Rd / minimum span Rd
		mass flow	
		flow speed	
		conductivity	
		coil temperature	
input calibration	zero calibration Cust / size Cust / GK selection Cust / GK / GKH Opt, Cust / GKL Opt, Cust / coil resistance Rsp Cust / density Cust / target conduct. Cust / EF electr. factor Cust / num. of electrodes Cust / field frequency Cust / select settling Cust / settling time Opt, Cust / line frequency Cust		
input filter	limitation min Cust / limitation max Cust / flow direction Cust / time constant Cust / pulse filter Cust / pulse width Cust / pulse limitation Cust / noise filter Cust / noise level Cust / noise suppression Opt, Cust / lfc threshold Cust / lfc hysteresis Cust		
self test / info	self test	empty pipe Cust / limit empty pipe Opt, Cust / full pipe Opt, Cust / limit full pipe Opt, Cust / linearity Cust / gain Cust / coil temperature Cust / flow profile Cust / limit flow profile Opt, Cust / electrode noise Cust / limit electr. noise Opt, Cust / settling of field Cust / diagnosis value Rd	
	information	liner / electr. material / serial no. sensor Rd / V no. sensor Rd /	

I/O terminals A/B/C/D	current output Opt	range 0% Cust / range 100% Cust / extended range min Cust / extended range max Cust / error current Cust / error condition Cust / measurement Cust / range min Cust / range max Cust / polarity Cust / limitation min Cust / limitation max Cust / lfc threshold Cust / lfc hysteresis Cust / time constant Cust / special function Cust / rc threshold Opt, Cust / rc hysteresis Opt, Cust
	frequency output Opt	pulse shape Cust / pulse width Cust / 100% pulse rate Cust / measurement Cust / range min Cust / range max Cust / polarity Cust / limitation min Cust / limitation max Cust / lfc threshold Cust / lfc hysteresis Cust / time constant Cust / invert signal Cust / special function Opt, Cust / phase shift w.r.t. B Opt, Cust
	pulse output Opt	pulse shape Cust / pulse width Cust / max. pulse rate Cust / measurement Cust / pulse value unit / value p. pulse / polarity Cust / lfc threshold Cust / lfc hysteresis Cust / time constant / invert signal Cust / special function Opt, Cust / phase shift w.r.t. B Opt, Cust
	status output Opt	mode / output A Opt / output B Opt / output C Opt / output D Opt / invert signal
	limit switch Opt	measurement / threshold / hysteresis / polarity / time constant / invert signal
	control input Opt	mode Cust / invert signal
counter	counter 1	function Cust / measurement Opt, Cust / lfc threshold Opt, Cust / lfc hysteresis Opt, Cust / time constant Opt, Cust / preset value Opt, Cust
	counter 2	
	counter 3 Opt	
device	device info	tag / C number Rd / device serial no. Rd / electronic serial no. Rd
	display	language / default display Cust
	units	volume flow Cust / mass flow Cust / flow speed Cust / conductivity Cust / temperature Cust / volume Cust / mass Cust / density Cust
1. and 2. meas. page graphic page	1. and 2. meas. page	function Cust / measurement 1.line Cust / range min Cust / range max Cust / limitation min / limitation max / lfc threshold / lfc hysteresis / time constant / format 1.line / measurement 2.line Cust / format 2.line Cust / measurement 3.line Cust / format 3.line Cust
	graphic page	select range / range centre / range +/- / time scale

HART	identification	manufacturer Rd / model Rd / device ID Rd / address / tag / date / message / description / write protect Rd / final assembly no. / sensor serial no.
	revision numbers	universal rev. Rd / device rev. Rd / software rev. Rd / hardware rev. Rd
	preambles	request preams Rd / response preams
	dynamic variables	PV is Rd / SV is / TV is / 4V is
HART units	display formats	volume flow Loc / mass flow Loc / flow speed Loc / conductivity Loc / temperature Loc / counter 1 Loc / counter 2 Loc / counter 3 Opt, Loc / diagnosis value Opt, Loc
	units	volume flow / mass flow / flow speed / conductivity / temperature / counter 1 / counter 2 / counter 3 Opt

Compare and Clear Offline

Status

Overview	Standard	Primary variable out of limits
		Non-primary variable out of limits
		Primary variable analogue output saturated
		Primary variable analogue output fixed
		Cold start
		Field device malfunction
		Configuration changed
Failure (device)	F error in device / F IO1 / F parameter / F IO2 / F configuration / F display / F sensor electronic / F sensor global / F sensor local / F field current local / F current in-/output A / F current in-/output B / F current output C / F software user interface / F hardware settings / F hardware detection / F RAM/ROM error IO1 / F RAM/ROM error IO2	
Failure (application)	F application error / F empty pipe / F flow rate too high / F field frequency too high / F DC offset / F open circuit A / F open circuit B / F open circuit C / F over range A (current) / F over range B (current) / F over range C (current) / F over range A (pulse) / F over range B (pulse) / F over range C (pulse) / F active settings / F factory settings / F backup 1 settings / F backup 2 settings	
Out of specification	S out of specification / S pipe not full / S pipe empty / S linearity / S flow profile / S electrode noise / S gain error / S electrode symmetry / S field coil broken / S field coil bridged / S field current deviation / S field frequency too high / S electronic temperature / S coil temperature / S overflow counter 1 / S overflow counter 2 / S overflow counter 3 / S backplane invalid	
Check request & Information	check request	C checks in progress / C test sensor
	information	I counter 1 stopped / I counter 2 stopped / I counter 3 stopped / I power fail / I control input A active / I control input B active / I over range display 1 / I over range display 2 / I backplane sensor / I backplane settings / I backplane difference / I optical interface

Process Variables

process values	volume flow / mass flow / flow speed / conductivity / coil temperature / diagnosis value ^{Opt}
counter	counter 1 ^{Opt} / counter 2 ^{Opt} / counter 3 ^{Opt}
outputs	A ^{Opt} / % range A ^{Opt} / B ^{Opt} / % range B ^{Opt} / C ^{Opt} / % range C ^{Opt} / D ^{Opt} / % range D ^{Opt} /
device	tag Rd / description Rd
HART	polling address Rd / device ID Rd

Scan Device

Calibration Management

Diagnostics and Test

	simulation A $^{Opt, Cust}$ / simulation B $^{Opt, Cust}$ / simulation C$^{Opt, Cust}$ / simulation D $^{Opt, Cust}$ / circuit board info

Calibrate

	autom. zero calibration ^{Cust} / D/A trim ^{Cust} / apply values ^{Cust}

Reset

	reset errors / reset configuration changed flag / master reset / warmstart / reset counter 1 ^{Cust} / set counter 1 ^{Cust} / reset counter 2 ^{Cust} / set counter 2 ^{Cust} / reset counter 3 ^{Cust} / set counter 3 ^{Cust}

Basic Configuration

	select measurement counter 1 / select measurement counter 2 / select measurement counter 3 ^{Opt} / select diagnosis value

Rename

Unassign

Assign / Replace

Audit Trail

Record Manual Event

Drawings / Notes

Help...

9.13 Appendix C: HART® menu tree for PDM

Abbreviations of the following tables:

- Opt Optional, depending on device version and configuration
- Rd Read only
- Cust Custody lock protection
- Loc Local PDM, affects only PDM views

9.13.1 Overview PDM menu tree (positions in menu tree)

Overview: Menu Device

Communication Path
Load To Device
Load To PG/PC
Set Address
Test
Reset
Calibration
HART

Overview: Menu View

display	display
	counter
Yt diagram	
outputs	current output/frequency output A Opt
	current output/frequency output B Opt
	current output C Opt
	frequency output D Opt
Device Status	Device
	HART
	Standard (overview)
	Failure (device)
	Failure (application)
	Out of specification
	Check request
	Information
Circuit board info	
Toolbar	
Status Bar	
Update	

Overview: PDM parameter table

identification	operation unit	
	device	
input	calibration	
	filter	
	self test	
	information	
	measuring limits	volume flow
		mass flow
		flow speed
		conductivity
		coil temperature
I/O	A Opt	
	B Opt	
	C Opt	
	D Opt	
	counter 1	
	counter 2	
	counter 3 Opt	
Human machine interface	local display	1. and 2. meas. page
		graphic page
	units (device)	
	units (HART)	
	formats (HART)	

9.13.2 PDM menu tree (details for settings)

Menu Device

Communication Path		
Load To Device		
Load To PG/PC		
Set Address		
Test	simulation current output/frequency output A Opt, Cust	
	simulation current output/frequency output B Opt, Cust	
	simulation current output C Opt, Cust	
	simulation frequency output D Opt, Cust	
reset	<reset errors>	
	<reset configuration changed flag>	
	<master reset>	
	<warmstart>	
	<reset counter 1> Cust	
	<set counter 1> Cust	
	<reset counter 2> Cust	
	<set counter 2> Cust	
	<reset counter 3> Opt, Cust	
	<set counter 3> Opt, Cust	
calibration	autom. zero calibration Cust	
	D/A trim Cust	
	apply values Cust	
HART	preambles	request preams Rd / response preams
	dynamic variables settings	PV is Rd / SV is / TV is / 4V is

Menu View

display	volume flow / mass flow / flow speed / conductivity / coil temperature / diagnosis value / device status		
counter	counter 1 Opt / counter 2 Opt / counter 3 Opt /		
Yt diagram	volume flow Opt / mass flow Opt		
outputs	current output /frequency output A Opt		measured value Opt / A Opt / % range A Opt
	current output/frequency output B Opt		measured value Opt / B Opt / % range BOpt
	current output C Opt		measured value Opt / C Opt / % range C Opt
	frequency output D Opt		measured value Opt / D Opt / % range D Opt
Device Status	device	C number Rd / device serial no. Rd / electronic serial no. Rd	
	HART	tag / manufacturer Rd / write protect Rd / model Rd / device ID / universal rev. Rd / device rev. Rd / software rev. Rd / hardware rev. Rd / date Rd / final assembly no. Rd / sensor serial no. Rd	
	Standard (overview)	Primary variable out of limits	
		Non-primary variable out of limits	
		Primary variable analogue output saturated	
		Primary variable analogue output fixed	
		Cold start	
		Configuration changed	
		Field device malfunction	
	Failure (device)	F error in device / F IO1 / F parameter / F IO2 / F configuration / F display / F sensor electronic / F sensor global / F sensor local / F field current local / F current in-/output A / F current in-/output B / F current output C / F software user interface / F hardware settings / F hardware detection / F RAM/ROM error IO1 / F RAM/ROM error IO2	
	Failure (application)	F application error / F empty pipe / F flow rate too high / F field frequency too high / F DC offset / F open circuit A / F open circuit B / F open circuit C / F over range A (current) / F over range B (current) / F over range C (current) / F over range A (pulse) / F over range B (pulse) / F over range D (pulse) / F active settings / F factory settings / F backup 1 settings / F backup 2 settings	
	Out of specification	S out of specification / S pipe not full / S pipe empty / S linearity / S flow profile / S electrode noise / S gain error / S electrode symmetry / S field coil broken / S field coil bridged / S field current deviation / S field frequency too high / S electronic temperature / S coil temperature / S overflow counter 1 / S overflow counter 2 / S overflow counter 3 / S backplane invalid	
	check request	C checks in progress / C test sensor	

	Information	I counter 1 stopped / I counter 2 stopped / I counter 3 stopped / I power fail / I control input A active / I control input B active / I over range display 1 / I over range display 2 / I backplane sensor / I backplane settings / I backplane difference / I optical interface

Circuit board info

Toolbar

Status Bar

Update

PDM parameter table

identification

operation unit	tag / description / message
device	C number Rd / device serial no. Rd / electronic serial no. Rd / manufacturer Rd / model Rd / device ID Rd / universal rev. Rd / device rev. Rd / software rev. Rd / hardware rev. Rd / date / final assembly no. / sensor serial no.

input

calibration	zero calibration Cust / size Cust / GK selection Cust / GK / GKH Opt, Cust / GKL Opt, Cust / density Cust / target conductivity Cust / EF electr. factor Cust / num. of electrodes Cust / field frequency Cust / select settling Cust / settling time Opt, Cust / line frequency Cust	
filter process input	limitation min Cust / limitation max Cust / flow direction Cust / time constant / pulse filter Cust / pulse width Opt, Cust / pulse limitation Opt, Cust / noise filter Cust / noise level Opt, Cust / noise suppression Opt, Cust / lfc threshold Cust / lfc hysteresis Cust	
self test	empty pipe Cust / limit empty pipe Opt, Cust / full pipe Opt, Cust / limit full pipe Opt, Cust / linearity Cust / gain Cust / coil current Cust / flow profile Cust / limit flow profile Opt, Cust / electrode noise Cust / limit electr.noise Opt, Cust / settling of field Cust / diagnosis value	
information	liner / electr. material / serial no. sensor Rd / V no. sensor Rd	
Measuring limits for ...	... volume flow	upper sensr limit Rd / lower sensr limit Rd / minimum span Rd
	... mass flow	
	... flow speed	
	... conductivity	
	... coil temperature	

I/O

I/O	terminals A ^{Cust} / terminals B ^{Cust} / terminals C ^{Cust} / terminals D ^{Cust}		
A / B / C / D ^{Opt}	current output ^{Opt}	range 0% ^{Cust} / range 100% ^{Cust} / extended range min ^{Cust} / extended range max ^{Cust} / error current ^{Cust} / error condition ^{Cust} / measurement ^{Cust} / range min ^{Cust} / range max ^{Cust} / polarity ^{Cust} / limitation min ^{Cust} / limitation max ^{Cust} / lfc threshold ^{Cust} / lfc hysteresis ^{Cust} / time constant ^{Cust} / special function ^{Cust} / rc threshold $^{Opt, Cust}$ / rc hysteresis $^{Opt, Cust}$	
	frequency output ^{Opt}	pulse shape ^{Cust} / pulse width ^{Cust} / 100% pulse rate ^{Cust} / measurement ^{Cust} / range min ^{Cust} / range max ^{Cust} / polarity ^{Cust} / limitation min ^{Cust} / limitation max ^{Cust} / lfc threshold ^{Cust} / lfc hysteresis ^{Cust} / time constant / invert signal ^{Cust} / special function $^{Opt, Cust}$ / phase shift w.r.t. B $^{Opt, Cust}$	
	pulse output ^{Opt}	pulse shape ^{Cust} / pulse width ^{Cust} / max pulse rate ^{Cust} / measurement ^{Cust} / pulse value unit / value p. pulse / polarity ^{Cust} / lfc threshold ^{Cust} / lfc hysteresis ^{Cust} / time constant / invert signal ^{Cust} / special function $^{Opt, Cust}$ / phase shift w.r.t. B $^{Opt, Cust}$	
	status output ^{Opt}	mode / output A ^{Opt} / output B ^{Opt} / output C ^{Opt} / output D ^{Opt} / invert signal /	
	limit switch ^{Opt}	measurement / threshold / hysteresis / polarity time constant / invert signal	
	control input ^{Opt}	mode ^{Cust} / invert signal	
	counter	counter 1	function ^{Cust} / measurement ^{Opt} / lfc threshold ^{Opt} / lfc hysteresis ^{Opt} / time constant ^{Opt} / preset value ^{Opt}
		counter 2	
		counter 3 ^{Opt}	

Human machine interface

local display	language / default display ^{Opt}	
1. and 2. meas. page	function ^{Cust} / measurement 1.line ^{Cust} / range min ^{Cust} / range max ^{Cust} / limitation min / limitation max / lfc threshold / lfc hysteresis / time constant / format 1.line / measurement 2.line ^{Cust} / format 2.line ^{Cust} / measurement 3.line ^{Cust} / format 3.line ^{Cust}	
graphic page	select range / range centre / range +/- / time scale	
units (device)	unit for ...	volume flow ^{Cust} / mass flow ^{Cust} / flow speed / conductivity / temperature / volume ^{Cust} / mass ^{Cust} / density ^{Cust}
units (HART)	unit for ...	volume flow / mass flow / flow speed / conductivity / coil temperature / counter 1 / counter 2 / counter 3 ^{Opt}
formats (HART)	format for ...	volume flow ^{Loc} / mass flow ^{Loc} / flow speed ^{Loc} / conductivity ^{Loc} / coil temperature ^{Loc} / counter 1 ^{Loc} / counter 2 ^{Loc} / counter 3 $^{Opt, Loc}$ / diagnosis value $^{Opt, Loc}$

KROHNE product overview

- Electromagnetic flowmeters
- Variable area flowmeters
- Ultrasonic flowmeters
- Mass flowmeters
- Vortex flowmeters
- Flow controllers
- Level meters
- Temperature meters
- Pressure meters
- Analysis products
- Measuring systems for the oil and gas industry
- Measuring systems for sea-going tankers

Head Office KROHNE Messtechnik GmbH
Ludwig-Krohne-Str. 5
D-47058 Duisburg (Germany)
Tel.:+49 (0)203 301 0
Fax:+49 (0)203 301 10389
info@krohne.de

The current list of all KROHNE contacts and addresses can be found at:
www.krohne.com

© KROHNE 08/2010 - 4000069803 - MA IFC 300 R04 en - Subject to change without notice.