Glass level gauges
Model LGG

Applications

- Continuous level indication without auxiliary power
- Direct indication of the level
- Individual design and corrosion-resistant materials make the products suitable for a broad range of applications
- Chemical industry, petrochemical industry, oil and natural gas extraction (on- and offshore), shipbuilding, machine building, power generating equipment, power plants
- Oil and gas, heat transfer and refrigeration systems, plants for cryogenics

Special features

- Process- and procedure-specific production
- Operating limits:
  - Operating temperature: -196 ... +374 °C 1) [-320.8 … +705.2 °F]
  - Operating pressure: Vacuum to 250 bar [3,625.9 psi]
- Wide variety of different process connections and materials
- Illumination optional
- Heating and/or insulation optional

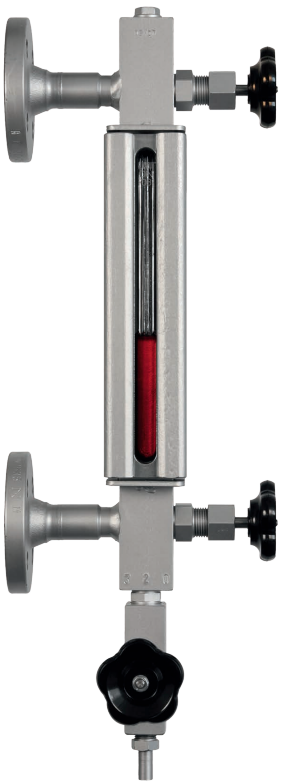

Compact version with side pieces, model LGG-E

Description

The main element of the glass level gauge is the gauge body. Incorporated into this gauge body are the liquid channel (if necessary the heating channel) and the seating faces for the chambered seals and sight glasses.

Onto the gauge body are mounted, or are already integrated, the valve heads and process connections. Drain or vent are also possible.

The glasses and/or mica shields as well as the seals are fitted, secured and sealed with the aid of U-bolts and covers or pressure frames. Glasses from borosilicate glass in accordance with DIN 7081 are used.

For steam, the glasses can be used to 243 °C [469.4 °F], with mica design to 300 °C [572 °F]. For other media, temperatures to 300 °C are possible, in special cases to 374 °C [705.2 °F]. The use of mica is needed for specific applications.

Smart in sensing

Functional principle

Reflex glasses per DIN 7081
In the viewing direction, incident light strikes the reflective grooves of the sight glass plate and is refracted into the liquid present. With gases, the light is reflected. Thus the level is visible as a dark column, the gaseous area as a silvery column over it.
Reflex glasses are very well suited for the indication of clear liquids.

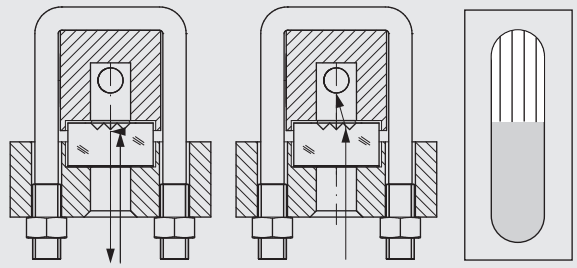

Transparent glasses per DIN 7081
From the rear, incident light passes through both sight glass plates with the medium between them. The level is visible as a line (meniscus) or directly due to the liquid itself.

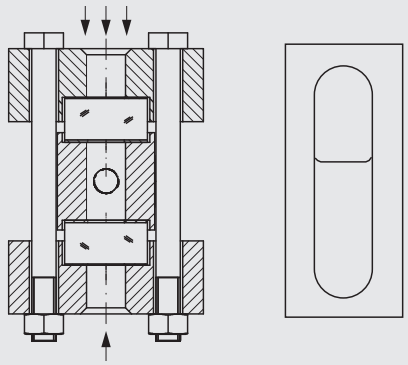

Refraction principle with mica shields
From the rear, incident light from a lamp passes through both mica shields with the medium between them. The lamp and medium are arranged at an angle. In the gaseous phase, the light passes directly through, with liquid, the light is refracted sideways. Thus the level is visible as a black column, the gaseous area as a light column over it.

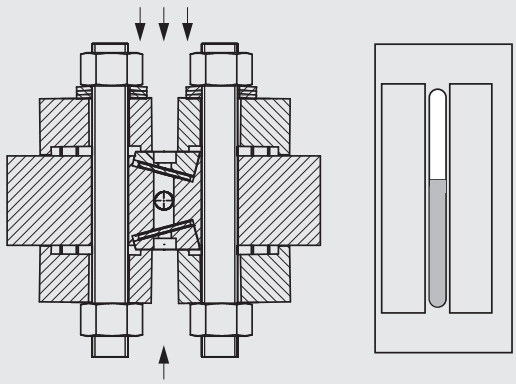

If unprotected sight glasses are used in boiler systems with aqueous media, high temperatures and high pH values can lead to increased glass erosion. The effect of glass corrosion is increased with the introduction of chemical additives, such as in water treatment. The geometric changes to the sight glass resulting from the erosion lead to risks in the operational safety.

For temperatures from 243 °C [469.4 °F], WIKA recommends the use of transparent glasses with mica design. These prevent chemical attack at high water temperatures on the otherwise unprotected glass.

Construction of glass level gauges

Gauge body
Base body of the glass level gauge, contains the liquid channel

Cover
For the clamping of the sight glass plates

Flat gasket
Chambered sealing between the liquid channel and the environment

Glass
Sight glass plates per DIN 7081 from borosilicate glass

Cushion
Mechanical protection between cover and glass

U-bolt, nut
Hold the forces from the internal pressure

Glass size
Standard lengths L of sight glass plates per DIN 7081, width 34 mm [1,34 in], thickness 17 mm [0,67 in]

Visible length SL
The entire visible length in the sight glass, glass separations are included

Individual visible length ESL
Visible range of a single segment

Segment
Field of view consisting of a single sight glass plate

Glass separation A
Non-visible range, results from the linking together of segments

Example

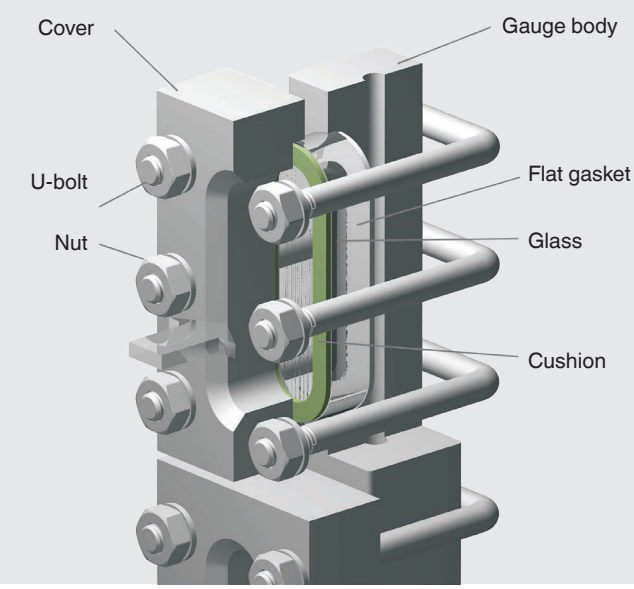

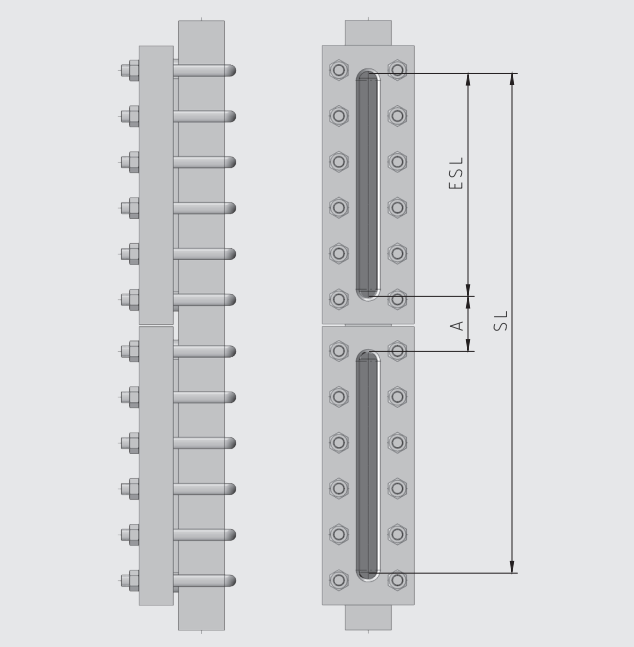

Glass sizes and visible lengths

Length in mm [in]	Glass size									
	2	3	4	5	6	7	8	9	10	11
L	140 [5.5]	165 [6.5]	190 [7.5]	220 [8.7]	250 [9.8]	280 [11.0]	320 [12.6]	340 [13.4]	370 [14.6]	400 [15.7]
ESL	120 [4.7]	145 [5.7]	170 [6.7]	200 [7.9]	230 [9.1]	260 [10.2]	300 [11.8]	320 [12.6]	350 [13.8]	380 [15.0]

Number of segments	Visible length SL in mm [in]									
1	120 [4.7]	145 [5.7]	170 [6.7]	200 [7.9]	230 [9.1]	260 [10.2]	300 [11.8]	320 [12.6]	350 [13.8]	380 [15.0]
2	285 [11.2]	335 [13.2]	385 [15.2]	445 [17.5]	505 [19.9]	565 [22.2]	645 [25.4]	685 [27.0]	745 [29.3]	805 [31.7]
3	450 [17.7]	525 [20.7]	600 [23.6]	690 [27.2]	780 [30.7]	870 [34.3]	990 [39.0]	1,050 [41.3]	1,140 [44.9]	1,230 [48.4]
4	615 [24.2]	715 [28.1]	815 [32.1]	935 [36.8]	1,055 [41.5]	1,175 [46.3]	1,335 [52.6]	1,415 [55.7]	1,535 [60.4]	1,655 [65.2]
5	780 [30.7]	905 [35.6]	1,030 [40.6]	1,180 [46.5]	1,330 [52.4]	1,480 [58.3]	1,680 [66.1]	1,780 [70.1]	1,930 [76.0]	2,080 [81.9]
6	945 [37.2]	1,095 [43.1]	1,245 [49.0]	1,425 [56.1]	1,605 [63.2]	1,785 [70.3]	2,025 [79.7]	2,145 [84.4]	2,325 [91.5]	2,505 [98.6]
7	1,110 [43.7]	1,285 [50.6]	1,460 [57.5]	1,670 [65.7]	1,880 [74.0]	2,090 [82.3]	2,370 [93.3]	2,510 [98.8]	2,720 [107.1]	2,930 [115.4]

Matrix valid for glass separation A = 45 mm [1.77 in]

The visible length SL can deviate from the specified value by ±3 mm [± 0.12 in] due to construction.

Valve heads

Valve heads isolate the vessel from the glass level gauge. They consist of the valve body and the head piece. They are actuated by a valve with quick closing lever or handwheel. In general, they are fitted with a ball-check valve as a safety element.

Valve body

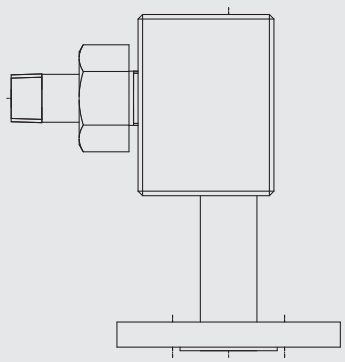

Head piece

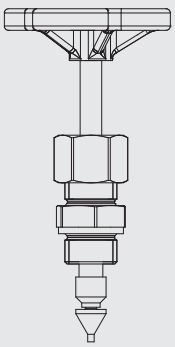

Valve with quick closing lever

Open anticlockwise

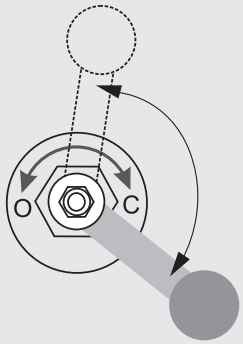

Valve with handwheel

Open anticlockwise

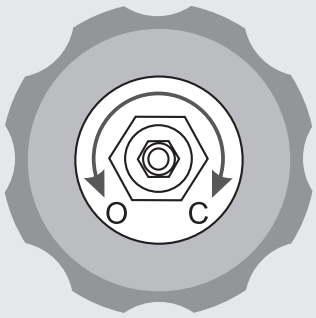

Ball-check valve

The ball-check valve should prevent any major spillage from the glass level gauge in the event of any glass or mica breakage or other sizable leakage. For this purpose there is, under the valve seat, a ball within a recess. As soon as the indicator starts to leak, the incipient flow lifts the ball from the recess and forces it against the valve seat (pressure > 0.5 bar [7.25 psi]). In this way, the flow is sharply reduced. The closing of the valve presses the ball back into its starting position.

Illustration of the ball-check valve principle

Situation in normal operation

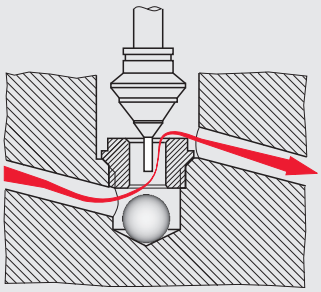

Ball-check valve on glass break

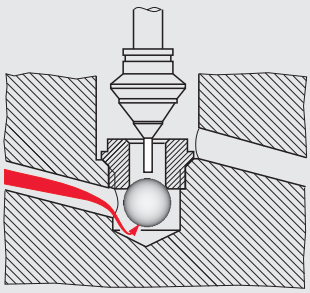

Situation during commissioning

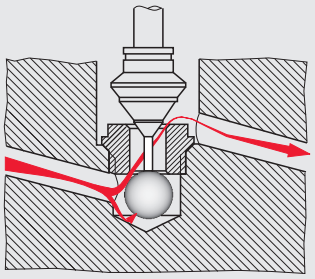

Model overview

Glass level gauges	Material	Indication	Max. pressure in bar [psi]	Temperature range in °C [°F]	Glass size in mm	Number of segments
Reflex indicator						
"Carbon-Line" version, model LGG-RP	Steel A350LF2	Sight glass	100 [1,450.4]	-40 ... +300 [-40 … +572]	4 ... 9	1 ... 5
Compact version with side pieces, model LGG-E	Steel 1.0460/1.0570	Sight glass	40 [580.2]	-10 ... +300 [+14 … +572]	2 ... 11	1 ... 3
Standard version, model LGG-RE	Steel 1.0570 (A350LF2)	Sight glass	160 [2320.6]	-10 ... +300 [+14 … +572]	2 ... 11	1 ... 5
	Stainless steel 1.4404 (316L)			-196 ... +300 [-320.8 … +572]		
High-pressure version, model LGG-RI	Steel 1.5415 (15Mo3)	Sight glass	250 [3625.9]	-10 ... +100 [+14 … +212]	2 ... 9	1 ... 5
	Stainless steel 1.4404 (316L)			-196 ... +100 [-320.8 … +212]		
Weld-in version, model LGG-WR	Steel 1.0570 (A350LF2)	Sight glass	40 [580.2]	-10 ... +300 [+14 … +572]	2 ... 9	1
	Stainless steel 1.4404 (316L)			-196 ... +300 [-320.8 … +572]		
Transparent indicator						
"Carbon-Line" version, model LGG-TP	Steel A350LF2	Glass (mica)	100 [1,450.4]	-40 ... +300 [-40 … +572]	4 ... 9	1 ... 5
Standard version, model LGG-TE	Steel 1.0570 (A350LF2)	Glass (mica)	160 [2320.6]	-10 ... +300 [+14 … +572]	2 ... 11	1 ... 5
	Stainless steel 1.4404 (316L)			-196 ... +300 [-320.8 … +572]		
High-pressure version, model LGG-TI	Steel 1.5415 (15Mo3)	Glass (mica)	250 [3625.9]	-10 ... +100 [+14 … +212]	2 ... 9	1 ... 5
	Stainless steel 1.4404 (316L)			-196 ... +100 [-320.8 … +212]		
Superheated steam version, model LGG-T3	Steel 1.5415 (15Mo3)	Glass + mica	160 [2320.6]	-10 ... +100 [+14 … +212]	2 ... 9	1 ... 5
	Stainless steel 1.4404 (316L)			-196 ... +300 [-320.8 … +572]		
Weld-in version, model LGG-WT	Steel 1.0570 (A350LF2)	Glass (mica)	40 [580.2]	-10 ... +300 [+14 … +572]	2 ... 9	1
	Stainless steel 1.4404 (316L)			-196 ... +300 [-320.8 … +572]		
Glass tube, standard, Model LGG-GA	Brass	Glass tube 13 mm [0.51 in]	10 [145]	-10 ... +120 [+14 … +248]	110 ... 1,200 mm [4.3 … 47.2 in]	1
	Stainless steel 1.4571 (316Ti)			-10 ... +200 [+14 … +392]		
Glass tube, for large lengths with interposing glass-holder, model LGG-GB	Stainless steel 1.4404 (316L)	Glass tube 16 mm [0.63 in]	25 [362.6]	-10 ... +200 [+14 … +392]	150 ... 4,500 mm [5.9 … 177.2 in]	1 ... 3
Refraction indicator						
Highest-pressure version, model LGG-M	Steel 1.5415 (15Mo3)	Mica	160/250 [2320.6/ 3625.9]	-10 ... +374 [+14 … +705.2]	2 ... 11	1 ... 9

Examples

Model LGG-RP

Model LGG-E

Model LGG-TE

Model LGG-RI

Model overview of valve heads

Valve head	Material		Max. pressure in bar	Operation	Ball-check valve	Mount	Thru-way
	Valve body	Head piece					
Glass tube fitting with handwheel, model LGV-01	Stainless steel	Stainless steel	PN 250	Handwheel	Yes	Top, bottom	Offset
Glass tube fitting with quick closing lever, model LGV-03	Stainless steel	Stainless steel	PN 100	Quick closing lever	Yes	Top, bottom	Offset
Compact glass tube fitting without valve, model LGV-04	Stainless steel	Stainless steel	PN 10	Without	No	Top, bottom	Angled
Glass tube fitting compact with handwheel, model LGV-05	■ Brass ■ Stainless steel	Without	PN 10	Handwheel	No	Top, bottom	Angled
Double valve, model LGV-18	Steel 15Mo3	Stainless steel	PN 160	Double handwheel/double lever	Yes	Lateral	Angled
Double valve, high pressure, model LGV-19	Steel 15Mo3	Stainless steel	PN 250	Double handwheel/double lever	Yes	Lateral	Angled
Forged valve with handwheel, model LGV-33	Steel A350LF2, nitrocarburised	Stainless steel	PN 250	Handwheel	Yes	Top, bottom	Offset
Straight valve with handwheel, model LGV-51, LGV-71	■ Steel ■ Stainless steel	Stainless steel	PN 250	Handwheel	Yes	Lateral, back	Straight
Angled valve with handwheel, model LGV-52, LGV-72	■ Steel ■ Stainless steel	Stainless steel	PN 250	Handwheel	Yes	Lateral	Angled
Offset valve with handwheel, model LGV-53, LGV-73	■ Steel ■ Stainless steel	Stainless steel	PN 250	Handwheel	Yes	Top, bottom	Offset
Straight valve with quick closing lever, model LGV-56	■ Steel ■ Stainless steel	Stainless steel	PN 100	Quick closing lever	Yes	Lateral, back	Straight
Angled valve with quick closing lever, model LGV-57	■ Steel ■ Stainless steel	Stainless steel	PN 100	Quick closing lever	Yes	Lateral	Angled
Offset valve with quick closing lever, model LGV-58	■ Steel ■ Stainless steel	Stainless steel	PN 100	Quick closing lever	Yes	Top, bottom	Offset

Examples

Model LGV-33

Model LGV-57

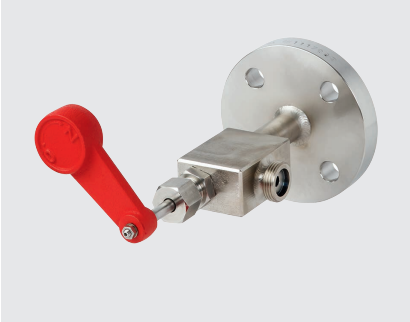

Model LGV-51

Valve head arrangement

The valve arrangement is always specified in relation to the viewing direction.

Rotatable field of view

Offset valve
Top and bottom mount

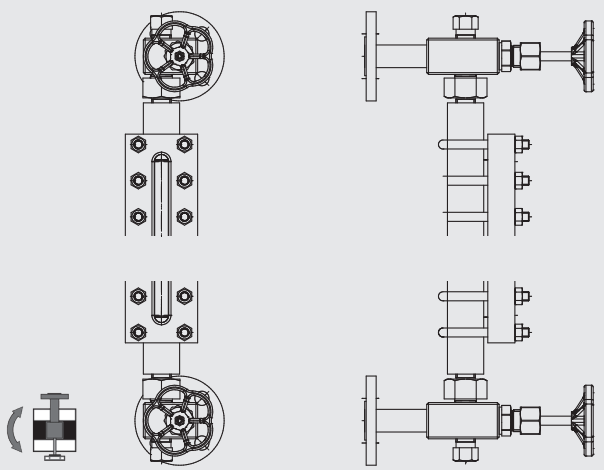

Fixed field of view

Straight valve
Left mount (lateral)

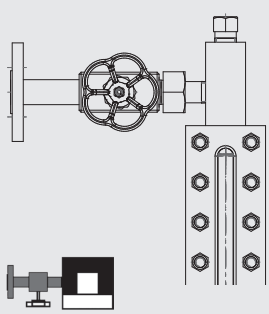

Straight valve
Back mount, left-hand

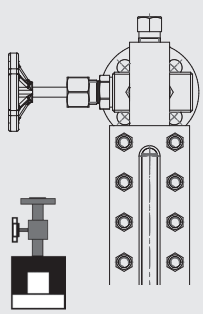

Straight valve
Back mount, right-hand

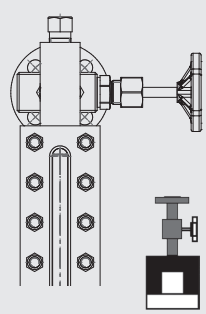

Straight valve
Right mount (lateral)

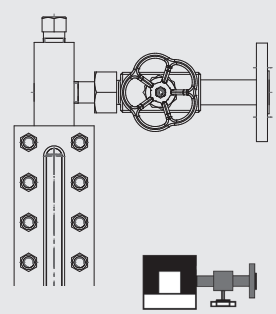

Angled valve
Left mount (lateral)

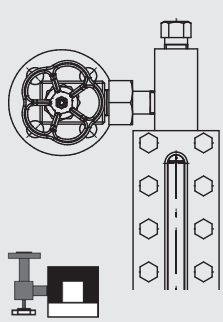

Angled valve
Back mount, left-hand

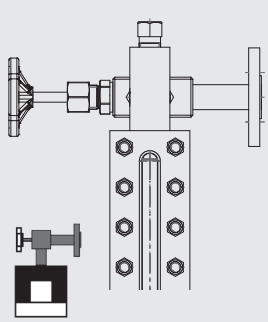

Angled valve
Back mount, right-hand

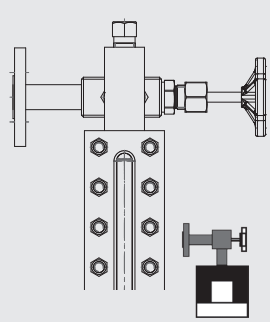

Angled valve
Right mount (lateral)

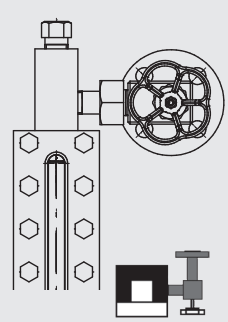

Glass level gauge, reflex, “Carbon-Line” version
Model LGG-RP

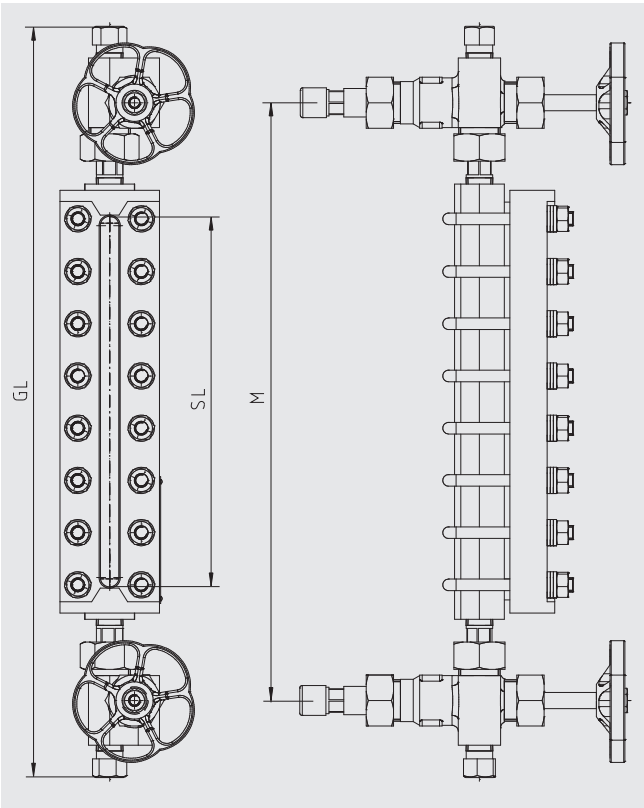

Valve arrangement

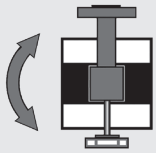

Specifications	
Material	Steel A350 LF2, nitrocarburised
Gauge body	40 x 40 mm [1.6 x 1.6 in]
Cover	80 x 30 mm [3.1 x 1.2 in]
Sight glass	Borosilicate, reflex per DIN 7081
Max. operating pressure	100 bar [1,450.4 psi] [1)]
Temperature range	-40 ... +243 °C [-40 … +469.4 °F] (steam) -40 ... +300 °C [-40 … +572 °F]
Process connections	■ Male thread ½ NPT, 3/4 NPT ■ Weld stub ½", ¾" ■ Flange DIN EN 1092-1: DN 15 ... 50, PN 16 ... 100 ■ Flange ASME 16.5: 1/2 ... 2", Class 150 ... 600
Centre-to-centre distance M	Freely selectable, min. visible length SL + 180 mm [7 in]
Vent	Plug ½ NPT (option: Valve)
Drain	Plug ½ NPT (option: Valve)
Glass size	4 ... 9
Number of segments	1 ... 5
Suitable valve heads	
Handwheel	Model LGV-33 (PN 250)

1) Depending on the temperature, the material properties must be observed

Glass level gauge, reflex, compact version with side pieces
Model LGG-E

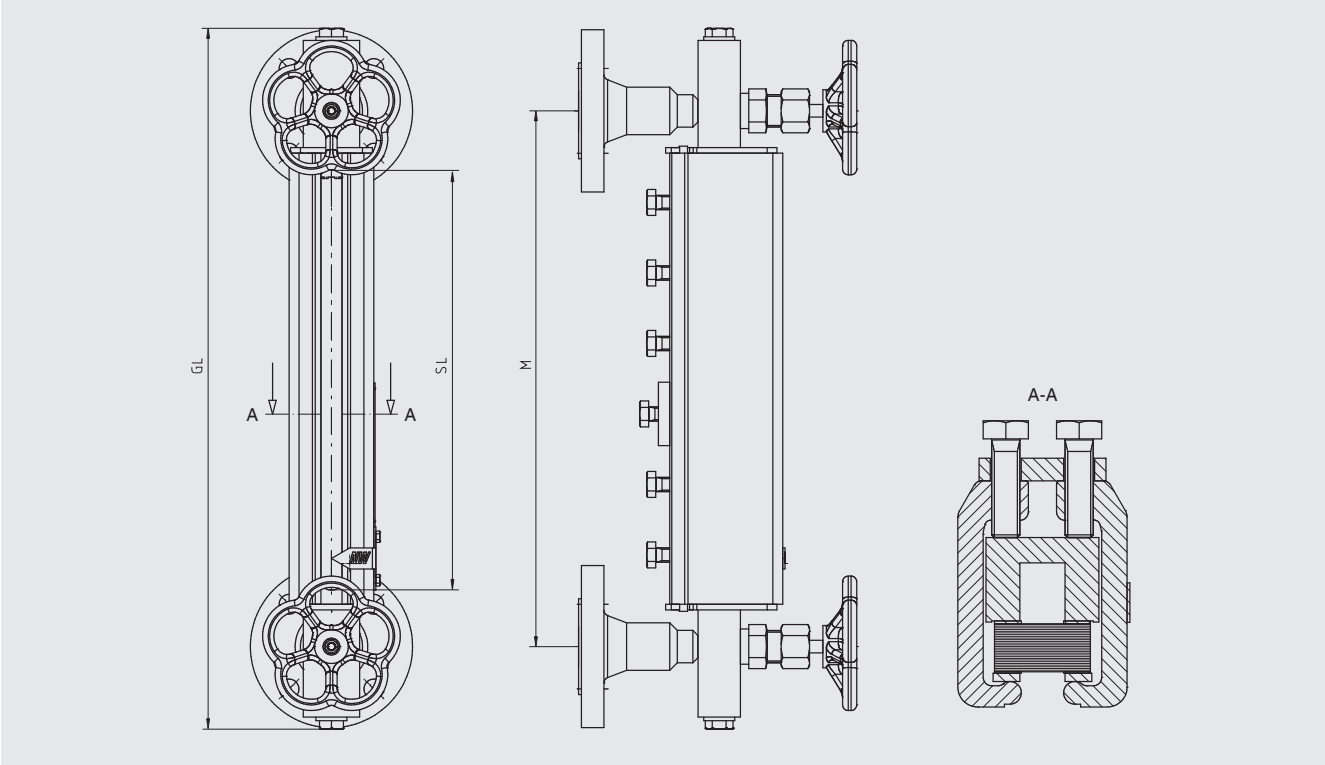

Specifications	
Material	Steel 1.0460, 1.0570
Gauge body	40 x 30 mm [1.6 x 1.2 in]
Cover	Clamping through side components, hinged
Sight glass	Borosilicate, reflex per DIN 7081
Max. operating pressure	40 bar [580.2 psi] [1)]
Temperature range	-10 ... +243 °C [+14 … 469.4 °F] (steam)
Process connections	■ Flange DIN EN 1092-1: DN 15 ... 50, PN 16 ... 40 ■ Flange ASME 16.5: ½ ... 2", Class 150 ... 300
Centre-to-centre distance M	Freely selectable, min. visible length SL + 80 mm [3.1 in]
Vent	Plug G ⅜ (option: Valve, ball valve)
Drain	Plug G ⅜ (option: Valve, ball valve)
Glass size	2 ... 11
Number of segments	1 ... 3
Suitable valve heads	Integrated, with ball-check valve, mounting components from stainless steel

1) Depending on the temperature, the material properties must be observed

Valve arrangement

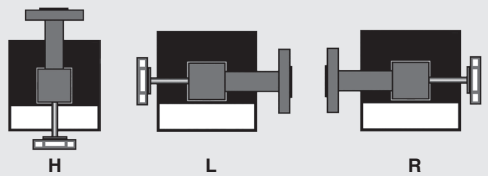

Glass level gauge, reflex, standard version
Model LGG-RE

Version with valve head, lateral, model LGV-52

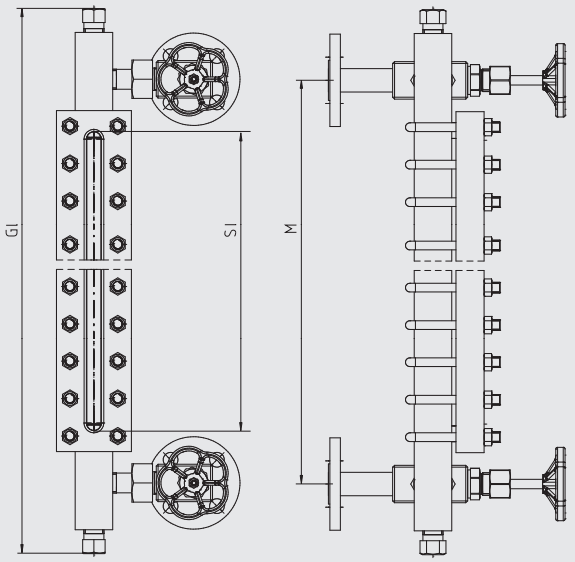

Version with valve head, top/bottom, model LGV-53

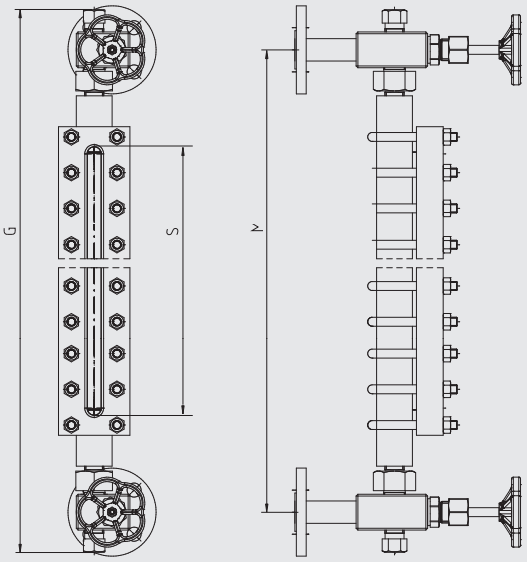

Specifications	Steel version	Stainless steel version
Material	Steel 1.0570, A350 LF2	Stainless steel 1.4404 (316L)
	Other materials on request	
Gauge body	40 x 40 mm [1.6 x 1.6 in], machined	
Cover	■ 80 x 30 mm [3.1 x 1.2 in], (PN 40) ■ 80 x 40 mm [3.1 x 1.6 in], (PN 100, PN 160)	■ 80 x 30 mm [3.1 x 1.2 in], (PN 40) ■ 80 x 40 mm [3.1 x 1.6 in], (PN 100, PN 160)
Sight glass	Borosilicate, reflex per DIN 7081	
Max. operating pressure	40 bar [580.2 psi], 100 bar [1,450.4 psi], 160 bar [2,320.6 psi] 1)	
Temperature range	-10 ... +243 °C [+14 … 469.4 °F] (steam) -10 ... +300 °C [+14 … 572 °F]	-196 ... +243 °C [-320.8 … +469.4 °F] (steam) -196 ... +300 °C [-320.8 … +572 °F]
Process connections	■ Male thread ½ NPT, ¾ NPT ■ Weld stub ½", ¾" ■ Flange DIN EN 1092-1: DN 15 ... 50, PN 16 ... 160 ■ Flange ASME 16.5: ½ ... 2", Class 150 ... 900	
Centre-to-centre distance M	■ Freely selectable, min. visible length SL + 180 mm [7 in] (with mounted valve heads model LGV-53, LGV-58, LGV-73) ■ Freely selectable, min. visible length SL + 80 mm [3.1 in] (with mounted valve heads model LGV-51, -52, -56, -57, -71, -72) ■ Special version, visible length = M (with mounted valve heads model LGV-51, -52, -56, -57, -71, -72)	
Vent	Plug G ⅜ (option: Weld stub, flange, valve or ball valve)	
Drain	Plug G ⅜ (option: Weld stub, flange, valve or ball valve)	
Glass size	2 ... 11	
Number of segments	1 ... 5 (more on request)	
Suitable valve heads		
Handwheel	Model LGV-51, -52, -53, -71, -72, -73 (PN 250)	Model LGV-51, -52, -53, -71, -72, -73 (PN 250)
Quick closing lever	Model LGV-56, LGV-57, LGV-58 (PN 100)	Model LGV-56, LGV-57, LGV-58 (PN 100)

1) Depending on the temperature, the material properties must be observed

Valve arrangement

Model LGV-51, LGV-56, LGV-71

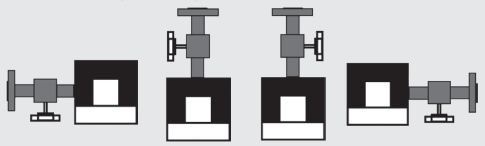

GLL GHL GHR GRR

Model LGV-52, LGV-57, LGV-72

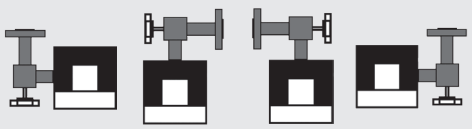

ELL EHL EHR ERR

Model LGV-53, LGV-58, LGV-73

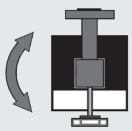

Glass level gauge, reflex, high-pressure version
Model LGG-RI

Version with valve head, lateral, model LGV-52

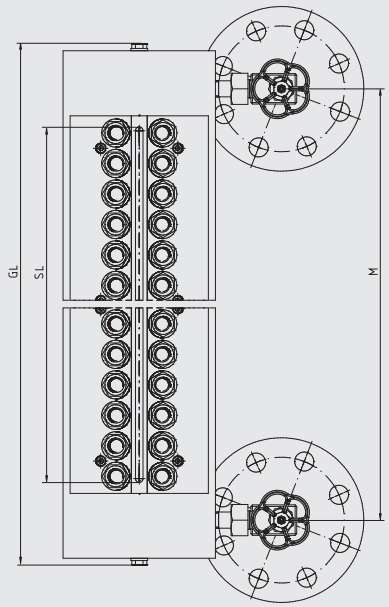

Version with valve head, top/bottom, model LGV-53

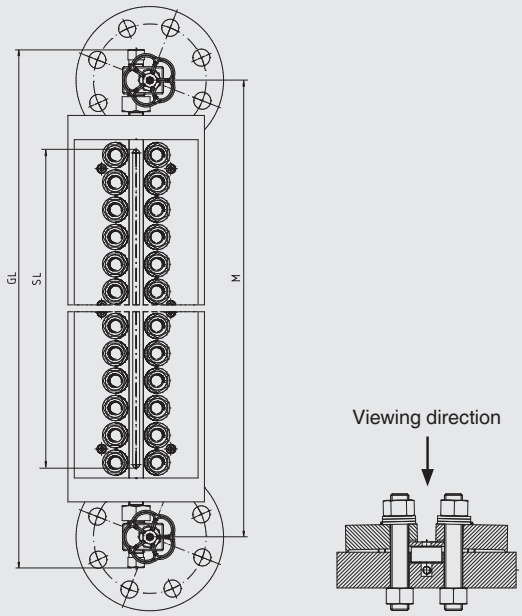

Specifications	Steel version	Stainless steel version
Material	Steel 1.5415 (15Mo3)	Stainless steel 1.4404 (316L)
	Other materials on request	
Gauge body	200 x 40 mm [5.5 x 1.6 in]	
Cover	Pressure frame	
Sight glass	Borosilicate, reflex per DIN 7081	
Max. operating pressure	250 bar [3625.9 psi] 1)	
Temperature range	-10 ... +100 °C [+14 … 212 °F]	-196 ... +100 °C [-320.8 … +212 °F]
Process connections	■ Male thread ½ NPT, ¾ NPT ■ Weld stub ½", ¾" ■ Flange DIN EN 1092-1: DN 15 ... 50, PN 16 ... 250 ■ Flange ASME 16.5: ½ ... 2", Class 150 ... 1,500	
Centre-to-centre distance M	■ Freely selectable, min. visible length SL + 180 mm [7 in] (with mounted valve head model LGV-53) ■ Freely selectable, visible length SL ≤ M (with mounted valve heads model LGV-51, LGV-52)	
Vent	Plug G ⅜ (option: Weld stub, flange, valve or ball valve)	
Drain	Plug G ⅜ (option: Weld stub, flange, valve or ball valve)	
Glass size	2 ... 9	
Number of segments	1 ... 5	
Suitable valve heads		
Handwheel	Model LGV-51, LGV-52, LGV-53	

1) Depending on the temperature, the material properties must be observed

Valve arrangement

Model LGV-51

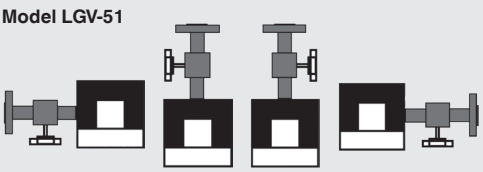

Model LGV-52

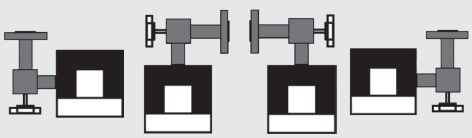

Model LGV-53

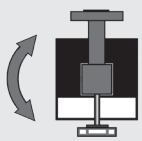

Glass level gauge, reflex, weld-in version
Model LGG-WR

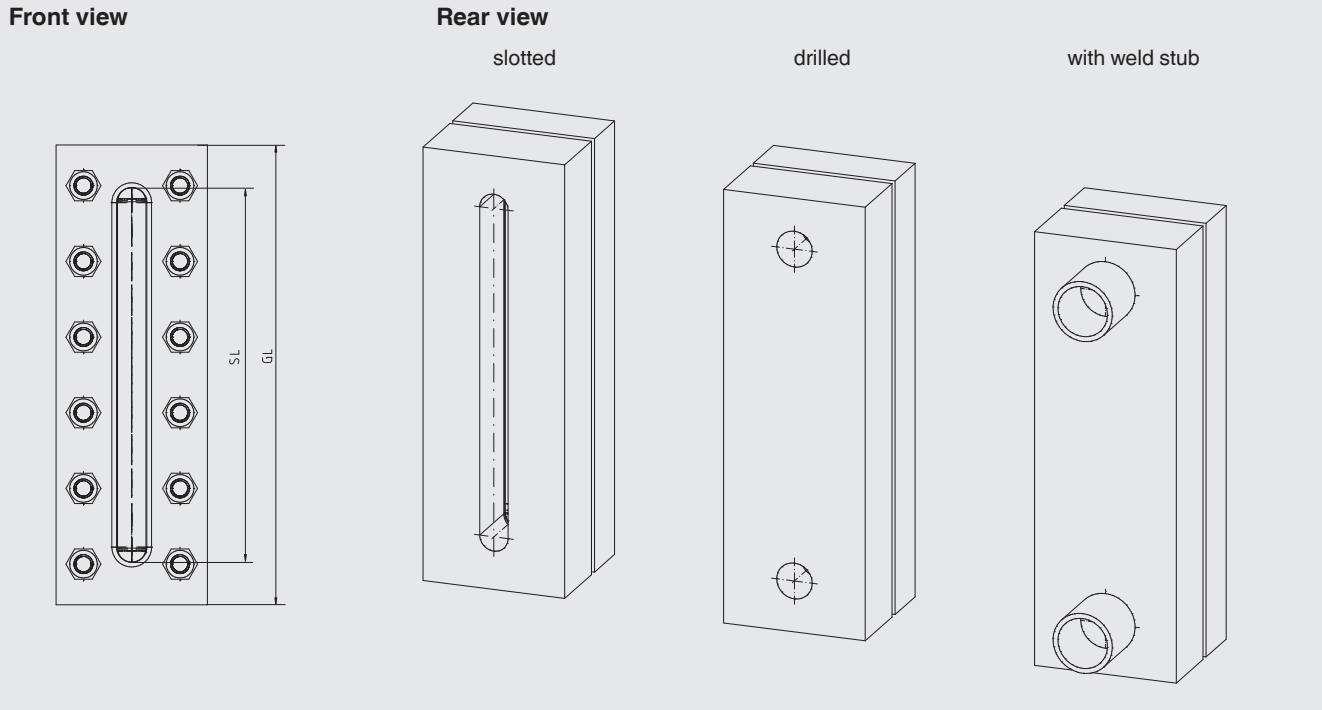

Specifications	Steel version	Stainless steel version
Material	Steel 1.0570	Stainless steel 1.4404 (316L)
	Other materials on request	
Gauge body	80 x 40 mm [3.1 x 1.6 in]	
Cover	80 x 30 mm [3.1 x 1.2 in]	80 x 30 mm [3.1 x 1.2 in]
Sight glass	Borosilicate, reflex per DIN 7081	
Max. operating pressure	40 bar [580.2 psi] 1) (indicator must be included in the pressure test for the vessel)	
Temperature range	-10 ... +243 °C [+14 … 469.4 °F] (steam) -10 ... +300 °C [+14 … 572 °F]	-196 ... +243 °C [-320.8 … +469.4 °F] (steam) -196 ... +300 °C [-320.8 … +572 °F]
Overall length GL	Visible length SL + 43 mm [1.7 in]	
Glass size	2 ... 9 (larger on request)	
Number of segments	1	

1) Depending on the temperature, the material properties must be observed

Glass level gauge, transparent, “Carbon-Line” version
Model LGG-TP

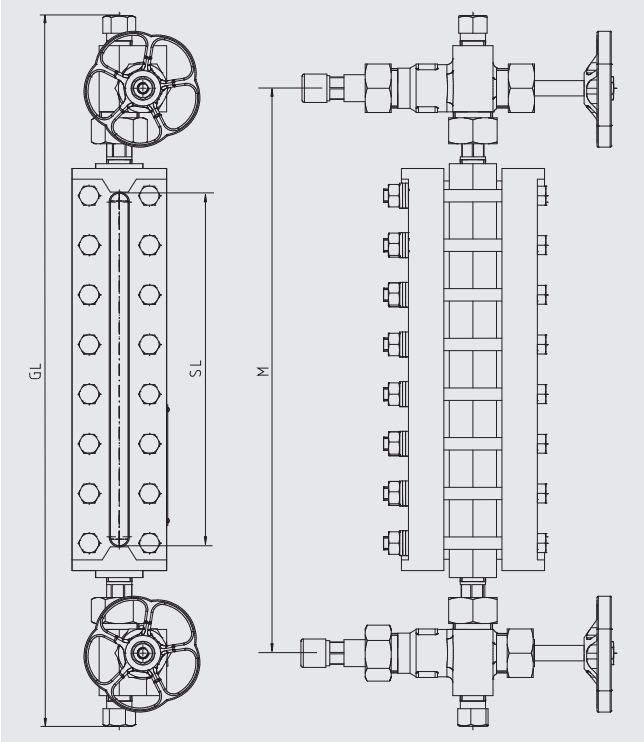

Specifications	
Material	Steel A350 LF2, nitrocarburised
	Other materials on request
Gauge body	40 x 40 mm [1.6 x 1.6 in]
Cover	80 x 34 mm [3.1 x 1.2 in]
Sight glass	Borosilicate, transparent per DIN 7081 (option: Mica design)
Max. operating pressure	100 bar [1,450.4 psi] 1)
Temperature range	-40 ... +243 °C [-40 … +469.4 °F] (steam, without mica design) -40 ... +300 °C [-40 … +572 °F] (steam, with mica design) -40 ... +300 °C [-40 … +572 °F]
Process connections	■ Male thread ½ NPT, ¾ NPT ■ Weld stub ½", ¾" ■ Flange DIN EN 1092-1: DN 15 ... 50, PN 16 ... 100 ■ Flange ASME 16.5: ½ ... 2", Class 150 ... 600
Centre-to-centre distance M	Freely selectable, min. visible length SL + 180 mm [7 in]
Vent	Plug ½ NPT (option: Valve)
Drain	Plug ½ NPT (option: Valve)
Glass size	4 ... 9
Number of segments	1 ... 5
Suitable valve heads	
Handwheel	Model LGV-33 (PN 250)

1) Depending on the temperature, the material properties must be observed

Valve arrangement

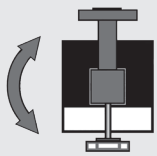

Glass level gauge, transparent, standard version
Model LGG-TE

Version with valve head, lateral, model LGV-52

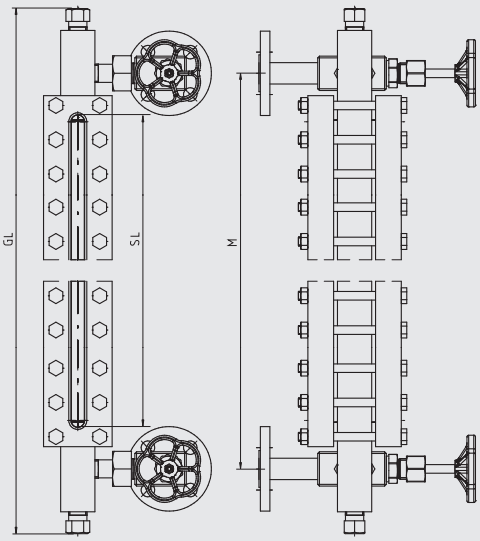

Version with valve head, top/bottom, model LGV-53

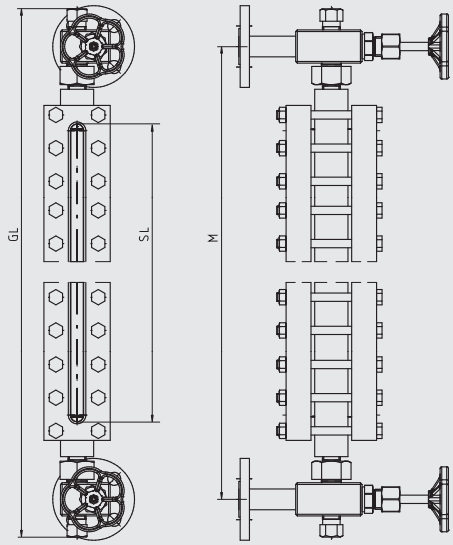

Specifications	Steel version	Stainless steel version
Material	Steel 1.0570, A350 LF2	Stainless steel 1.4404 (316L)
Gauge body	40 x 40 mm [1.6 x 1.6 in], machined	
Cover	■ 80 x 30 mm [3.1 x 1.2 in], (PN 40) ■ 80 x 40 mm [3.1 x 1.6 in], (PN 100, PN 160)	■ 80 x 30 mm [3.1 x 1.2 in], (PN 40) ■ 80 x 40 mm [3.1 x 1.6 in], (PN 100, PN 160)
Sight glass	Borosilicate, transparent per DIN 7081 (option: Mica design)	
Max. operating pressure	40 bar [580.2 psi], 100 bar [1,450.4 psi], 160 bar [2,320.6 psi] 1)	
Temperature range	-10 ... +243 °C [-14 … +469.4 °F] 2) -10 ... +300 °C [-14 … +572 °F] 3) -10 ... +300 °C [-14 … +572 °F]	-196 ... +243 °C [-320.8 … +469.4 °F] 2) -196 ... +300 °C [-320.8 … +572 °F] 3) -196 ... +300 °C [-320.8 … +572 °F]
Process connections	■ Male thread ½ NPT, ¾ NPT ■ Weld stub ½", ¾" ■ Flange DIN EN 1092-1: DN 15 ... 50, PN 16 ... 160 ■ Flange ASME 16.5: ½ ... 2", Class 150 ... 900	
Centre-to-centre distance M	■ Freely selectable, min. visible length SL + 180 mm [7 in] (with mounted valve heads model LGV-53, LGV-58, LGV-73) ■ Freely selectable, min. visible length SL + 80 mm [3.1 in] (with mounted valve heads model LGV-51, -52, -56, -57, -71, -72) ■ Special version, visible length = M (with mounted valve heads model LGV-51, -52, -56, -57, -71, -72)	
Vent	Plug G ⅜ (option: Weld stub, flange, valve or ball valve)	
Drain	Plug G ⅜ (option: Weld stub, flange, valve or ball valve)	
Glass size	2 ... 11	
Number of segments	1 ... 5 (others on request)	
Suitable valve heads		
Handwheel	Model LGV-51, -52, -53, -71, -72, -73 (PN 250)	Model LGV-51, -52, -53, -71, -72, -73 (PN 250)
Quick closing lever	Model LGV-56, LGV-57, LGV-58 (PN 100)	Model LGV-56, LGV-57, LGV-58 (PN 100)

1) Depending on the temperature, the material properties must be observed
2) Steam, without mica design
3) Steam, with mica design

Valve arrangement

Model LGV-51, LGV-56, LGV-71

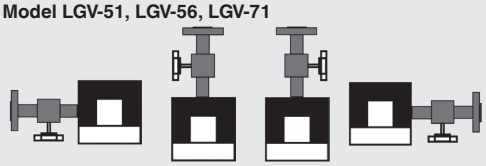

Model LGV-52, LGV-57, LGV-72

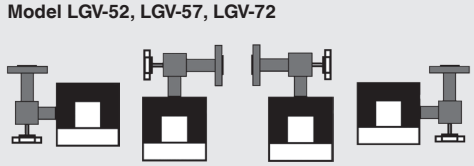

Model LGV-53, LGV-58, LGV-73

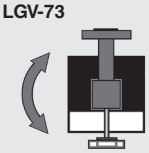

Glass level gauge, transparent, high-pressure version
Model LGG-TI

Version with valve head, lateral, model LGV-52

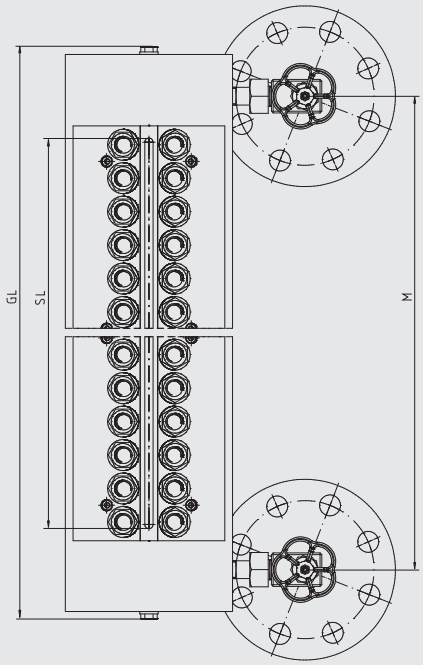

Version with valve head, top/bottom, model LGV-53

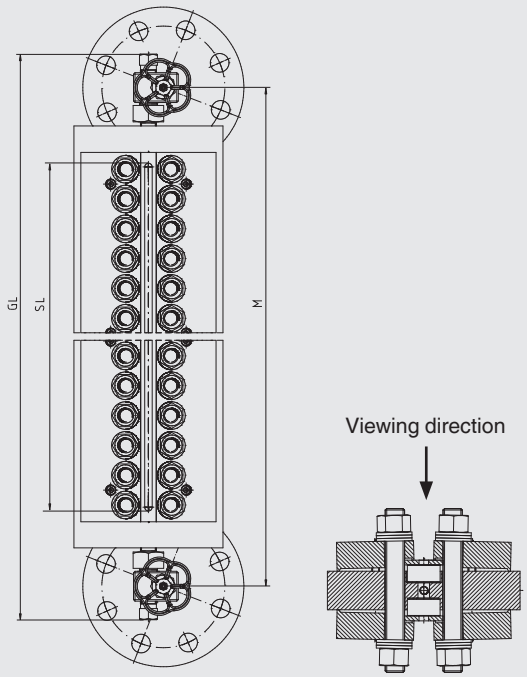

Specifications	Steel version	Stainless steel version
Material	Steel 1.5415 (15Mo3)	Stainless steel 1.4404 (316L)
	Other materials on request	
Gauge body	200 x 40 mm [5.5 x 1.6 in]	
Cover	Pressure frame	
Sight glass	Borosilicate, transparent per DIN 7081	
Max. operating pressure	250 bar [3625.9 psi] 1)	
Temperature range	-10 ... +100 °C [+14 … 212 °F]	-196 ... +100 °C [-320.8 … +212 °F]
Process connections	■ Male thread ½ NPT, ¾ NPT ■ Weld stub ½", ¾" ■ Flange DIN EN 1092-1: DN 15 ... 50, PN 16 ... 250 ■ Flange ASME 16.5: ½ ... 2", Class 150 ... 1,500	
Centre-to-centre distance M	■ Freely selectable, min. visible length SL + 180 mm [7 in] (with mounted valve head model LGV-53) ■ Freely selectable, visible length SL ≤ M (with mounted valve heads model LGV-51, LGV-52)	
Vent	Plug G ⅜ (option: Weld stub, flange, valve or ball valve)	
Drain	Plug G ⅜ (option: Weld stub, flange, valve or ball valve)	
Glass size	2 ... 9	
Number of segments	1 ... 5	
Suitable valve heads		
Handwheel	Model LGV-51, LGV-52, LGV-53	

1) Depending on the temperature, the material properties must be observed

Valve arrangement

Model LGV-51

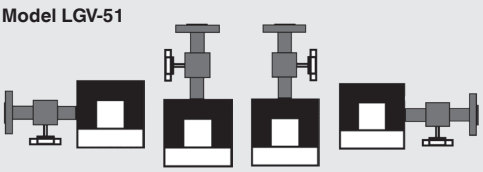

Model LGV-52

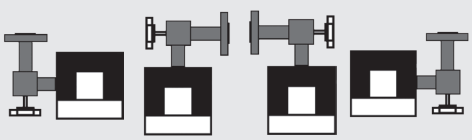

Model LGV-53

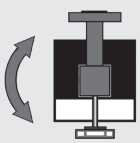

Glass level gauge, transparent, weld-in version
Model LGG-WT

Front view

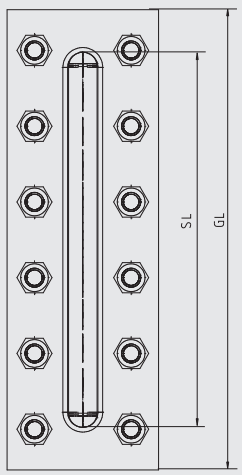

Rear view

slotted

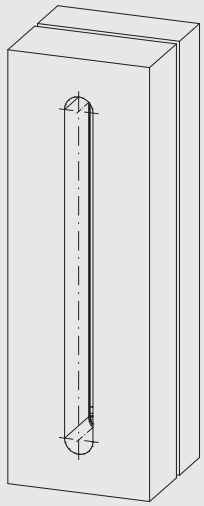

drilled

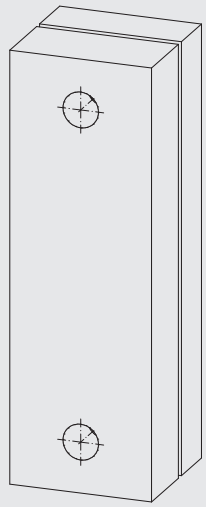

with weld stub

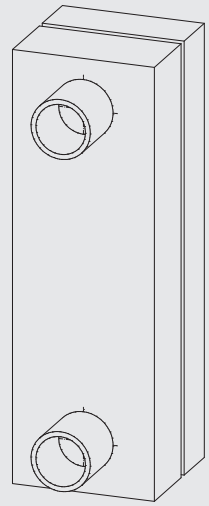

Specifications	Steel version	Stainless steel version
Material	Steel 1.0570, A350 LF2	Stainless steel 1.4404 (316L)
	Other materials on request	
Gauge body	80 x 40 mm [3.1 x 1.6 in]	
Cover	80 x 30 mm [3.1 x 1.2 in]	80 x 30 mm [3.1 x 1.2 in]
Sight glass	Borosilicate, transparent per DIN 7081 (option: Mica design)	
Max. operating pressure	40 bar [580.2 psi] 1) (indicator must be included in the pressure test for the vessel)	
Temperature range	-10 ... +243 °C [-14 … +469.4 °F] 2) -10 ... +300 °C [-14 … +572 °F] 3) -10 ... +300 °C [-14 … +572 °F]	-196 ... +243 °C [-320.8 … +469.4 °F] 2) -196 ... +300 °C [-320.8 … +572 °F] 3) -196 ... +300 °C [-320.8 … +572 °F]
Overall length GL	Visible length SL + 43 mm [1.7 in]	
Glass size	2 ... 9 (larger on request)	
Number of segments	1	

1) Depending on the temperature, the material properties must be observed
2) Steam, without mica design
3) Steam, with mica design

Glass level gauge, glass tube, standard version
Model LGG-GA

Version without valve (only stainless steel)

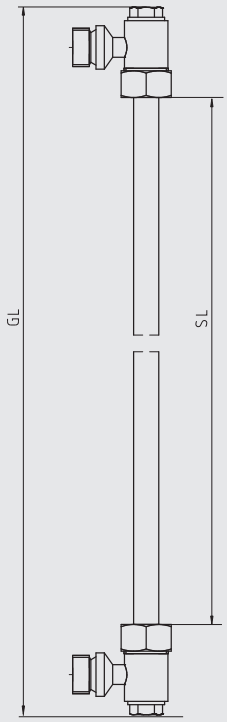

Version with valve (brass or stainless steel)

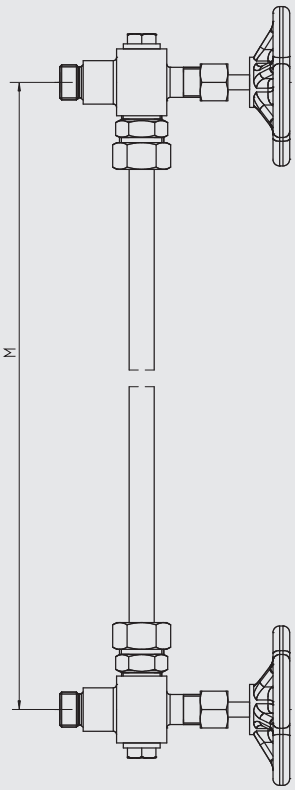

Specifications	Version without valve	Version with valve
Material	Stainless steel 1.4571	Stainless steel 1.4571 or brass 2.0401
	Other materials on request	
Sight glass	Glass tube, borosilicate, diameter 13 mm [0.5 in]	
Max. operating pressure	10 bar [145 psi] 1)	
Temperature range	-10 ... +80 °C [+14 … 176 °F] (with plexi protective cover) -10 ... +150 °C [+14 … 302 °F]	-10 ... +200 °C [+14 … 392 °F]
Process connections	■ Male thread G ½ ■ Flange DIN EN 1092-1 DN 15 ... DN 50, PN 16 ... 40 ■ Flange ASME 16.5: ½ ... 2", Class 150 ... 300	
Centre-to-centre distance M	110 ... 1,200 mm [4.3 … 47.2 in] Visible length SL + 70 mm [2.8 in]	150 ... 1,200 mm [5.9 … 47.2 in] Visible length SL + 110 mm [4.3 in]
Vent	Plug G ⅜	Plug G 3/8
Drain	Plug G ⅜	1.4571: Plug G ⅜ , 2.0401: Plug G 1/4
Glass size	Centre-to-centre distance M - 20 mm [0.78 in]	Centre-to-centre distance M - 65 mm [2.6 in]
Number of segments	1	
Suitable valve heads		
Glass tube fitting	Model LGV-04	Model LGV-05

1) Depending on the temperature, the material properties must be observed

Glass level gauge, glass tube, for large lengths with interposing glass-holder
Model LGG-GB

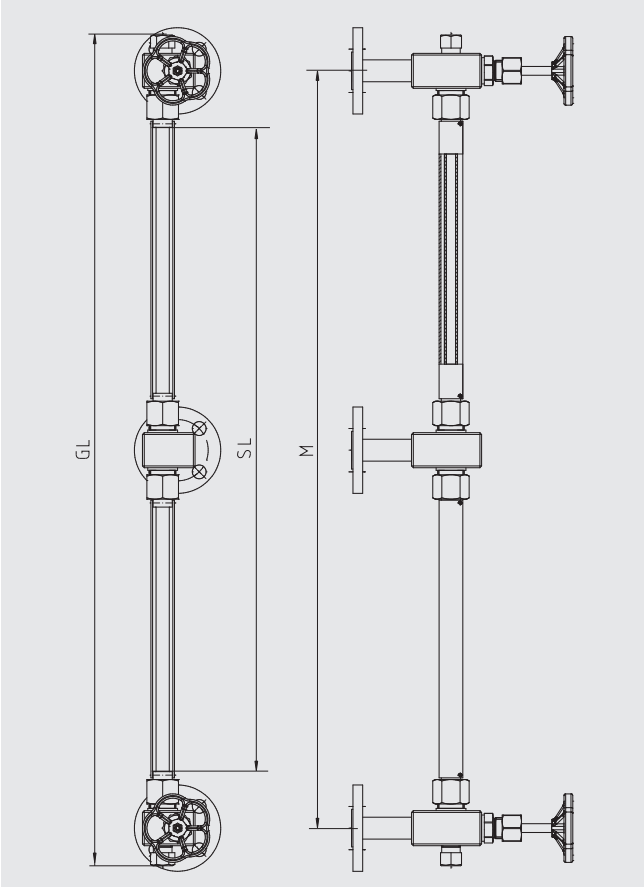

Specifications	
Material	Stainless steel 1.4571(316Ti)
	Other materials on request
Sight glass	Glass tube, borosilicate, diameter 16 mm [0.6 in]
Max. operating pressure	25 bar [362.6 psi] 1)
Temperature range	-10 ... +200 °C [+14 … 392 °F]
Process connections	■ Male thread G ½, ½ NPT ■ Flange DIN EN 1092-1 DN 15 ... DN 50, PN 16 ... 40 ■ Flange ASME 16.5: ½ ... 2", Class 150 ... 300
Centre-to-centre distance M	150 ... 4,500 mm [5.9 … 177.2 in], visible length SL + 130 mm [5.1 in]
Vent	Plug
Drain	Plug
Glass size	150 ... 4,500 mm [5.9 … 177.2 in] (use interposing gauge body from 1,500 mm [59.1 in])
Number of segments	1 ... 3
Suitable valve heads	
Handwheel	Model LGV-01
Quick closing lever	Model LGV-03

1) Depending on the temperature, the material properties must be observed

Glass level gauge, refraction, highest-pressure version
Model LGG-M

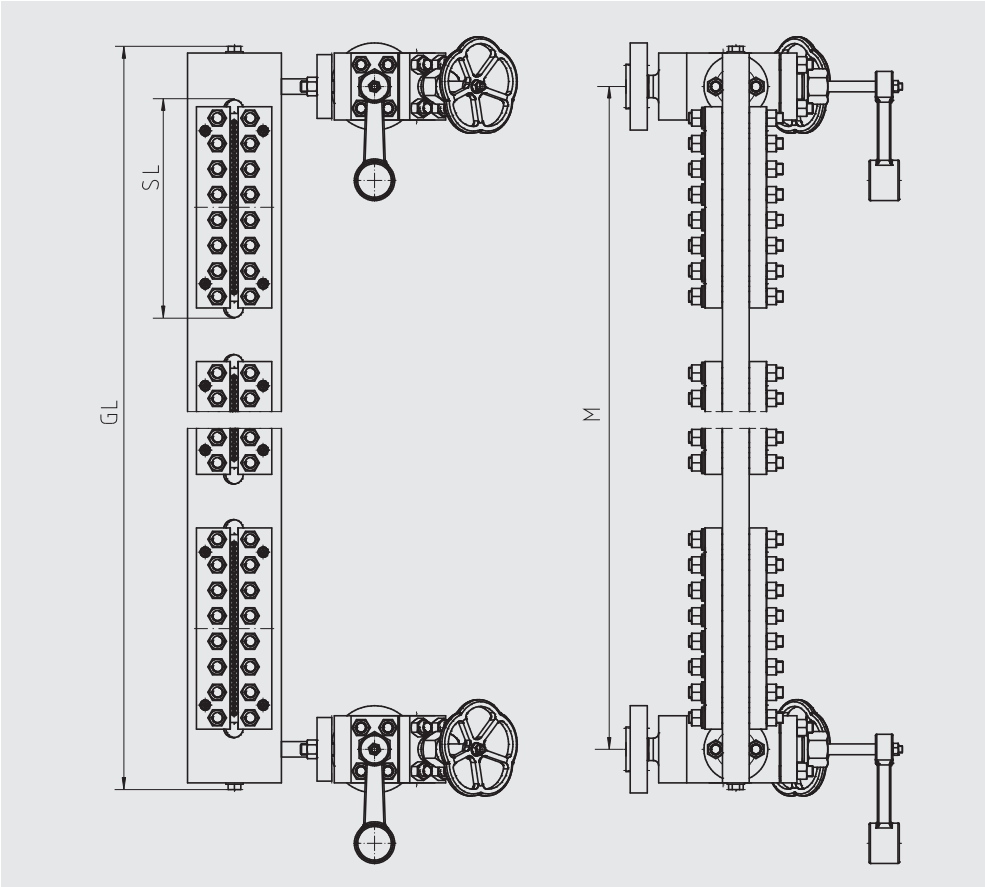

Valve arrangement

Model LGV-18, LGV-19

ELL **ERR**

Specifications	
Material	Steel 1.5415 (15Mo3)
	Other materials on request
Gauge body	200 x 40 mm [5.5 x 1.6 in]
Cover	Pressure frame
Sight glass	Mica package (sight glass separation 120 mm [4.7 in])
Max. operating pressure	250 bar [3625.9 psi] [1)]
Temperature range	-10 ... +374 °C [+14 … 705.2 °F]
Process connections	■ Flange DIN EN 1092-1: DN 15 ... 50, PN 16 ... 250 ■ Flange ASME 16.5: ½ ... 2", Class 150 ... 2,500
Centre-to-centre distance M	Freely selectable, min. visible length SL + 80 mm [3.1 in]
Vent	Plug G ½ (option: Weld stub, flange, valve or ball valve)
Drain	Plug G ½ (option: Weld stub, flange, valve or ball valve)
Glass size	2 ... 11
Number of segments	1 ... 9
Suitable valve heads	
Handwheel and quick closing lever	■ Model LGV-18 (PN 160) ■ Model LGV-19 (PN 250)

1) Depending on the temperature, the material properties must be observed

Valve heads

Model LGV-01
Glass tube fitting with handwheel

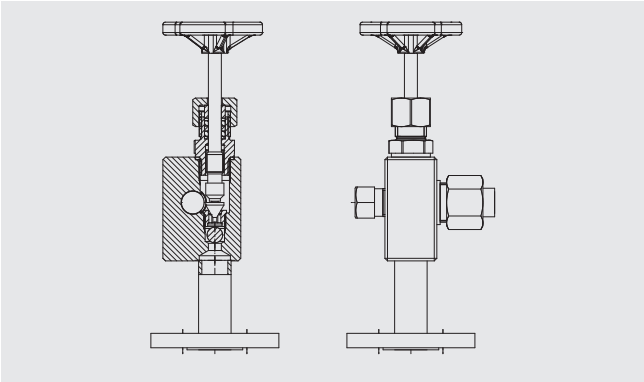

Specifications	
Materials	
Valve body	Stainless steel
Head piece	Stainless steel
Construction	Machined
Pressure range	PN 25
Operation	Handwheel
Mount	Top/bottom
Connection to gauge body	Glass tube 16
Rotatable	Yes
Thruway	Offset
Seat position	Inline
Valve stem thread	Internal
Drain	Yes
Ball-check valve	Yes

Model LGV-03
Glass tube fitting with quick closing lever

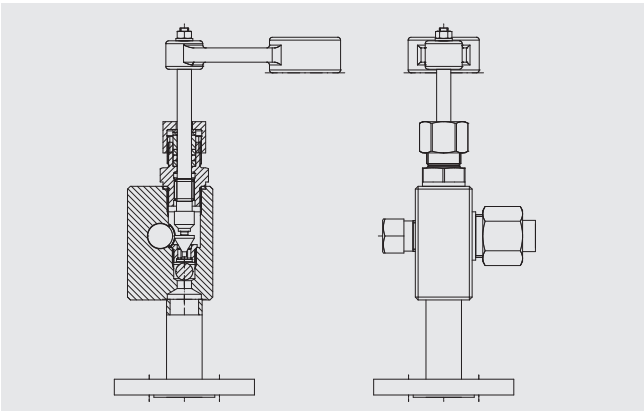

Specifications	
Materials	
Valve body	Stainless steel
Head piece	Stainless steel
Construction	Machined
Pressure range	PN 25
Operation	Quick closing lever
Mount	Top/bottom
Connection to gauge body	Glass tube 16
Rotatable	Yes
Thruway	Offset
Seat position	Inline
Valve stem thread	Internal
Drain	Yes
Ball-check valve	Yes

Model LGV-04
Compact glass tube fitting without valve

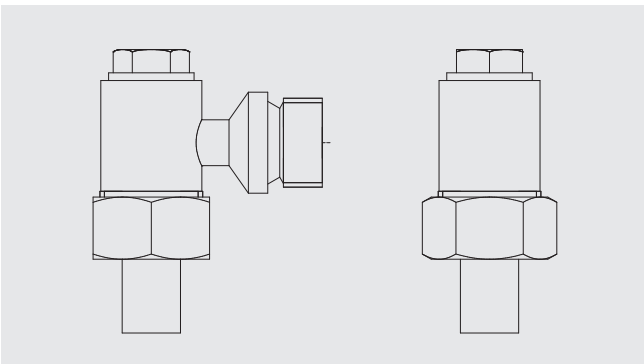

Specifications	
Valve body material	Stainless steel 1.4571
Construction	Weld-in
Pressure range	PN 25
Operation	Without
Mount	Top/bottom
Connection to gauge body	Glass tube 13.5
Rotatable	Yes
Thruway	Angled
Seat position	Without
Valve stem thread	Without
Drain	Yes, G ⅜
Ball-check valve	No

Model LGV-05
Compact glass tube fitting with handwheel

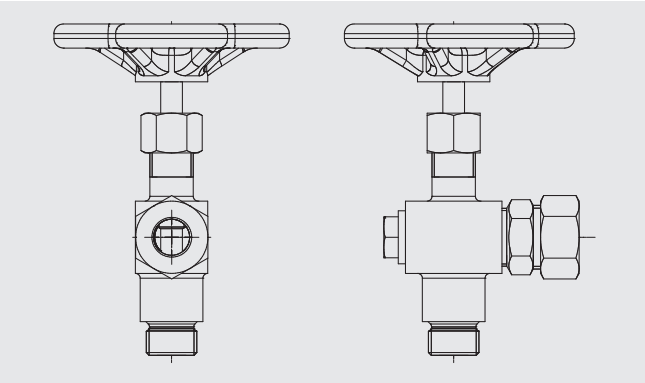

Specifications	
Materials	
Valve body	■ Brass 2.0401 ■ Stainless steel 1.4571
Head piece	Stainless steel
Construction	Machined
Pressure range	PN 10
Operation	Handwheel
Mount	Top/bottom
Connection to gauge body	Glass tube 13.5
Rotatable	Yes
Thruway	Angled
Seat position	Inline
Valve stem thread	Internal
Drain	Yes, 1.4571: G ⅜, 2.0401: G ¼
Ball-check valve	No

Model LGV-18
Double valve

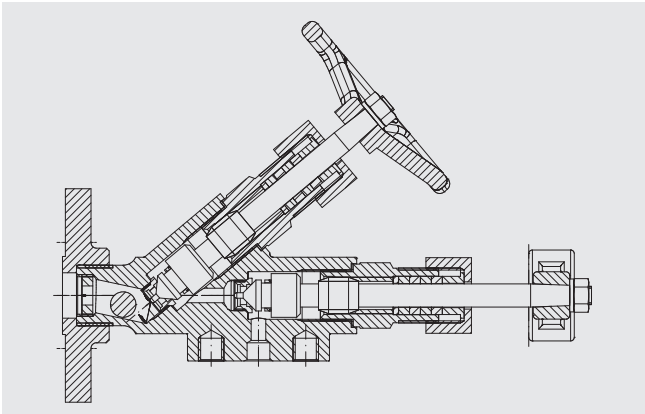

Specifications	
Materials	
Valve body	Steel 15Mo3
Head piece	Stainless steel
Construction	Forged
Pressure range	PN 160
Operation	Double handwheel/double lever
Mount	Lateral
Connection to gauge body	Flanged
Rotatable	No
Thruway	Angled
Seat position	Inline
Valve stem thread	Internal
Drain	No
Ball-check valve	Yes

Model LGV-19
Double valve, high pressure

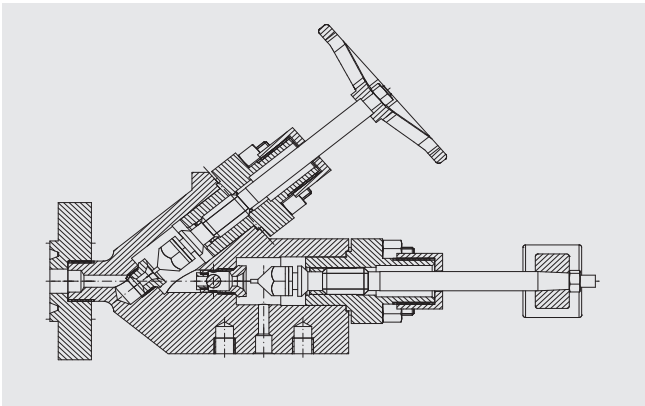

Specifications	
Materials	
Valve body	Steel 15Mo3
Head piece	Stainless steel
Construction	Machined
Pressure range	PN 250
Operation	Double handwheel/double lever
Mount	Lateral
Connection to gauge body	Flanged
Rotatable	No
Thruway	Angled
Seat position	Inline
Valve stem thread	Internal
Drain	No
Ball-check valve	Yes

Model LGV-33
Forged valve with handwheel

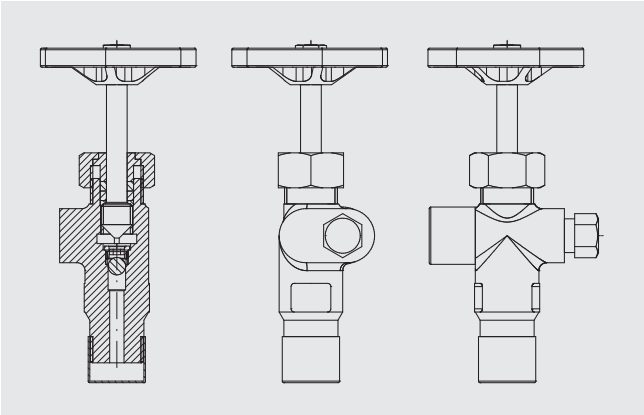

Specifications	
Materials	
Valve body	Steel A350 LF2
Head piece	Stainless steel
Construction	Forged
Pressure range	PN 250
Operation	Handwheel
Mount	Top/bottom
Connection to gauge body	Screwed nipple
Rotatable	Yes
Thruway	Offset
Seat position	Inline
Valve stem thread	Internal
Drain	Yes, ½ NPT
Ball-check valve	Yes

Model LGV-51, straight valve with handwheel

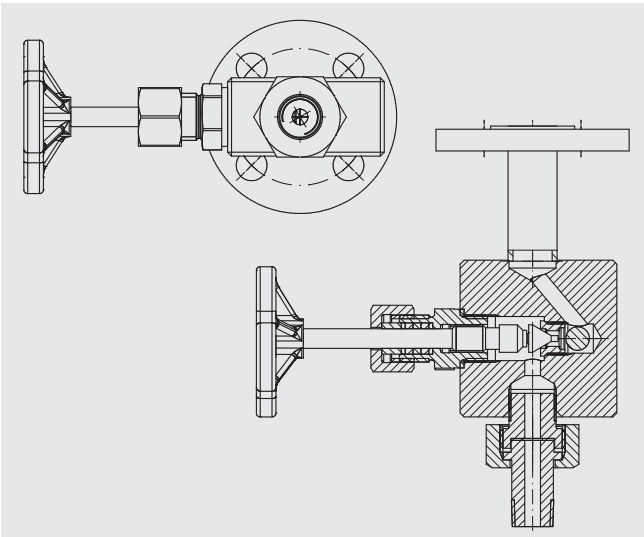

Specifications	
Materials	
Valve body	Steel, stainless steel
Head piece	Stainless steel
Construction	Machined
Pressure range	PN 250
Operation	Handwheel
Mount	Lateral/back
Connection to gauge body	Screwed nipple
Rotatable	No
Thruway	Straight
Seat position	Inline
Valve stem thread	Internal
Drain	No
Ball-check valve	Yes

Model LGV-52
Angled valve with handwheel

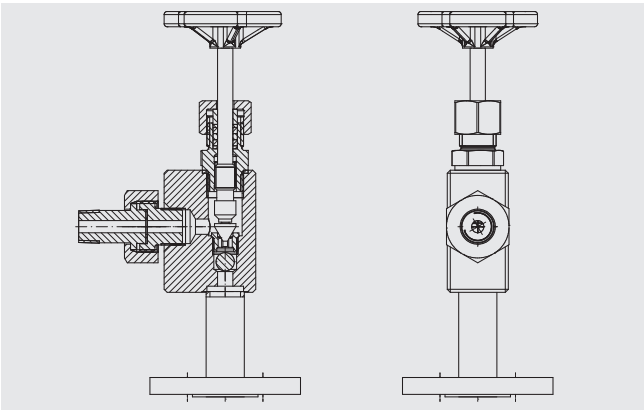

Specifications	
Materials	
Valve body	Steel, stainless steel
Head piece	Stainless steel
Construction	Machined
Pressure range	PN 250
Operation	Handwheel
Mount	Lateral
Connection to gauge body	Screwed nipple
Rotatable	No
Thruway	Angled
Seat position	Inline
Valve stem thread	Internal
Drain	No
Ball-check valve	Yes

Model LGV-53
Offset valve with handwheel

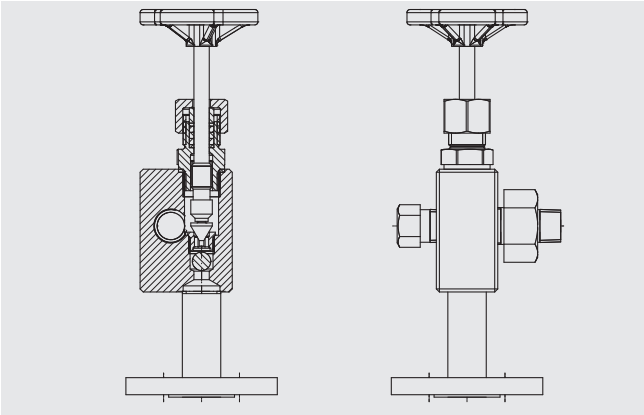

Specifications	
Materials	
Valve body	Steel, stainless steel
Head piece	Stainless steel
Construction	Machined
Pressure range	PN 250
Operation	Handwheel
Mount	Top/bottom
Connection to gauge body	Screwed nipple
Rotatable	Yes
Thruway	Offset
Seat position	Inline
Valve stem thread	Internal
Drain	Yes
Ball-check valve	Yes

Model LGV-56
straight valve with quick closing lever

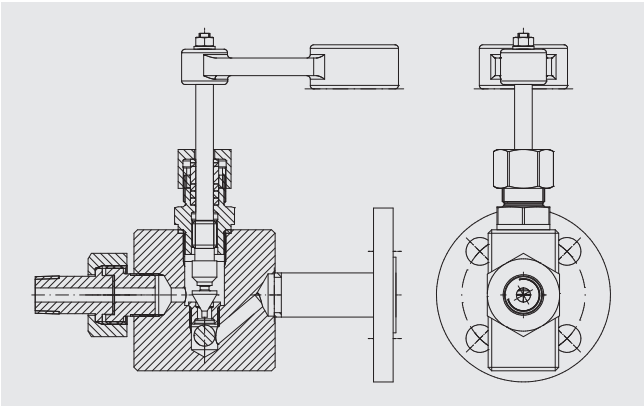

Specifications	
Materials	
Valve body	Steel, stainless steel
Head piece	Stainless steel
Construction	Machined
Pressure range	PN 100
Operation	Quick closing lever
Mount	Lateral/back
Connection to gauge body	Screwed nipple
Rotatable	No
Thruway	Straight
Seat position	Inline
Valve stem thread	Internal
Drain	No
Ball-check valve	Yes

Model LGV-57
Angled valve with quick closing lever

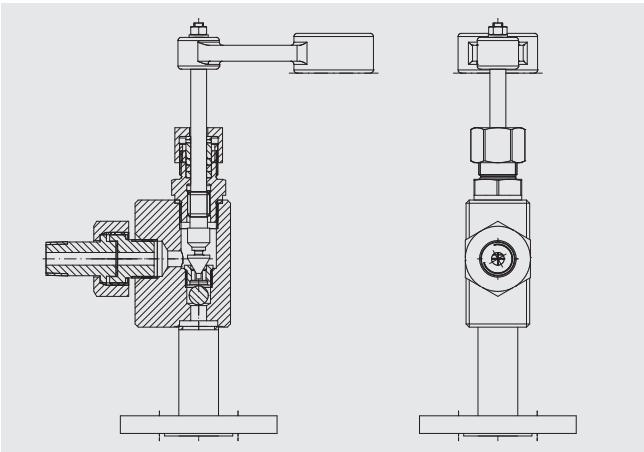

Specifications	
Materials	
Valve body	Steel, stainless steel
Head piece	Stainless steel
Construction	Machined
Pressure range	PN 100
Operation	Quick closing lever
Mount	Lateral
Connection to gauge body	Screwed nipple
Rotatable	No
Thruway	Angled
Seat position	Inline
Valve stem thread	Internal
Drain	No
Ball-check valve	Yes

Model LGV-58
Offset valve with quick closing lever

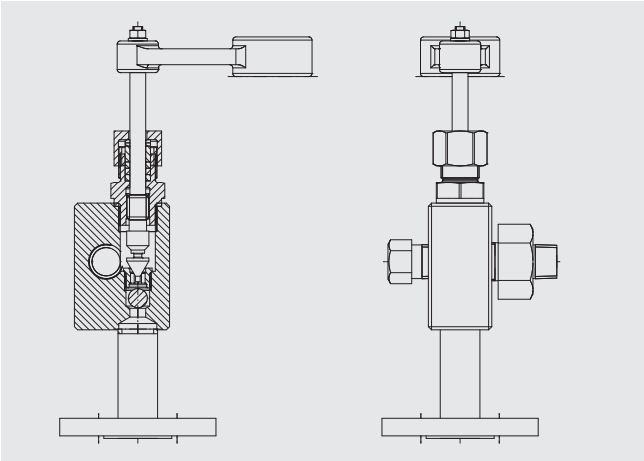

Specifications	
Materials	
Valve body	Steel, stainless steel
Head piece	Stainless steel
Construction	Machined
Pressure range	PN 100
Operation	Quick closing lever
Mount	Top/bottom
Connection to gauge body	Screwed nipple
Rotatable	Yes
Thruway	Offset
Seat position	Inline
Valve stem thread	Internal
Drain	Yes
Ball-check valve	Yes

Model LGV-71, straight valve with handwheel

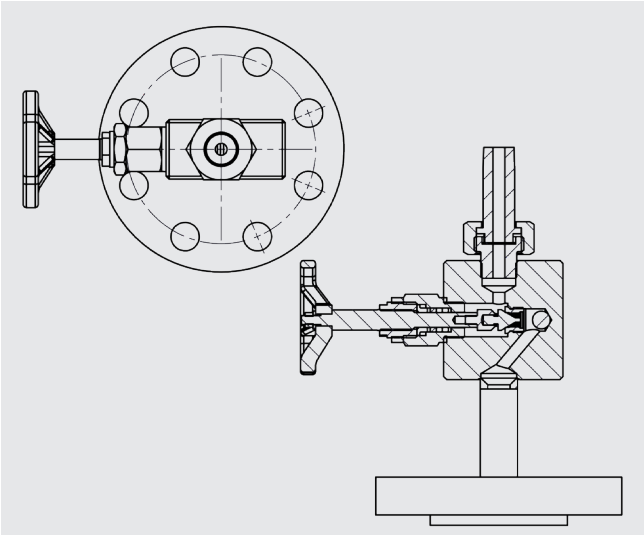

Specifications	
Materials	
Valve body	Steel, stainless steel
Head piece	Stainless steel
Construction	Machined
Pressure range	PN 250
Operation	Handwheel
Mount	Lateral/back
Connection to gauge body	Screwed nipple
Rotatable	No
Thruway	Straight
Seat position	Inline
Valve stem thread	External
Drain	No
Ball-check valve	Yes

Model LGV-72
Angled valve with handwheel

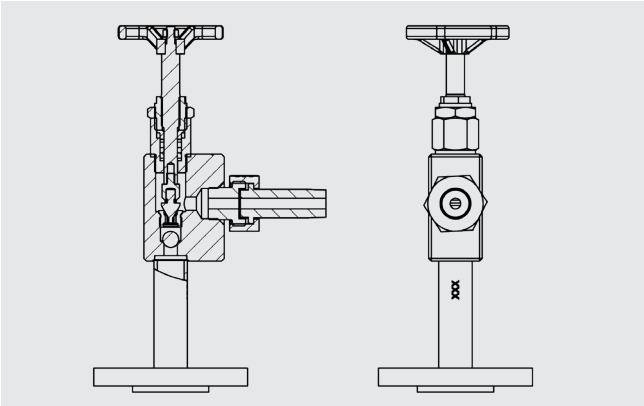

Specifications	
Materials	
Valve body	Steel, stainless steel
Head piece	Stainless steel
Construction	Machined
Pressure range	PN 250
Operation	Handwheel
Mount	Lateral
Connection to gauge body	Screwed nipple
Rotatable	No
Thruway	Angled
Seat position	Inline
Valve stem thread	External
Drain	No
Ball-check valve	Yes

Model LGV-73
Offset valve with handwheel

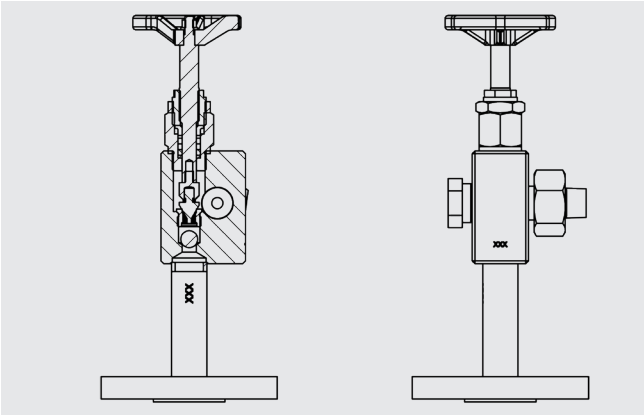

Specifications	
Materials	
Valve body	Steel, stainless steel
Head piece	Stainless steel
Construction	Machined
Pressure range	PN 250
Operation	Handwheel
Mount	Top/bottom
Connection to gauge body	Screwed nipple
Rotatable	Yes
Thruway	Offset
Seat position	Inline
Valve stem thread	External
Drain	Yes
Ball-check valve	Yes

Spare parts

Name	Description	Order number
Glass set Rx	**1 x sight glass reflex borosilicate size x** **1 x flat gasket size x** **1 x cushion size x**	
Glass set R2	Size 2 (140 x 34 x 17 mm [5.5 x 1.3 x 0.7 in])	119442
Glass set R3	Size 3 (165 x 34 x 17 mm [6.5 x 1.3 x 0.7 in])	119444
Glass set R4	Size 4 (190 x 34 x 17 mm [7.5 x 1.3 x 0.7 in])	119446
Glass set R5	Size 5 (220 x 34 x 17 mm [8.7 x 1.3 x 0.7 in])	119447
Glass set R6	Size 6 (250 x 34 x 17 mm [9.8 x 1.3 x 0.7 in])	119448
Glass set R7	Size 7 (280 x 34 x 17 mm [11.0 x 1.3 x 0.7 in])	119450
Glass set R8	Size 8 (320 x 34 x 17 mm [12.6 x 1.3 x 0.7 in])	119451
Glass set R9	Size 9 (340 x 34 x 17 mm [13.4 x 1.3 x 0.7 in])	119452
Glass set R10	Size 10 (370 x 34 x 17 mm [14.6 x 1.3 x 0.7 in])	119453
Glass set R11	Size 11 (400 x 34 x 17 mm [15.7 x 1.3 x 0.7 in])	119454
Glass set Tx	**1 x sight glass transparent borosilicate size x** **1 x flat gasket size x** **1 x cushion size x**	
Glass set T2	Size 2 (140 x 34 x 17 mm [5.5 x 1.3 x 0.7 in])	119477
Glass set T3	Size 3 (165 x 34 x 17 mm [6.5 x 1.3 x 0.7 in])	119476
Glass set T4	Size 4 (190 x 34 x 17 mm [7.5 x 1.3 x 0.7 in])	119475
Glass set T5	Size 5 (220 x 34 x 17 mm [8.7 x 1.3 x 0.7 in])	119473
Glass set T6	Size 6 (250 x 34 x 17 mm [9.8 x 1.3 x 0.7 in])	119472
Glass set T7	Size 7 (280 x 34 x 17 mm [11.0 x 1.3 x 0.7 in])	119467
Glass set T8	Size 8 (320 x 34 x 17 mm [12.6 x 1.3 x 0.7 in])	119465
Glass set T9	Size 9 (340 x 34 x 17 mm [13.4 x 1.3 x 0.7 in])	119462
Glass set T10	Size 10 (370 x 34 x 17 mm [14.6 x 1.3 x 0.7 in])	119456
Glass set T11	Size 11 (400 x 34 x 17 mm [15.7 x 1.3 x 0.7 in])	119455
Glass protection		
Glass protection M2	1 x mica shield size 2	501577
Glass protection M3	1 x mica shield size 3	501578
Glass protection M4	1 x mica shield size 4	501579
Glass protection M5	1 x mica shield size 5	501580
Glass protection M6	1 x mica shield size 6	501581
Glass protection M7	1 x mica shield size 7	501582
Glass protection M8	1 x mica shield size 8	501583
Glass protection M9	1 x mica shield size 9	501585
Glass protection M10	1 x mica shield size 10	501587
Glass protection M11	1 x mica shield size 11	501588
Head piece		
Head piece KS1	1 x head piece for LGG-E	503765
Head piece KS2	1 x head piece for valve model LGV-01, LGV-51, LGV-52, LGV-53	503923
Head piece KS3	1 x head piece for valve model LGV-03, LGV-56, LGV-57, LGV-58	503924
Head piece KS4	1 x head piece for valve model LGV-18 (handwheel, ball)	503619
Head piece KS5	1 x head piece for valve model LGV-18 (lever)	503620
Head piece KS6	1 x head piece for valve model LGV-19 (handwheel)	503621
Head piece KS7	1 x head piece for valve model LGV-19 (lever, ball)	503622
Head piece KS8	1x head piece for valve model LGV-71, LGV-72, LGV-73	14519914

Accessories

Model		Description
	LGI	Illumination unit, for glass level gauge → See data shee LM 33.02

Acrylic glass extender

Using the acrylic glass extender, the sight glass can be insulated from low temperatures. The window is thus maintained through the insulation.

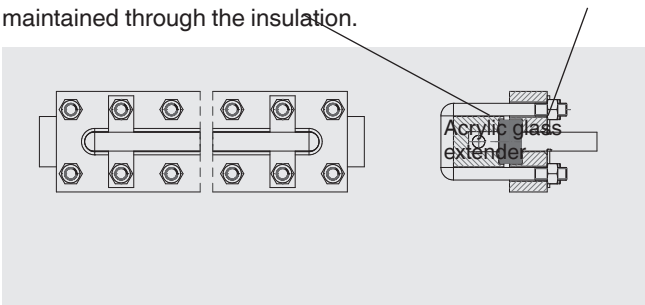

Mark for low-water level

This low-water mark serves as a warning indicator for the operator. Form, size and lettering vary depending on the design of the water-level indicator.
The position of the low-water mark is always specified from the centre of the lower process connection.

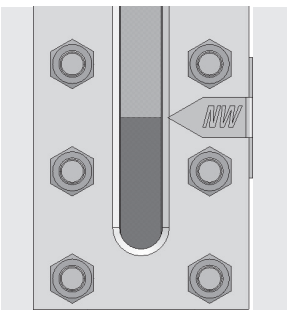

Ordering information

To order the described product the order number (if available) is sufficient.

Alternatively:
Model / Version / Process connection / Centre-to-centre distance / Valve type / Valve head arrangement / Process specifications (operating temperature and pressure) / Options

© 10/2010 WIKA Alexander Wiegand SE & Co. KG, all rights reserved.
The specifications given in this document represent the state of engineering at the time of publishing.
We reserve the right to make modifications to the specifications and materials.
In case of a different interpretation of the translated and the English data sheet, the English wording shall prevail.

WIKA Alexander Wiegand SE & Co. KG
Alexander-Wiegand-Straße 30
63911 Klingenberg/Germany
Tel. +49 9372 132-0
info@wika.de
www.wika.de