Relex, Transparent and Bicolour Glass Level Gauges

BONETTI®
Quality Valves & Level Gauges

General information

CESARE BONETTI Company has been manufacturing level gauges since their origin. This product has been our industrial speciality in Italy and all over the world since the twenties.
This catalogue describes our glass level gauges, whereas our magnetic level gauges are shown in a separate bulletin.
When you only state the operating conditions, namely:
- fluid
- working pressure
- working temperature

we are able to supply the most suitable level gauge from both the points of view functionality and price.
There are three basic types of glass level gauges:
- reflex
- transparent
- bicolour.

BONETTI reflex level gauges (Fig. 701)

Working principle:
The liquid level is distinguished by the different brightness of the reflex glass in the water or in the steam space. in fact, where there is liquid in contact with the glass, the incidental light is refracted to the inside of the gauge and absorbed; in the steam space, the incidental light is reflected against the glass grooves and the glass appears very bright (Fig. 701).

Applications:
Reflex level gauges can be used in most of application and offer great advantages in terms of:
- low initial cost
- low operating cost
- easy level reading

Reflex level gauges cannot be used in certain cases as for example:
- when the separation level between two liquids has to be read (interface);
- when besides the level indication, the observation of the liquid colour is required;
- when the process fluid is high-pressure water steam, since in this case the glass must be protected from the solvent action of the boiler water by using mica shields;
- when the process fluid is such that can corrode the glass (e.g. high temperature alkaline solutions or hydrofluoric acid), since mica shields or Polytrifluorochloroethylene shields must be used to protect the glass.

BONETTI transparent level gauges (Fig.702 and 703)

Working principle:
Apart from glass tube level gauges, transparent level gauges are always fitted with two plate transparent glasses between which the fluid is contained. The fluid level is indicated as the result of the different transparency of the two media (Fig. 702) and in some cases (for water steam), by conveying upwards on to the surface of separation (between liquid and gaseous substances) a source of light (Fig. 703) located at the back of the gauge, the rays of which are totally reflected down to the observer.

Applications:
Transparent level gauges are suitable for almost all installations.
In fact they permit:
- the use of mica shields or Polytrifluorochloroethylene shields to protect the glass from the corrosive action of the process fluid;
- the observation of interface;
- the observation of the liquid colour.

BONETTI bicolour level gauges (Fig. 704)

Working principle:
The two opposite glasses fitted into these bicolour level gauges are not parallel to each other. By means of a suitable illuminator into which a red and a green screens are fitted,
- the portion of visible length occupied by steam appears red whereas
- the portion of visible length occupied by water appears green.

The level reading is very easy even at a considerable distance.
The reading of the bicolour level gauges is not affected by the blind spaces between one port-hole and the successive one (Fig. 704). Details on page 224-25.

Applications:
Their main application is on high pressure steam boilers.

BONETTI bicolour level gauges with parallel glasses (Fig. 812)

Working principle:
It is a variation of transparent level gauges, however equipped with two reflex glasses and a back illuminator, fitted with suitable coloured filters. The sharp reading is given by the contrast between the bright colour (usually: red) of filters in the lower part containing liquid and the colour of upper part of visible window (Fig. 812).

Applications:
These level gauges are particularly suitable for liquids:
- colourless,
- very fluid,
- non-corrosive for glasses (e.g. ammoniacal solutions, trichloroethylene, water steam up to 32 bar, etc.).

Remote Reading Level Gauges, type ITT-RDR

Now these level gauges are not frequently requested because Magnetic Remote Reading Level Gauges are preferred (specific bulletin on request).
Nevertheless they are appreciated and we still produce them.
The system includes: drum connections, condensate pot, downward connection pipes, operating device, down gauge body.
Usually bodies type BT29 or BT33 are used.
Further details on request.

Request of Offer and Order

The above descriptions are given as general information on the possible uses of BONETTI level gauges.
However the characteristics of the plant by same performances should guide the planner towards a well defined type of level gauge, that is most suitable for the purpose.
Guide elements can be:
- pressure, temperature, colour, viscosity, density, corrosion power of the process fluid,
- environmental conditions as dangerous area, indoor or outdoor, corroding atmosphere, etc.

Therefore when enquiring about level gauges or when placing order the following information must be supplied:
- type of the process fluid
- maximum working pressure
- maximum working temperature
- centre to centre distance between the vessel connections (or visible length required)
- type of connections (flanged, threaded, etc.) and standard (UNI, ASME, BS, DIN, AFNOR, GOST, etc.) according to which they are required
- optionals requested: see
  - page 27 for shut-off valves
  - page 37 for gauges bodies.

Fig. 701 reflex	Fig. 702 transparent	Fig. 703 transparent	Fig. 704 bicolour	Fig. 812 bicolour
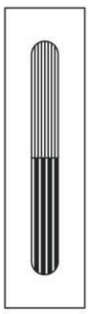	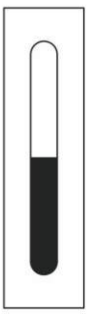	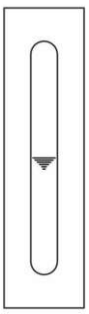	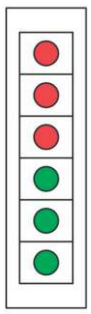	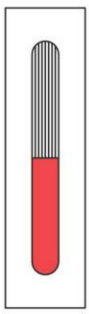

BONETTI®
Quality Valves & Level Gauges

Types, Material Schedules, Applications

In this Bulletin we give the description of our level gauges made of metallic materials and omit that ones of non-metallic materials (Ebonite, Polypropylene, PTFE, etc.): information on request.

Fig. 864	Type	Page	Material Schedule	Max operating conditions Press. Bar	Temp. °C	Rating (**) ASME Class	PN bar	Fluid
Reflex	BR14 - GP11	6	52	20	211		25	Water steam, other fluids
	BR 14 - G11	6						
	BR12 - GP11	7	52	32	236		40	Water steam
	BR12 - G11	7	52, 64	64 40	120 300(*)			Other fluids (Remark 14)
	BR22 - GP11	8	52	12	187		16	Water steam
	BR22 - GP12	8	52, 64	28 10	38 300(*)			Other fluids (Remark 14)
	BR23 - GP11	9	52	22	216			Water steam
	BR23 - GP12	9	52, 63, 64	105 80	38 300(*)	600	100	Other fluids (Remark 14)
	BR24 - GP11	10	52	32	236			Water steam
	BR24 - GP12	10	52, 63, 64	165 105	38 300(*)	900	100	Other fluids (Remark 14)
	BR28 - G41	11	51, 52, 63, 64	200 160	38 300(*)	1500	250	Any fluids, water steam excepted (Remark 14)
	BR28 - GP12	11	52, 63, 64	165 105	38 300(*)			Any fluids, water steam excepted (Remark 14)
	BR25 - GP12	12	52, 63, 64	105 62	38 300(*)	900	100	Any fluids, water steam excepted (Remark 14)
	BR13 - G51	13	52	400	120	(2500)	(400)	Any fluids (Remark 9)
	BR26 & BR27	14	52, 55, 61, 62, 63, 64			(600)		Any fluids, water steam excepted (Remark 10)
Transparent	BTV - GP11	15	52, 63, 64	6 12	158 38			Water steam (Remark 11)
	BT23 - GP11	16	52	12	187			Water steam (Remark 12)
	BT23 - GP12	16	52, 63, 64	51 30	38 300(*)	300		Other fluids (Remark 14)
	BT24 - GP11	17	52	20	211			Water steam (Remark 12)
	BT24 - GP12	17	52, 63, 64	105 62	38 300(*)	600	100	Other fluids (Remark 14)
	BT25 - GP12	18	52, 63, 64	105 62	38 300(*)	600	100	Any fluids, water steam excepted (Remark 14)
	BT28 - GP11	19	52	50	264			Water steam (Remark 12)
	BT28 - GP12	19	52, 63, 64	120 80	38 300(*)	600	100	Other fluids (Remark 14)
	BT29 - G41	20	52, 63, 64	165 100	38 300(*)	900	160	Any fluids, water steam excepted (Remark 14)
	BT33 - G52	22	51	90	302			Water steam
	BT32 - G52	23	51	103	313			Water steam
	BT26 & BT27	26	52, 55, 61, 62, 63, 64			(600)		Any fluids, water steam excepted (Remark 10)
Bicolour	BC24 - GP11	24	52	20	211			Water steam
	BC28 - GP11	24	52	40	249			Water steam
	BC33 - G52	24	52	90	302			Water steam
	BC32 - G52	24	51	103	313			Water steam
	BC1 - G55	25	51	210	368			Water steam

NOTE:

(*) Maximum allowable temperature according to DIN 7081 / 1999-05. For operating condition with temperature over 300 °C, please apply to our Sales or Technical department.

(**) The shown rating is an indication only: level gauge rating can change according the level gauge valve fitted on it. See al so notes on page 5 and apply to us for further information

Fig. 706 Material Schedule	Body and wetted pieces	Trim of shut-off valves (Remark 8)	Remarks	Application
51	Forged carbon steel	Stainless steel		
52	Forged carbon steel	Stainless steel	Exclusion of copper, silver and their alloys	General purpose
55	Forged carbon steel ASTM A350 LF2	Stainless steel AISI 316	Exclusion of copper, silver and their alloys	Non corrosive fluids at low temperature up to –45,6 °C (–50 °F)
61	Forged stainless steel AISI 304	Stainless steel AISI 316	External not wetted parts of stainless steel AISI 304	Corrosive fluids and/or fluids at temperature lower than –45,6 °C (–50 °F)
62	Forged stainless steel AISI 304	Stainless steel AISI 316	External not wetted parts of carbon steel. Exclusion of copper, silver and their alloys.	Corrosive fluids
63	Forged stainless steel AISI 316	Stainless steel AISI 316	External not wetted parts of stainless steel AISI 304	Corrosive fluids and/or fluids at temperature lower than –45,6 °C (–50 °F)
64	Forged stainless steel AISI 316	Stainless steel AISI 316	External not wetted parts of carbon steel. Exclusion of copper, silver and their alloys.	Corrosive fluids
SPECIAL	For some types of level gauges we have normally available components made of different nuances of AISI 316, Monel 400 (ASTM B164 - Class A), Hastelloy B, Hastelloy C, Incoloy 825, Carpenter 20 CB 3, Nickel, Titanium, Ebonite, PVC, Polypropylene, PTFE. Apply to us for other materials.			

1 The tag indicating the type of the level gauge consists of two parts that define:
– the type of the level gauge body
– the type of the set of valves.

2 The level gauges having their tag followed by a “Z” are special constructions. They are suitable for operating conditions different than the ones shown in Fig. 864 for the corresponding standard type.

3 The nominal passage diameter in the BONETTI level gauges is 10 mm, if not otherwise indicated. Only the gauge bodies type BR25 and BT25 have a “large chamber” with 40 mm inside diameter and are usually used where the medium boils surges.

4 The ASME ratings and the operating conditions shown in Fig. 864 refer to size 9. For smaller sizes the operating conditions an be higher. See diagrams on each description page or apply to us.

5 The classification shown in the column “ASME ratings» could be modified by temperature operating condition, due to the maximum limit temperature suitable for the glass according DIN 7081/199-05. As shown in the Table of Fig. 864 the maximum operating conditions are generally higher than those of ASME rating. Apply to us for further information.

6 The ASME ratings and the operating conditions shown in Fig. 864 refer to standard materials as carbon steel, stainless steel, Hastelloy and to standard glass joints. When special materials (Monel, Nickel, Ebonite, PVC, etc.) and/or special joints (pure PTFE, Kel-F, etc.) are required, the maximum operating conditions have to be verified.

7 In Fig. 706 are indicated the main Material schedules currently manufactured. Boldface are given the ones of major diffusion.

8 In Fig. 706 is indicated the material of the piston for the set of valves type GP11 and GP12. For a detailed list of material currently employed on shut-off valves, refer to tables shown on the pages illustrating the level gauges valves (from page 27 to page 33)

9 For type BR13-G51, the ASME rating is an indication only.

10 Types BR26, BR27, BT26, BT27 are manufactured for ASME 600 rating. Anyway the operating conditions must take into consideration the vessel project, the welding difficulties on the vessel of the level gauge body and especially that there are no shut-off fittings.

11 The type BTV-GP11 is equipped with a glass transparent tube. Because of its brittleness this level gauge can be used with dangerless fluids only, although in presence of glass protector.

12 In case the level gauge must be fitted directly on a steam boiler drum, please state it clearly.

13 Most of Figures show the level gauges fitted with the Sets type GP11, GP12 (Fig. 834 page 29). They can also be fitted with Sets G41, G42, GS41, GS42 (see pages 30 and 31). In the latter case the level gauges identification tag changes after the hyphen, e.g. from BR24-GP11 to BR24-G41. The maximum operating conditions, ratings and applications are a function of the gauge body, therefore Fig. 864 and 706 are still valid.

14 In case of fluid corrosive for the glass, please refer to our Technical department to define maximum allowable tempeature and glass protection.

Reflex **BONETTI** Level Gauges type BR14 with GP11 and G11 valves

Fig. 836.1 **Type BR14-GP11**

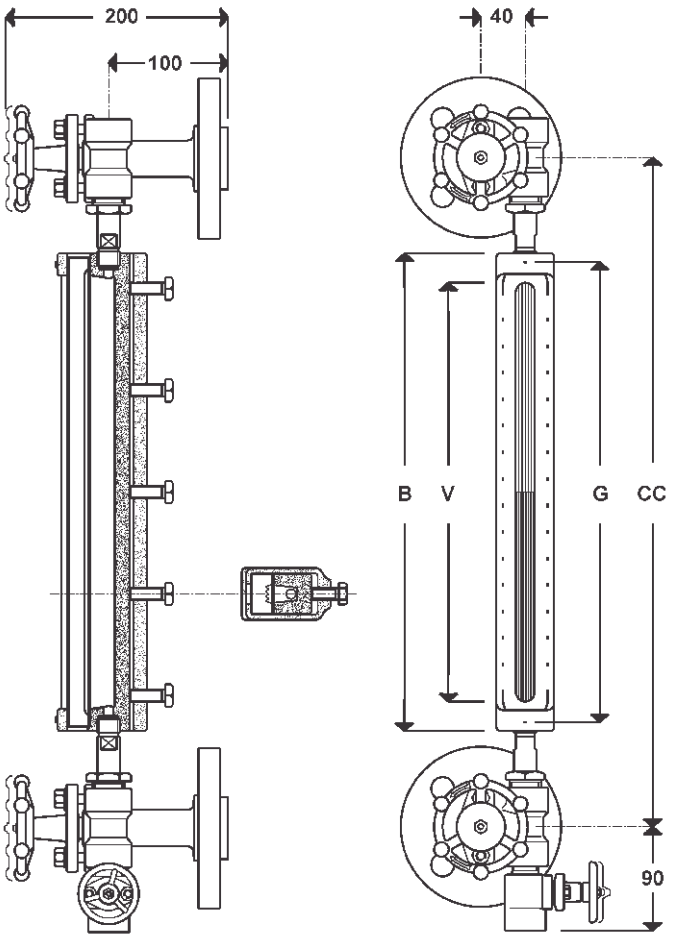

Size	Length of glass G	length of body B	Visible length V	CC min. with GP11	CC min. with G11	Weight kg
3	165	178	145	291	279	9,0
4	190	203	170	316	304	9,4
5	220	233	200	346	334	9,8
6	250	263	230	376	364	10,3
7	280	293	260	406	394	10,8
8	320	333	300	446	434	11,3
9	340	353	320	466	454	11,7

1 Connections between gauge and valves are made by end tues and stuffing boxes.

2 According to the position of the shut-off valves compared with the gauge body, the level gauge is named “right-handed” or “left-handed”. Fig. 836.1 shows a left-handed gauge. Each level gauge can be assembled right-handed or left-handed. Usually two level gauges (1 right and 1 left) are installed on steam vessels.

3 According to some Steam Boiler Regulations, the visible length of the level gauges installed on steam boilers must be not shorter than a fixed length. Therefore the suitability of the smaller sizes must be checked.

4 When ordering a level gauge please state:
– Centre to centre distance between connections (CC)
– Standard, Size and Finishing of connections
– Whether right-handed or left-handed.

5 Flanges are finished to customer prescriptions. Please state:
– Standard – Size
– Pressure class – Finishing
The inside passage through the gauge is 10 mm.

6 Instead of flanges, connections can be delivered with threaded ends. Standard is 3/4” NPT, union. Other Standard and size on request.

7 BR14 gauges are fitted with reflex glasses type A (see page 38).

8 Operating conditions and material schedules on pages 4 and 5.

9 Applicable optionals and bolting torques on pages 27, 36, 37.

Reflex **BONETTI** Level Gauges

type BR12 with GP11, GP12, G11 and G12 valves

Fig. 837 **Type BR12-GP11**

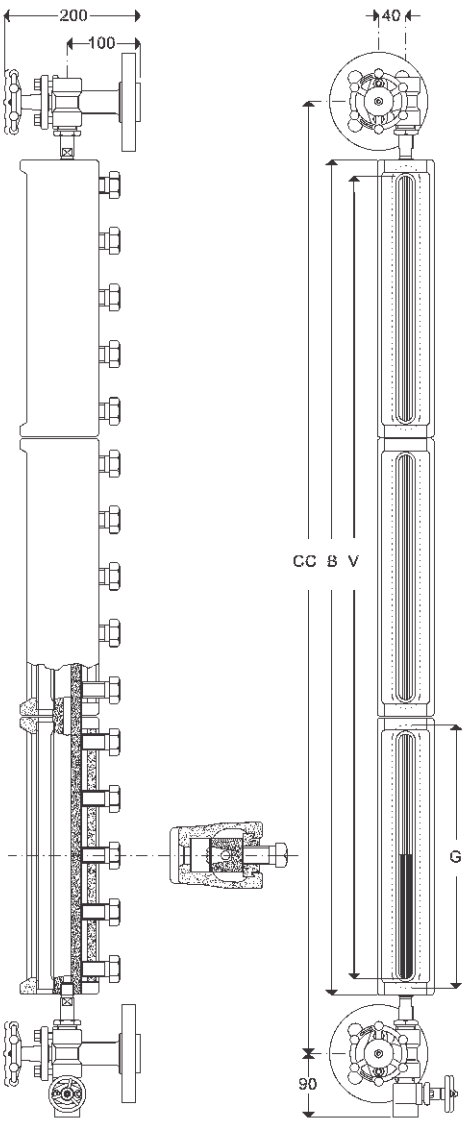

Size	Length of glass G	Length of body B	Visible length V	CC min. with GP11	CC min. with GP12	CC min. with G11	CC min. with G12	Weight kg
1	115	128	95	241	209	229	182	11,7
2	140	153	120	266	234	254	207	12,1
3	165	178	145	291	259	279	232	12,9
4	190	203	170	316	284	304	257	13,3
5	220	233	200	346	314	334	287	14,1
6	250	263	230	376	344	364	317	15
7	280	293	260	406	374	394	347	15,5
8	320	333	300	446	414	434	387	16,5
9	340	353	320	466	434	454	407	17,2
2x4	190	413	380	526	494	514	467	18,2
2x5	220	473	440	586	554	574	527	19,8
2x6	250	533	500	646	614	634	587	21,7
2x7	280	593	560	706	674	694	647	22,6
2x8	320	673	640	786	754	774	727	24,6
2x9	340	713	680	826	794	814	767	26
3x6	250	803	770	916	884	904	857	28,4
3x7	280	893	860	1006	974	994	947	29,8
3x8	320	1013	980	1126	1094	1114	1067	32,8
3x9	340	1073	1040	1186	1154	1174	1127	34,9
4x7	280	1193	1160	1306	1274	1294	1247	36,9
4x8	320	1353	1320	1466	1434	1454	1407	40,9
4x9	340	1433	1400	1546	1514	1534	1487	43,7
5x7	280	1493	1460	1606	1574	1594	1547	44,3
5x8	320	1693	1660	1806	1774	1794	1747	49,1
5x9	340	1793	1760	1906	1874	1894	1847	52,6
6x8	320	2033	2000	2146	2114	2134	2087	57,2
6x9	340	2153	2120	2266	2234	2254	2207	61,4
7x9	340	2513	2480	2626	2594	2614	2567	70,3

1 Connections between gauge and valves are made:
- for BR12 with GP11 or G11, by end tubes and stuffing boxes
- for BR12 with GP12 or G12, by NPT screwed nipples.

2 According to the position of the shut-off valves compared with the gauge body, the level gauge is named “right-handed” or “left-handed”. Fig. 837 shows a left-handed gauge. Each level gauge can be assembled right-handed or left-handed. Usually two level gauges (1 right and 1 left) are installed on steam vessels.

3 According to some Steam Boiler Regulations, the visible length of the level gauges installed on steam boilers must be not shorter than a fixed length. Therefore the suitability of the smaller sizes must be checked.

4 When ordering a level gauge please state:
– Centre to centre distance between connections (CC)
– Standard, Size and Finishing of connections
– Whether right-handed or left-handed.

5 Flanges are finished to customer prescriptions. Please state:
– Standard – Size
– Pressure class – Finishing
The inside passage through the gauge is 10 mm.

6 Instead of flanges, connections can be delivered with threaded ends. Standard is 3/4” NPT, union. Other Standard and size on request.

7 BR12 gauges are fitted with reflex glasses type A (see page 38).

8 Operating conditions and material schedules on pages 4 and 5.

9 Applicable optionals and bolting torques on pages 27, 36, 37.

10 Gauge bodies without valves can be supplied:
– end connected (threaded or flanged)
– side connected (threaded or flanged)
– back connected (threaded or flanged).
Please state connecting dimensions and Standard.

Reflex **BONETTI** Level Gauges

type BR22 with GP11, GP12, G41/42 and GS41/42 valves

Fig. 838.1 **Type BR22-GP11**

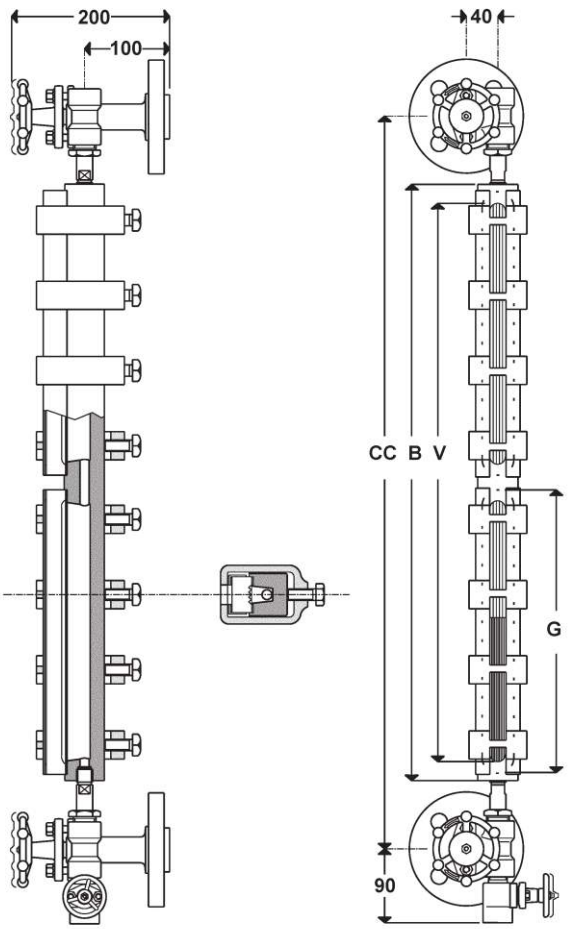

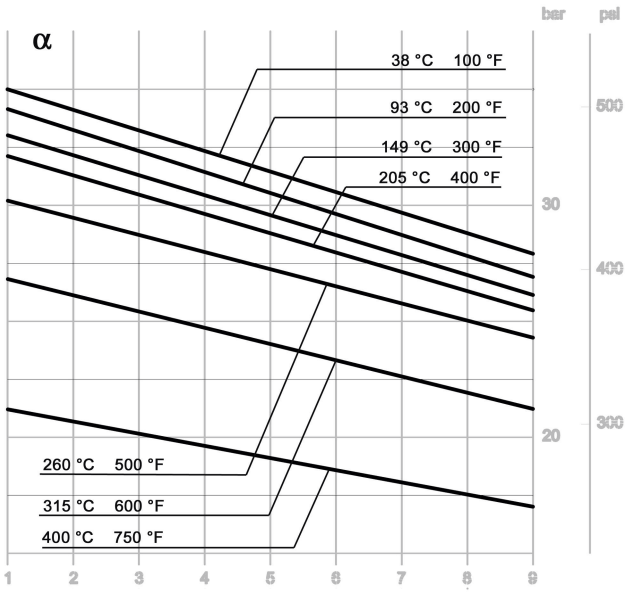

Size	Length of glass G	Length of body B	Visible length V	CC min. with GP11	CC min. with GP12	Weight kg	CC min. with G & GS 41 & 42	Weight kg
1	115	128	95	241	209	10,0	218	15,0
2	140	153	120	266	234	10,3	243	15,7
3	165	178	145	291	259	10,8	268	16,2
4	190	203	170	316	284	11,1	293	16,5
5	220	233	200	346	314	11,3	323	16,7
6	250	263	230	376	344	12,0	353	17,4
7	280	293	260	406	374	12,2	383	17,6
8	320	333	300	446	414	12,8	423	18,2
9	340	353	320	466	434	13,0	443	18,4
2x4	190	413	380	526	494	13,9	503	19,3
2x5	220	473	440	586	554	14,4	563	19,8
2x6	250	533	500	646	614	15,7	623	21,1
2x7	280	593	560	706	674	16,1	683	21,5
2x8	320	673	640	786	754	17,4	763	22,8
2x9	340	713	680	826	794	17,8	803	23,2
3x6	250	803	770	916	884	19,4	893	24,8
3x7	280	893	860	1006	974	20,0	983	25,4
3x8	320	1013	980	1126	1094	21,9	1103	27,3
3x9	340	1073	1040	1186	1154	22,5	1163	27,9
4x7	280	1193	1160	1306	1274	23,9	1283	29,3
4x8	320	1353	1320	1466	1434	26,5	1443	31,9
4x9	340	1433	1400	1546	1514	27,3	1523	32,7
5x7	280	1493	1460	1606	1574	27,8	1583	33,2
5x8	320	1693	1660	1806	1774	31,0	1783	36,4
5x9	340	1793	1760	1906	1874	32,0	1883	37,4
6x8	320	2033	2000	2146	2114	35,6	2123	41,0
6x9	340	2153	2120	2266	2234	36,8	2243	42,2
7x9	340	2513	2480	2626	2594	41,5	2603	46,9

1 Connections between gauge and valves are made
– for BR22-GP11, by end tubes and stuffing boxes
– for BR22-GP12, by NPT screwed nipples
– for BR22-G41/42 & GS41/42, by NPT screwed nipples.
Minimum CC distance, shown on table is referred to 1/2” NPT connections.
On request 3/4” NPT connection can be supplied.

2 According to the position of the shut-off valves compared with the gauge body, the level gauge is named “right-handed” or “left-handed”. Fig. 838.1 shows a left-handed gauge. Each level gauge can be assembled right-handed or left-handed. Usually two level gauges (1 right and 1 left) are installed on steam vessels.

3 According to some Steam Boiler Regulations, the visible ength of the level gauges installed on steam boilers must be not shorter than a fixed length. Therefore the suitability of the smaller sizes must be checked.

4 When ordering a level gauge please state:
– Centre to centre distance between connections (CC)
– Standard, Size and Finishing of connections
– Whether right-handed or left-handed.

5 Flanges are finished to customer prescriptions. Please state:
– Standard – Size
– Pressure class – Finishing
The inside passage through the gauge is 10 mm.

6 Instead of flanges, connections can be delivered with threaded ends. Standard is 3/4” NPT, union. Other Standard and size on request.

7 BR22 gauges are fitted with reflex glasses type B (see page 38).

8 Operating conditions and material schedules on pages 4 and 5. Graph below shows rating for size 9 and smaller, combined included.

9 Applicable optionals and bolting torques on pages 27, 36, 37.

10 Gauge bodies without valves can be supplied:
– end connected (threaded or flanged)
– side connected (threaded or flanged)
– back connected (threaded or flanged).
Please state connecting dimensions and Standard.

11 For level gauges type BR22-G41, BR22-G42, BR22-GS41, BR22-GS42, see page 30-31.

Reflex **BONETTI** Level Gauges

type BR23 with GP11, GP12, G41/42 and GS41/42 valves

Fig. 839.1 **Type BR23-GP11**

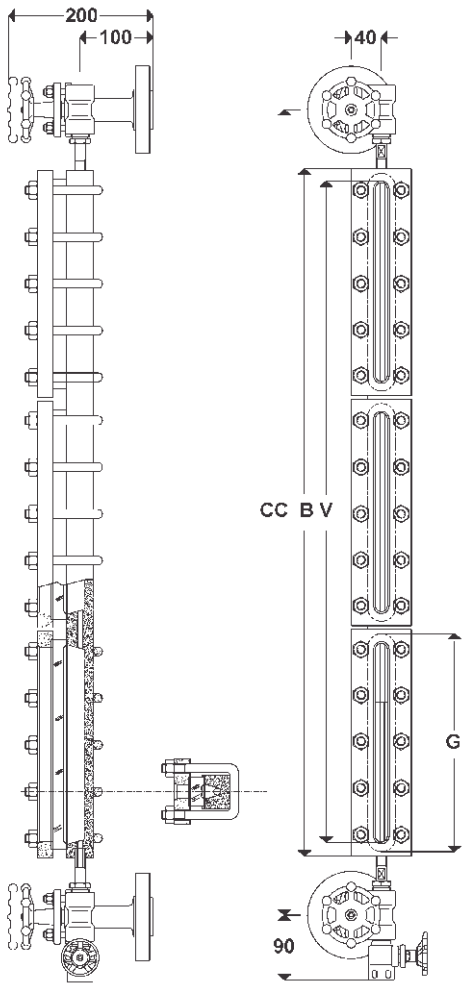

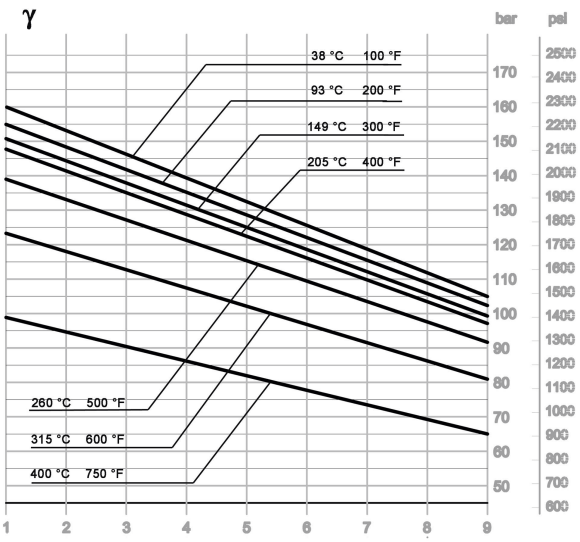

Size	Length of glass G	Length of body B	Visible length V	CC min. with GP11	CC min. with GP12	Weight kg	CC min. with G & GS 41 & 42	Weight kg
1	115	128	95	241	209	10,4	218	15,8
2	140	153	120	266	234	10,8	243	16,2
3	165	178	145	291	259	11,7	268	17,1
4	190	203	170	316	284	12,2	293	17,6
5	220	233	200	346	314	13,0	323	18,4
6	250	263	230	376	344	13,9	353	19,3
7	280	293	260	406	374	14,2	383	19,6
8	320	333	300	446	414	15,2	423	20,6
9	340	353	320	466	434	15,7	443	21,1
2x4	190	413	380	526	494	18,0	503	23,4
2x5	220	473	440	586	554	19,5	563	24,9
2x6	250	533	500	646	614	21,4	623	26,8
2x7	280	593	560	706	674	22,0	683	27,4
2x8	320	673	640	786	754	23,9	763	29,3
2x9	340	713	680	826	794	24,9	803	30,3
3x6	250	803	770	916	884	28,9	893	34,3
3x7	280	893	860	1006	974	29,7	983	35,1
3x8	320	1013	980	1126	1094	32,7	1103	38,1
3x9	340	1073	1040	1186	1154	34,2	1163	39,6
4x7	280	1193	1160	1306	1274	37,5	1283	42,9
4x8	320	1353	1320	1466	1434	41,5	1443	46,9
4x9	340	1433	1400	1546	1514	43,5	1523	48,9
5x7	280	1493	1460	1606	1574	45,3	1583	50,7
5x8	320	1693	1660	1806	1774	50,2	1783	55,6
5x9	340	1793	1760	1906	1874	52,8	1883	58,2
6x8	320	2033	2000	2146	2114	58,1	2123	63,5
6x9	340	2153	2120	2266	2234	62,0	2243	67,4
7x9	340	2513	2480	2626	2594	71,3	2603	76,7

1 Connections between gauge and valves are made
– for BR23-GP11, by end tubes and stuffing boxes
– for BR23-GP12, by NPT screwed nipples
– for BR23-G41/42 & GS41/42, by NPT screwed nipples.
Minimum CC distance, shown on table is referred to 1/2” NPT connections. On request 3/4” NPT connection can be supplied.

2 According to the position of the shut-off valves compared with the gauge body, the level gauge is named “right-handed” or “left-handed”. Fig. 839.1 shows a left-handed gauge. Each level gauge can be assembled right-handed or left-handed. Usually two level gauges (1 right and 1 left) are installed on steam vessels.

3 According to some Steam Boiler Regulations, the visible length of the level gauges installed on steam boilers must be not shorter than a fixed length. Therefore the suitability of the smaller sizes must be checked.

4 When ordering a level gauge please state:
– Centre to centre distance between connections (CC)
– Standard, Size and Finishing of connections
– Whether right-handed or left-handed.

5 Flanges are finished to customer prescriptions. Please state:
– Standard – Size
– Pressure class – Finishing
The inside passage through the gauge is 10 mm.

6 Instead of flanges, connections can be delivered with threaded ends. Standard is 3/4” NPT, union. Other Standard and size on request.

7 BR23 gauges are fitted with reflex glasses type B (see page 38).

8 Operating conditions and material schedules on pages 4 and 5. Graph below shows rating for size 9 and smaller, combined included.

9 Applicable optionals and bolting torques on pages 27, 36, 37
.

10 Gauge bodies without valves can be supplied:
– end connected (threaded or flanged)
– side connected (threaded or flanged)
– back connected (threaded or flanged).
Please state connecting dimensions and Standard.

11 For level gauges type BR23-G41, BR23-G42, BR23-GS41, BR23-GS42, see page 30-31.

Reflex **BONETTI** Level Gauges

Type BR24 with GP11, GP12, G41/42 and GS41/42 valves

Fig. 840.1 **Type BR24-GP11**

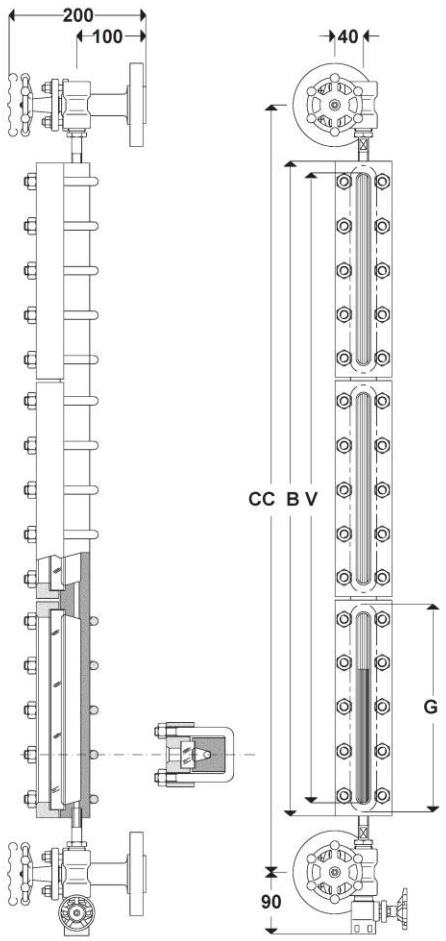

Size	Length of glass G	Length of body B	Visible length V	CC min. with GP11	CC min. with GP12	Weight kg	CC min. with G & GS 41 & 42	Weight kg
1	115	128	95	241	209	11,3	218	16,7
2	140	153	120	266	234	11,8	243	17,2
3	165	178	145	291	259	12,8	268	18,2
4	190	203	170	316	284	13,3	293	18,7
5	220	233	200	346	314	14,3	323	19,7
6	250	263	230	376	344	15,3	353	20,7
7	280	293	260	406	374	15,8	383	21,2
8	320	333	300	446	414	16,9	423	22,3
9	340	353	320	466	434	17,7	443	23,1
2x4	190	413	380	526	494	19,2	503	24,6
2x5	220	473	440	586	554	21,3	563	26,7
2x6	250	533	500	646	614	23,1	623	28,5
2x7	280	593	560	706	674	24,4	683	29,8
2x8	320	673	640	786	754	26,3	763	31,7
2x9	340	713	680	826	794	27,9	803	33,3
3x6	250	803	770	916	884	31,0	893	36,4
3x7	280	893	860	1006	974	33,0	983	38,4
3x8	320	1013	980	1126	1094	35,7	1103	41,1
3x9	340	1073	1040	1186	1154	38,1	1163	43,5
4x7	280	1193	1160	1306	1274	41,7	1283	47,1
4x8	320	1353	1320	1466	1434	45,1	1443	50,5
4x9	340	1433	1400	1546	1514	48,2	1523	53,6
5x7	280	1493	1460	1606	1574	50,3	1583	55,7
5x8	320	1693	1660	1806	1774	54,6	1783	60,0
5x9	340	1793	1760	1906	1874	58,4	1883	63,8
6x8	320	2033	2000	2146	2114	64,0	2123	69,4
6x9	340	2153	2120	2266	2234	68,6	2243	74,0
7x9	340	2513	2480	2626	2594	78,7	2603	84,1

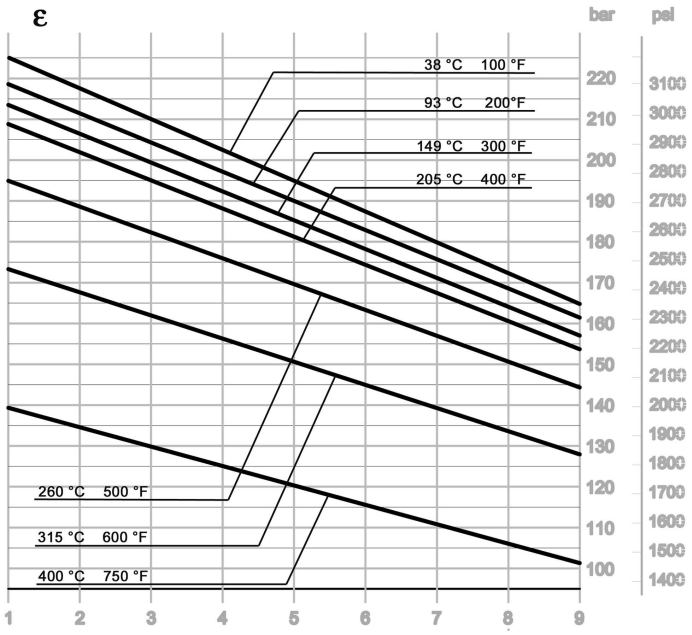

1 Connections between gauge and valves are made
– for BR24-GP11, by end tubes and stuffing boxes
– for BR24-GP12, by NPT screwed nipples
– for BR24-G41/42 & GS41/42, by NPT screwed nipples.
Minimum CC distance, shown on table is referred to 1/2” NPT connections. On request 3/4” NPT connection can be supplied.

2 According to the position of the shut-off valves compared with the gauge body, the level gauge is named “right-handed” or “left-handed”. Fig. 840.1 shows a left-handed gauge. Each level gauge can be assembled right-handed or left-handed. Usually two level gauges (1 right and 1 left) are installed on steam vessels.

3 According to some Steam Boiler Regulations, the visible length of the level gauges installed on steam boilers must be not shorter than a fixed length. Therefore the suitability of the smaller sizes must be checked.

4 When ordering a level gauge please state:
– Centre to centre distance between connections (CC)
– Standard, Size and Finishing of connections
– Whether right-handed or left-handed.

5 Flanges are finished to customer prescriptions. Please state:
– Standard – Size
– Pressure class – Finishing
The inside passage through the gauge is 10 mm.

6 Instead of flanges, connections can be delivered with threaded ends. Standard is 3/4” NPT, union. Other Standard and size on request.

7 BR24 gauges are fitted with reflex glasses type B (see page 38).

8 Operating conditions and material schedules on pages 4 and 5. Graph below shows rating for size 9 and smaller, combined included.

9 Applicable optionals and bolting torques on pages 27, 36, 37.

10 Gauge bodies without valves can be supplied:
– end connected (threaded or flanged)
– side connected (threaded or flanged)
– back connected (threaded or flanged).
Please state connecting dimensions and Standard.

11 For level gauges type BR24-G41, BR24-G42, BR24-GS41, BR24-GS42, see page 30-31.

Reflex **BONETTI** Level Gauges

type BR28 with GP12, G41/42 and GS41/42 valves

Fig. 856
Type BR28-G41

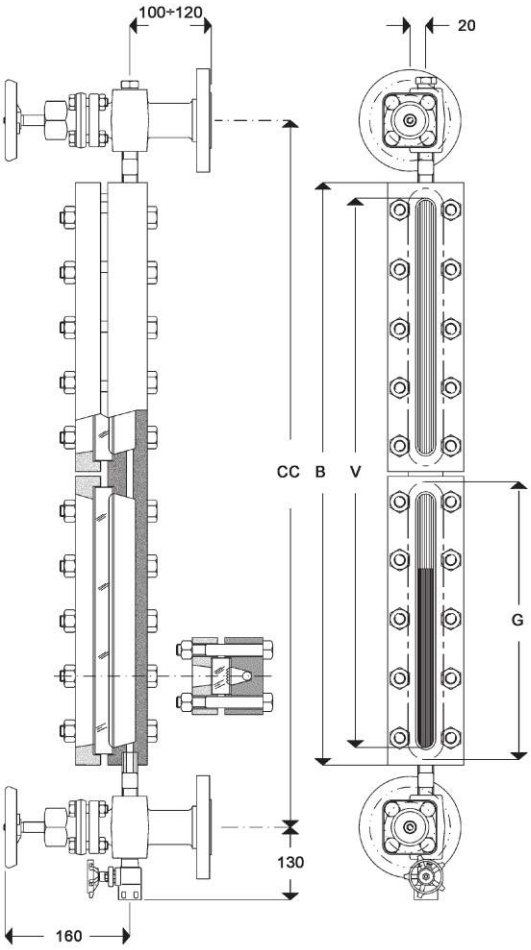

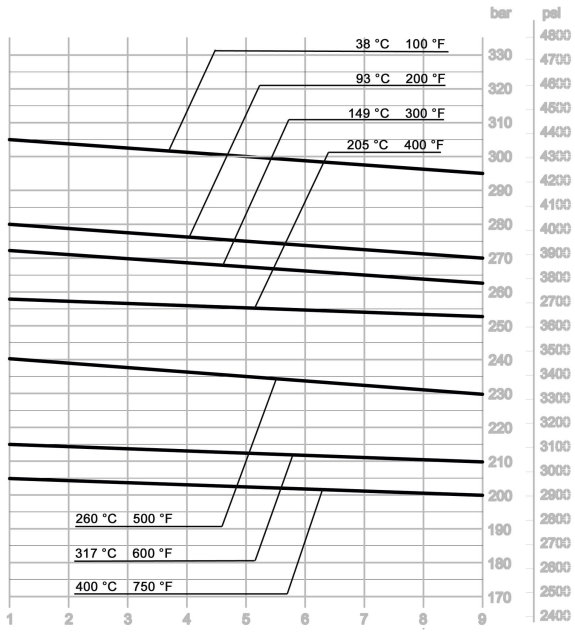

Size	Length of glass G	Length of body B	Visible length V	CC min. with GP12	Weight kg	CC min. with G & GS 41 & 42	Weight kg
1	115	165	95	246	18,8	255	24,2
2	140	190	120	271	19,6	280	25,0
3	165	215	145	296	20,5	305	25,9
4	190	240	170	321	21,5	330	26,9
5	220	270	200	351	22,7	360	28,1
6	250	300	230	381	24,1	390	29,5
7	280	330	260	411	25,4	420	30,8
8	320	370	300	451	26,8	460	32,2
9	340	390	320	471	27,7	480	33,1
2x4	190	450	380	531	38,9	540	44,3
2x5	220	510	440	591	41,3	600	46,7
2x6	250	570	500	651	44,1	660	49,5
2x7	280	630	560	711	46,7	720	52,1
2x8	320	710	640	791	49,5	800	54,9
2x9	340	750	680	831	51,3	840	56,7
3x6	250	840	770	921	64,1	930	69,5
3x7	280	930	860	1011	68,0	1020	73,4
3x8	320	1050	980	1131	72,2	1140	77,6
3x9	340	1110	1040	1191	74,9	1200	80,3
4x7	280	1230	1160	1311	89,3	1320	94,7
4x8	320	1390	1320	1471	94,9	1480	100,3
4x9	340	1470	1400	1551	98,5	1560	103,9
5x7	280	1530	1460	1611	110,6	1620	116,0
5x8	320	1730	1660	1811	117,6	1820	123,0
5x9	340	1830	1760	1911	122,1	1920	127,5
6x8	320	2070	2000	2151	140,3	2160	145,7
6x9	340	2190	2120	2271	145,7	2280	151,1
7x9	340	2550	2480	2631	169,3	2640	174,7

1 Connections between gauge and valves are made
– for BR28-GP11, by end tubes and stuffing boxes
– for BR28-GP12, by NPT screwed nipples
– for BR28-G41/42 & GS41/42, by NPT screwed nipples.
Gauge/valve standard NPT connection is 1/2”. On request3/4” NPT connection can be supplied.

2 According to the right of left position of the stop valves handle of the gauge body, the level gauges are named right handled or left-handed. Fig. 856 shows a left-handed level gauges.

3 When ordering a level gauge please state:
– Centre to centre distance between connections (CC)
– Standard, Size and Finishing of connections
– Whether right-handed or left-handed.

4 Flanges are finished to customer prescriptions. Please state:
– Standard – Size
– Pressure class – Finishing
The inside passage through the gauge is 12,5 mm.

5 Instead of flanges, connections can be delivered with threaded ends.It is standard 3/4” NPT union.

6 BR28 gauges are fitted with reflex glasses type B (see page 38).

7 Operating conditions and material schedules on pages 4 and 5. Graph below shows rating for size 9 and smaller, combined included.

8 Applicable optionals and bolting torques on pages 27, 36, 37.

9 Gauge bodies without valves can be supplied:
– end connected (threaded or flanged)
– side connected (threaded or flanged)
– back connected (threaded or flanged).
Please state connecting dimensions and Standard.

10 For level gauges type BR28-G42, BR28-GS41, BR28-GS42, see page 30-31.

Reflex **BONETTI** Level Gauges

type BR25 with GP12, G41/42 and GS41/42 valves

Fig. 841 **Type BR25-GP12**

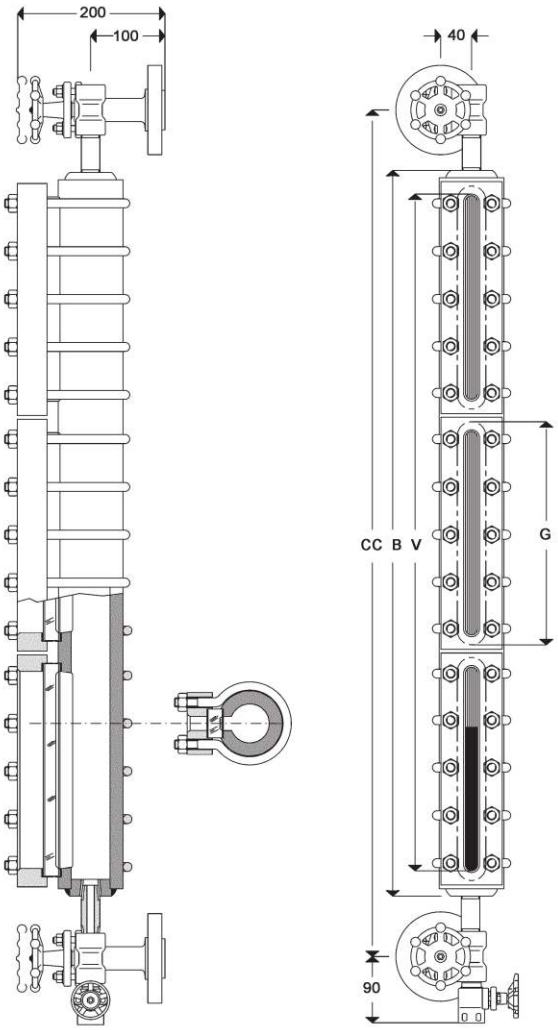

Size	Length of glass G	Length of body B	Visible length V	CC min. with GP12	Weight kg	CC min. with G & GS 41 & 42	Weight kg
1	115	158	95	239	14,4	248	19,8
2	140	183	120	264	15,5	273	20,9
3	165	208	145	289	16,6	298	22,0
4	190	233	170	314	18,6	323	24,0
5	220	263	200	344	19,0	353	24,4
6	250	293	230	374	20,3	383	25,7
7	280	323	260	404	22,8	413	28,2
8	320	363	300	444	23,3	453	28,7
9	340	383	320	464	24,2	473	29,6
2x4	190	443	380	524	26,6	533	32,0
2x5	220	503	440	584	29,2	593	34,6
2x6	250	563	500	644	31,8	653	37,2
2x7	280	623	560	704	34,4	713	39,8
2x8	320	703	640	784	37,9	793	43,3
2x9	340	743	680	824	39,6	833	45,0
3x6	250	833	770	914	43,3	923	48,7
3x7	280	923	860	1004	47,2	1013	52,6
3x8	320	1043	980	1124	52,4	1133	57,8
3x9	340	1103	1040	1184	55,0	1193	60,4
4x7	280	1223	1160	1304	60,0	1313	65,4
4x8	320	1383	1320	1464	66,9	1473	72,3
4x9	340	1463	1400	1544	70,4	1553	75,8
5x7	280	1523	1460	1604	72,8	1613	78,2
5x8	320	1723	1660	1804	81,5	1813	86,9
5x9	340	1823	1760	1904	85,8	1913	91,2
6x8	320	2063	2000	2144	96,0	2153	101,4
6x9	340	2183	2120	2264	101,2	2273	106,6
7x9	340	2543	2480	2624	116,6	2633	122,0

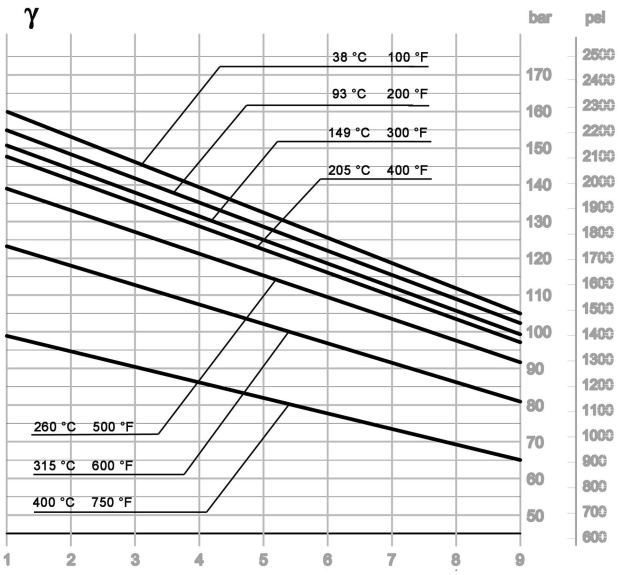

1 Type BR25-GP12 level gauge is LARGE CHAMBERED. The gauge body is machined from a tube having thick wall and internal Ø of about 40 mm. Large chamber level gauges should be used where the medium boils or surges.

2 Connections between gauge and valves are made by NPT screwed nipples. Minimum CC distance, shown on table is referred to 1/2" NPT connections. On request 3/4" NPT connection can be supplied.

3 According to the position of the shut-off valves compared with the gauge body, the level gauge is named "right-handed" or "left-handed". Fig. 841 shows a left-handed gauge. Each level gauge can be assembled right-handed or left-handed.

4 When large chamber body is required with butt-welding end caps, length of body (B) and minimum C. to C. (CC min) have to be increased of 40 mm.

5 When ordering a level gauge please state:
- Centre to centre distance between connections (CC)
- Standard, Size and Finishing of connections
- Whether right-handed or left-handed.

6 Flanges are finished to customer prescriptions. Please state:
– Standard – Size
– Finishing – Pressure class
The inside passage through the gauge is 40 mm.

7 Instead of flanges, connections can be delivered with threaded ends. Standard is 3/4" NPT, union. Other Standard and size on request.

8 BR25 gauges are fitted with reflex glasses type B (see page 38).

9 Operating conditions and material schedules on pages 4 and 5. Graph below shows rating for size 9 and smaller, combined included.

10 Applicable optionals and bolting torques on pages 27, 36, 37.

11 Gauge bodies without valves can be supplied:
- end connected (threaded or flanged)
- side connected (threaded or flanged)
- back connected (threaded or flanged).

Please state connecting dimensions and Standard.

12 For level gauges type BR25-G41, BR25-G42, BR25-GS41, BR25-GS42, see page 30-31.

Reflex **BONETTI** Level Gauges type BR13 with G51 valves

Fig. 857 **Type BR13-G51**

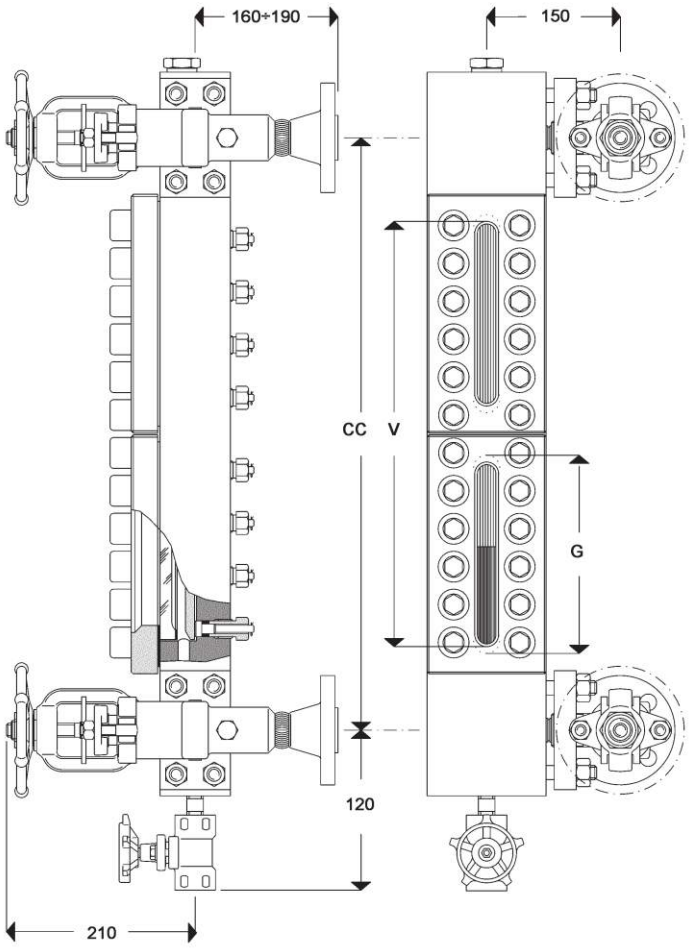

Size	Length of glass G	Length of body B	Visible length V	CC min. length	Weight
3	165	481	143	331	75
4	190	506	168	356	78
5	220	536	198	386	81
6	250	566	228	416	85
7	280	596	258	446	88
8	320	636	298	486	92
9	340	656	318	506	94
2x4	190	721	383	571	106
2x5	220	794	456	644	112
2x6	250	867	529	717	120
2x7	280	897	559	747	126
2x8	320	980	642	830	134
2x9	340	1043	705	893	138
3x6	250	1168	830	1018	155
3x7	280	1198	860	1048	164
3x8	320	1324	986	1174	176
3x9	340	1430	1092	1280	182
4x7	280	1499	1161	1349	202
4x8	320	1668	1330	1518	218
5x7	280	1800	1462	1650	225
4x9	340	1817	1479	1667	226
5x8	320	2012	1674	1862	260
5x9	340	2204	1866	2054	270
6x8	320	2356	2018	2206	302
6x9	340	2591	2253	2441	314
7x9	340	2978	2640	2828	358

1 Connections between gauge and valves are made by flanges. Gauge body cannot be rotated on its axis. Other connections on request.

2 According to the right or left position of the handwheel of the stop valves on the gauge body, the level gauges are named right-handed or left-handed fig. 857 shows a right-handed level gauge.

3 When ordering a level gauge please state:
- Centre to centre distance between connections (CC)
- Standard. Size and Finishing of connections
- Whether right-handed or left-handed.

4 Flanges are finished to customer prescriptions. Please state:
– Standard – Size
– Pressure class – Finishing
The inside passage through the gauge is at least 12,5 mm.

5 Instead of flanges, connections to vessel can be delivered with threaded ends or with weld ends.

6 BR13 gauges are fitted with reflex glasses type A-BR13 (see page 38), that ARE NOT COMPRESSED by the tightening screw. Joint Dimensions and Maintenance Instructions on request.

7 Operating conditions and material schedules on pages 4 and 5.

8 Applicable optionals and bolting torques on pages 27, 36, 37.

9 Gauge bodies without valves can be supplied:
– end connected (threaded or flanged)
– side connected (threaded or flanged)
– back connected (threaded or flanged).
Please state connecting dimensions and Standard.

Reflex **BONETTI** Level Gauges
Weld - on Bodies, type BR26 and BR27

Fig. 717 **Type BR26**

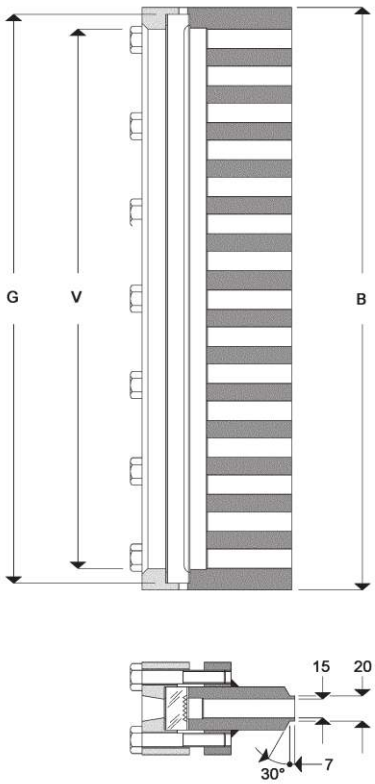

Fig. 821 **Type BR27**

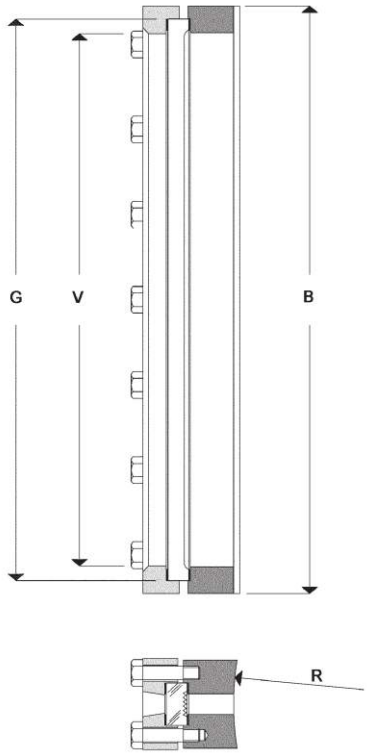

Size	Length of glass	Length of body	Visible length	Weight	
				BR26	BR27
	G	B	V	kg	kg
1	115	128	95	4.8	3.6
2	140	153	120	5.7	4.3
3	165	178	145	6.6	5.0
4	190	203	170	7.5	5.7
5	220	233	200	8.6	6.6
6	250	263	230	9.8	7.5
7	280	293	260	10.9	8.3
8	320	333	300	12.4	9.4
9	340	353	320	13.1	10.0

1 These gauge bodies are suitable for welding directly on the vessel. Therefore, no valves can be fitted between vessel and gauge, and incase of glass breakage, the fluid flowing from the vessel cannot be stopped.

2 It is necessary to control the suitability of the vessel wall, on which the gauge body is to be welded as this must not be excessively weakened by the holes or communicating window with the gauge. Steel plates to strengthen the vessel wall should be used whenever this is possible.

3 During the welding operation, be careful to not expose the gauge body for long time to high temperatures, as this might damage the flatness of the glass sealing surface.

4 For BR26 the connecting lip is provided to facilitate the welding operation.

5 When enquiring or ordering BR27 please state the external radius (R) of the vessel on which the gauge must be welded.

6 For visible lengths over 320 mm two or more single gauge bodies will have to be welded on the vessel. In this case it is advisable to fit the gauge bodies not along the same vertical line, but offset.

7 BR26 and BR27 are fitted with reflex glasses type B (see page 38).

8 Operating conditions and material schedules on pages 4 and 5.

9 Applicable optionals and bolting torques on pages 36, 37.

Tubular glass **BONETTI** Level Gauges type BTV-GP11

Fig. 842 **Type BTV-GP11**

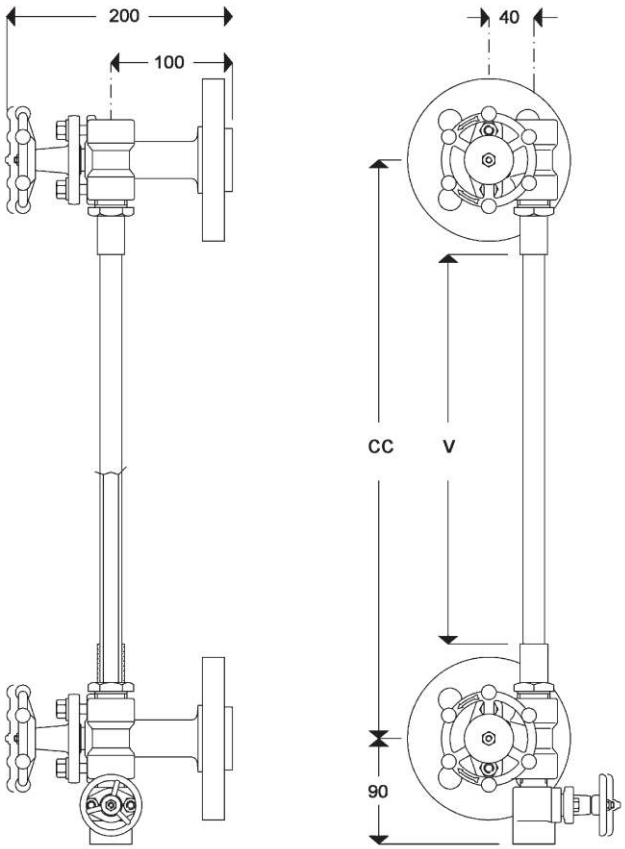

Fig. 720 **Fig. 721**

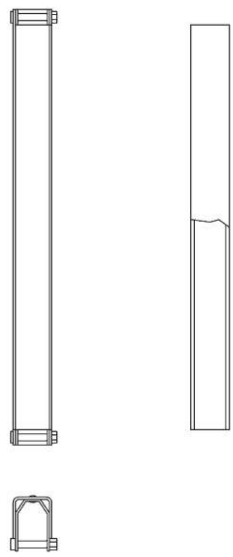

Dimensions:

Max C. to C.	CC max	= 2000 mm
Glass tube length	G	= CC –28 mm
Visible length	V	= CC –110 mm
Weight		nearly kg 7,0

1 Type BTV-GP11 level gauges are equipped with a transparent glass tube of 16 mm outside diameter. The limitation of the operating conditions is due to the glass tube, while the valves type GP11 are suitable for higher pressure and temperature.

2 As the glass tubes are usually found on sale up to a maximum standard length of about 2000 mm, when the centre to centre distance is longer than this size, the installation of several, cascade disposed level gauges or the application of an intermediate support with stuffing-boxes are necessary. In the latter case the length of each glass tube will be half the centre to centre distance minus 17 mm.

3 To protect the glass tube against shocks we supply on request
- U shaped metallic protector (Fig. 720) to be fixed to the stuffing box gland and/or
- acrylic resin tube protector (Fig. 721) sealed by O-Rings to the stuffing box gland.

4 According to the position of the shut-off valves compared with the gauge body, the level gauge is named “right-handed” or “left-handed”. Fig. 842 shows a left-handed gauge. Each level gauge can be assembled right-handed or left-handed. Usually two level gauges (1 right and 1 left) are installed on steam vessels.

5 When ordering a level gauge please state:
- Centre to centre distance between connections (CC)
- Standard, Size and Finishing of connections
- Whether right-handed or left-handed.

6 Flanges are finished to customer prescriptions. Please state:
– Standard – Size
– Pressure class – Finishing
The inside passage through the gauge is 10 mm.

7 Instead of flanges, connections can be delivered with threaded ends. Standard is 3/4” NPT, union. Other Standard and size on request.

8 BTV-GP11 gauges are fitted with glass tubes having 16 mm outside diameter and length equal to the centre to centre distance minus 28 mm.

9 Operating conditions and material schedules on pages 4 and 5.

10 Applicable optionals on pages 27 and 37.

Transparent **BONETTI** Level Gauges type BT23 with GP11, GP12, G41/42 and GS41/42 valves

Fig. 843.1 **Type BT23-GP11**

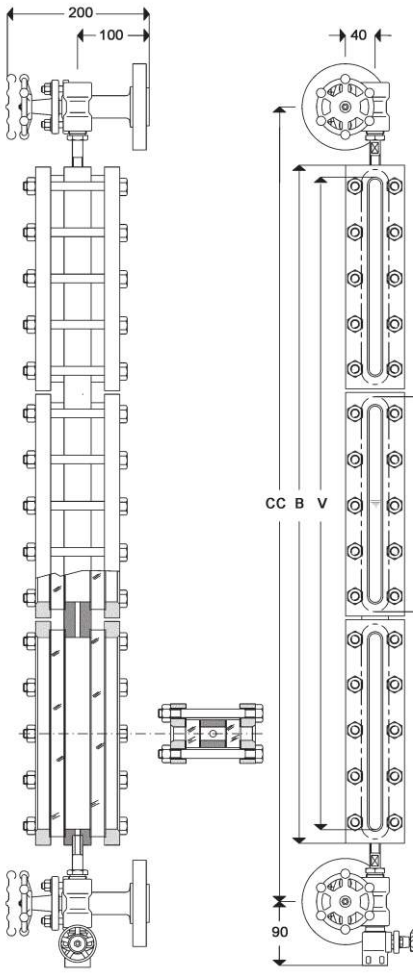

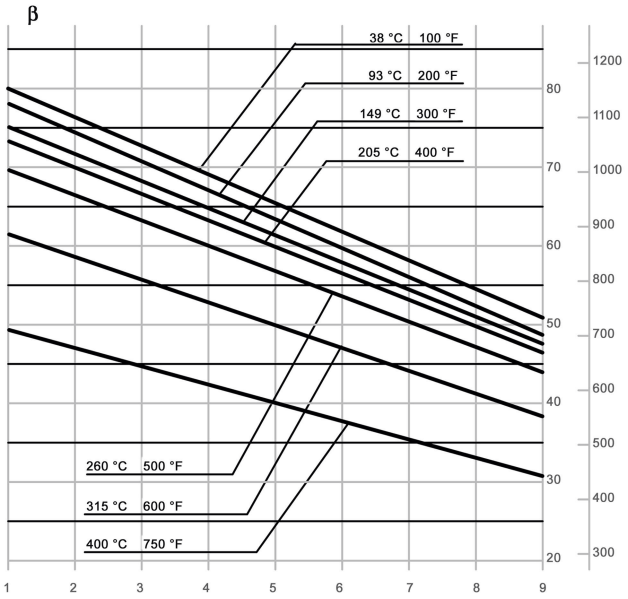

Size	Length of glass G	Length of body B	Visible length V	CC min. with GP11	CC min. with GP12	Weight kg	CC min. with G & GS 41 & 42	Weight kg
1	115	128	95	241	209	10,9	218	16,3
2	140	153	120	266	234	11,5	243	16,9
3	165	178	145	291	259	12,3	268	17,7
4	190	203	170	316	284	12,9	293	18,3
5	220	233	200	346	314	13,9	323	19,3
6	250	263	230	376	344	14,6	353	20,0
7	280	293	260	406	374	15,6	383	21,0
8	320	333	300	446	414	16,7	423	22,1
9	340	353	320	466	434	17,4	443	22,8
2x4	190	413	380	526	494	18,9	503	24,3
2x5	220	473	440	586	554	20,8	563	26,2
2x6	250	533	500	646	614	22,4	623	27,8
2x7	280	593	560	706	674	24,5	683	29,9
2x8	320	673	640	786	754	26,7	763	32,1
2x9	340	713	680	826	794	27,7	803	33,1
3x6	250	803	770	916	884	30,3	893	35,7
3x7	280	893	860	1006	974	33,2	983	38,6
3x8	320	1013	980	1126	1094	36,4	1103	41,8
3x9	340	1073	1040	1186	1154	38,6	1163	44,0
4x7	280	1193	1160	1306	1274	41,9	1283	47,3
4x8	320	1353	1320	1466	1434	46,3	1443	51,7
4x9	340	1433	1400	1546	1514	49,2	1523	54,6
5x7	280	1493	1460	1606	1574	50,7	1583	56,1
5x8	320	1693	1660	1806	1774	56,2	1783	61,6
5x9	340	1793	1760	1906	1874	59,8	1883	65,2
6x8	320	2033	2000	2146	2114	66,1	2123	71,5
6x9	340	2153	2120	2266	2234	70,4	2243	75,8
7x9	340	2513	2480	2626	2594	80,9	2603	86,3

1 Connections between gauge and valves are made
– for BT23-GP11, by end tubes and stuffing boxes
– for BT23-GP12, by NPT screwed nipples
– for BT23-G41/42 & GS41/42, by NPT screwed nipples.
Minimum CC distance, shown on table is referred to 1/2" NPT connections. On request 3/4" NPT connection can be supplied.

2 According to the position of the shut-off valves compared with the gauge body, the level gauge is named "right-handed" or "left-handed". Fig. 843.1 shows a left-handed gauge. Each level gauge can be assembled right-handed or left-handed. Usually two level gauges (1 right and 1 left) are installed on steam vessels.

3 According to some Steam Boiler Regulations, the visible length of the level gauges installed on steam boilers must be not shorter than a fixed length. Therefore the suitability of the smaller sizes must be checked.

4 When ordering a level gauge please state:
– Centre to centre distance between connections (CC)
– Standard, Size and Finishing of connections
– Whether right-handed or left-handed.

5 Flanges are finished to customer prescriptions. Please state:
– Standard – Size
– Finishing – Pressure class
The inside passage through the gauge is 10 mm.

6 Instead of flanges, connections can be delivered with threaded ends. Standard is 3/4" NPT, union. Other Standard and size on request.

7 BT23 gauges are fitted with transparent glasses type B (see page 38).

8 Operating conditions and material schedules on pages 4 and 5. Graph below shows rating for size 9 and smaller, combined included.

9 Applicable optionals and bolting torques on pages 27, 36, 37.

10 Gauge bodies without valves can be supplied:
– end connected (threaded or flanged)
– side connected (threaded or flanged)
– back connected (threaded or flanged).
Please state connecting dimensions and Standard.

11 For level gauges type BT23-G41, BT23-G42, BT23-GS41, BT23-GS42, see page 30-31.

Transparent **BONETTI** Level Gauges type BT24 with GP11, GP12, G41/42 and GS41/42 valves

Fig. 844.1 **Type BT24-GP11**

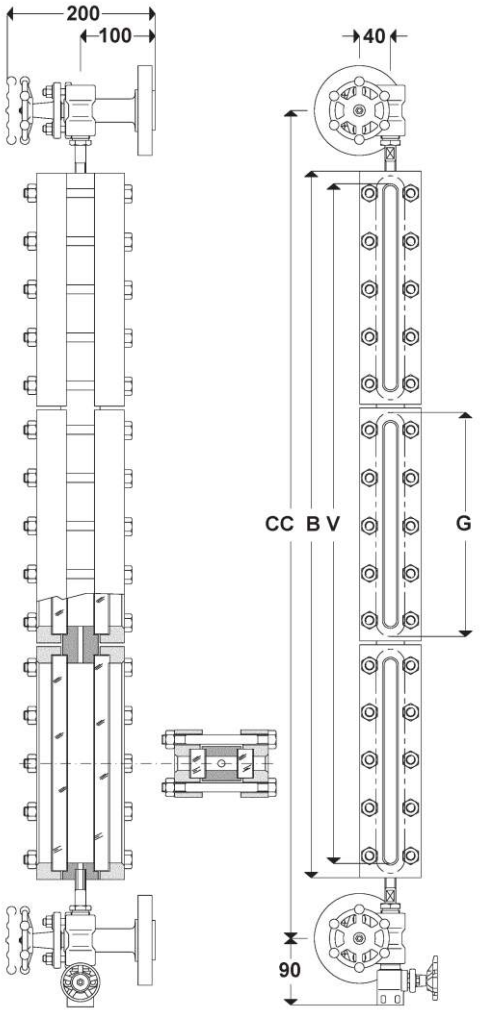

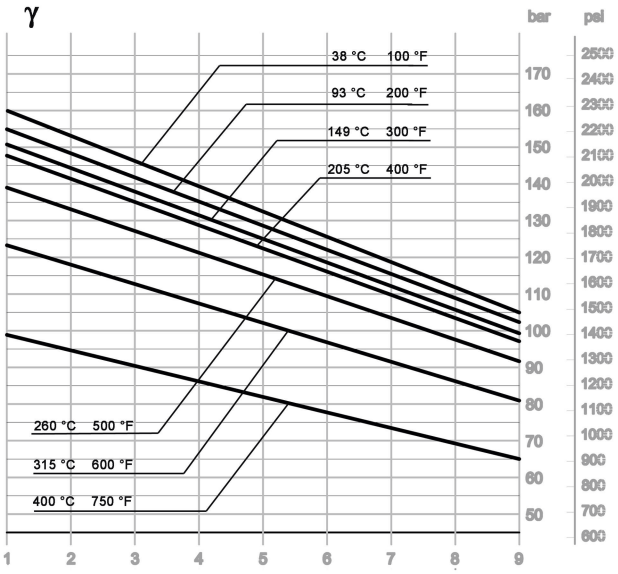

Size	Length of glass G	Length of body B	Visible length V	CC min. with GP11	CC min. with GP12	Weight kg	CC min. with G & GS 41 & 42	Weight kg
1	115	128	95	241	209	12,1	218	17,5
2	140	153	120	266	234	13,1	243	18,5
3	165	178	145	291	259	13,9	268	19,3
4	190	203	170	316	284	14,9	293	20,3
5	220	233	200	346	314	16,1	323	21,5
6	250	263	230	376	344	17,2	353	22,6
7	280	293	260	406	374	18,4	383	23,8
8	320	333	300	446	414	19,8	423	25,2
9	340	353	320	466	434	21,0	443	26,4
2x4	190	413	380	526	494	23,1	503	28,5
2x5	220	473	440	586	554	25,3	563	30,7
2x6	250	533	500	646	614	27,6	623	33,0
2x7	280	593	560	706	674	30,2	683	35,6
2x8	320	673	640	786	754	32,8	763	38,2
2x9	340	713	680	826	794	34,8	803	40,2
3x6	250	803	770	916	884	38,1	893	43,5
3x7	280	893	860	1006	974	41,7	983	47,1
3x8	320	1013	980	1126	1094	45,7	1103	51,1
3x9	340	1073	1040	1186	1154	49,3	1163	54,7
4x7	280	1193	1160	1306	1274	53,4	1283	58,8
4x8	320	1353	1320	1466	1434	58,7	1443	64,1
4x9	340	1433	1400	1546	1514	63,4	1523	68,8
5x7	280	1493	1460	1606	1574	65,1	1583	70,5
5x8	320	1693	1660	1806	1774	71,7	1783	77,1
5x9	340	1793	1760	1906	1874	77,6	1883	83,0
6x8	320	2033	2000	2146	2114	84,7	2123	90,1
6x9	340	2153	2120	2266	2234	91,7	2243	97,1
7x9	340	2513	2480	2626	2594	105,9	2603	111,3

1 Connections between gauge and valves are made
– for BT24-GP11, by end tubes and stuffing boxes
– for BT24-GP12, by NPT screwed nipples
– for BT24-G41/42 & GS41/42, by NPT screwed nipples.
Minimum CC distance, shown on table is referred to 1/2” NPT connections. On request 3/4” NPT connection can be supplied.

2 According to the position of the shut-off valves compared with the gauge body, the level gauge is named “right-handed” or “left-handed”. Fig. 844.1 shows a left-handed gauge. Each level gauge can be assembled right-handed or left-handed. Usually two level gauges (1 right and 1 left) are installed on steam vessels.

3 According to some Steam Boiler Regulations, the visible length of the level gauges installed on steam boilers must be not shorter than a fixed length. Therefore the suitability of the smaller sizes must be checked.

4 When ordering a level gauge please state:
– Centre to centre distance between connections (CC)
– Standard, Size and Finishing of connections
– Whether right-handed or left-handed.

5 Flanges are finished to customer prescriptions. Please state:
– Standard – Size
– Pressure class – Finishing
The inside passage through the gauge is 10 mm.

6 Instead of flanges, connections can be delivered with threaded ends. Standard is 3/4” NPT, union. Other Standard and size on request.

7 BT24 gauges are fitted with transparent glasses type B (see page 38).

8 Operating conditions and material schedules on pages 4 and 5. Graph below shows rating for size 9 and smaller, combined included.

9 Applicable optionals and bolting torques on pages 27, 36, 37.

10 Gauge bodies without valves can be supplied:
– end connected (threaded or flanged)
– side connected (threaded or flanged)
– back connected (threaded or flanged).
Please state connecting dimensions and Standard.

11 For level gauges type BT24-G41, BT24-G42, BT24-GS41, BT24-GS42, see page 30-31.

Transparent **BONETTI** Level Gauges type BT25 with GP12, G41/42 and GS41/42 valves

Fig. 845 **Type BT25-GP12**

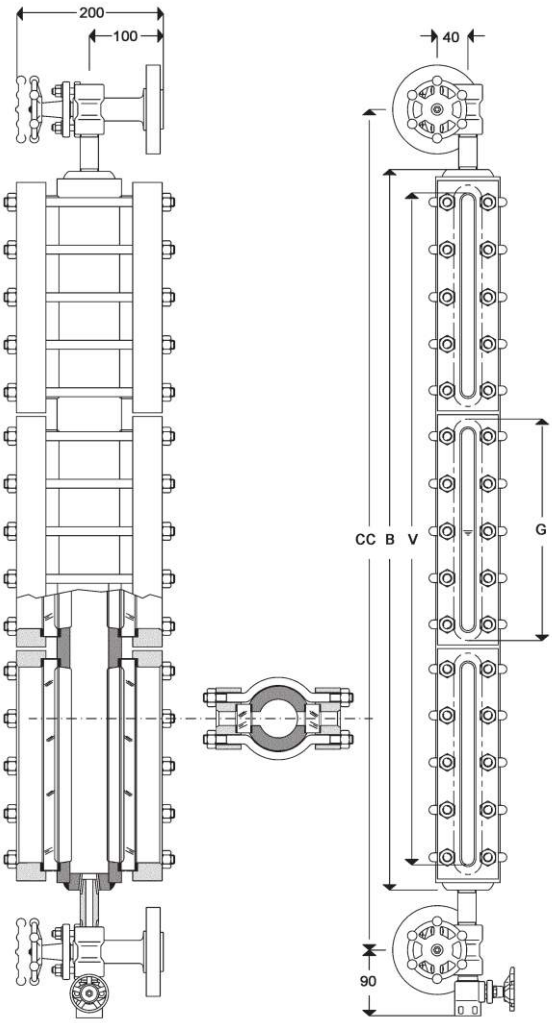

Size	Length of glass G	Length of body B	Visible length V	CC min. with GP12	Weight kg	CC min. with G & GS 41 & 42	Weight kg
1	115	158	95	239	16,9	248	22,3
2	140	183	120	264	18,4	273	23,8
3	165	208	145	289	19,9	298	25,3
4	190	233	170	314	21,3	323	26,7
5	220	263	200	344	23,1	353	28,5
6	250	293	230	374	24,9	383	30,3
7	280	323	260	404	26,6	413	32,0
8	320	363	300	444	29,0	453	34,4
9	340	383	320	464	30,1	473	35,5
2x4	190	443	380	524	33,4	533	38,8
2x5	220	503	440	584	36,9	593	42,3
2x6	250	563	500	644	40,4	653	45,8
2x7	280	623	560	704	44,0	713	49,4
2x8	320	703	640	784	48,7	793	54,1
2x9	340	743	680	824	51,0	833	56,4
3x6	250	833	770	914	56,0	923	61,4
3x7	280	923	860	1004	61,3	1013	66,7
3x8	320	1043	980	1124	68,4	1133	73,8
3x9	340	1103	1040	1184	72,0	1193	77,4
4x7	280	1223	1160	1304	78,7	1313	84,1
4x8	320	1383	1320	1464	88,1	1473	93,5
4x9	340	1463	1400	1544	92,8	1553	98,2
5x7	280	1523	1460	1604	96,0	1613	101,4
5x8	320	1723	1660	1804	107,8	1813	113,2
5x9	340	1823	1760	1904	113,7	1913	119,1
6x8	320	2063	2000	2144	127,5	2153	132,9
6x9	340	2183	2120	2264	134,6	2273	140,0
7x9	340	2543	2480	2624	155,5	2633	160,9

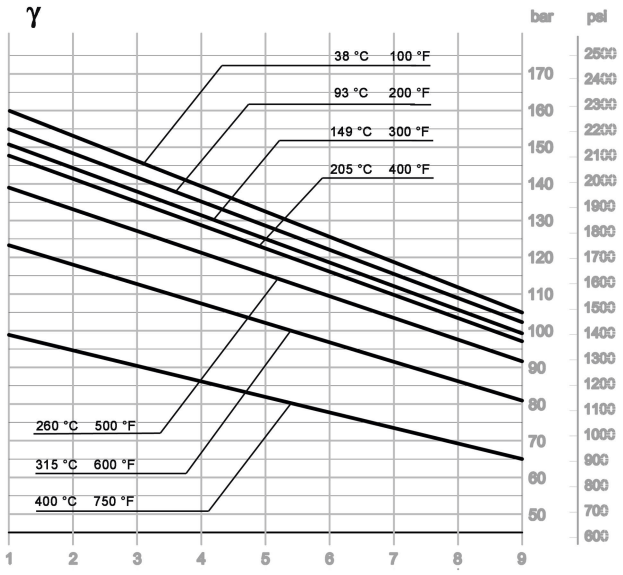

1 Type BT25-GP12 level gauge is LARGE CHAMBERED. The gauge body is machined from a tube having thick wall and internal Ø of about 40 mm. Large chamber level gauges should be used where the medium boils or surges.

2 Connections between gauge and valves are made by NPT screwed nipples. Minimum CC distance, shown on table is referred to 1/2" NPT connections. On request 3/4" NPT connection can be supplied.

03 According to the position of the shut-off valves compared with the gauge body, the level gauge is named "right-handed" or "left-handed". Fig. 845 shows a left-handed gauge. Each level gauge can be assembled right-handed or left-handed.

4 When large chamber body is required with butt-welding end caps, length of body (B) and minimum C. to C. (CC min) have to be increased of 40 mm.

5 When ordering a level gauge please state:
– Centre to centre distance between connections (CC)
– Standard, Size and Finishing of connections
– Whether right-handed or left-handed.

6 Flanges are finished to customer prescriptions. Please state:
– Standard – Size
– Pressure class – Finishing
The inside passage through the gauge is 40 mm.

7 Instead of flanges, connections can be delivered with threaded ends. Standard is 3/4" NPT, union. Other Standard and size on request.

8 BT25 gauges are fitted with transparent glasses type B (see page 38).

9 Operating conditions and material schedules on pages 4 and 5. Graph below shows rating for size 9 and smaller, combined included.

10 Applicable optionals and bolting torques on pages 27, 36, 37.

11 Gauge bodies without valves can be supplied:
– end connected (threaded or flanged)
– side connected (threaded or flanged)
– back connected (threaded or flanged).
Please state connecting dimensions and Standard.

12 For level gauges type BT25-G41, BT25-G42, BT25-GS41, BT25-GS42, see page 30-31.

Transparent **BONETTI** Level Gauges type BT28 with GP11, GP12, G41/42 and GS41/42 valves

Fig. 846 **Type BT28-GP11**

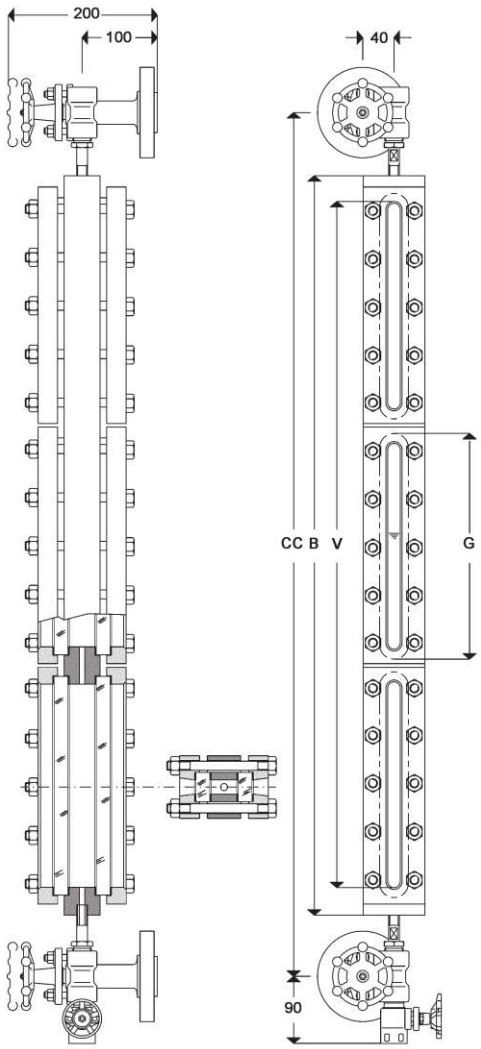

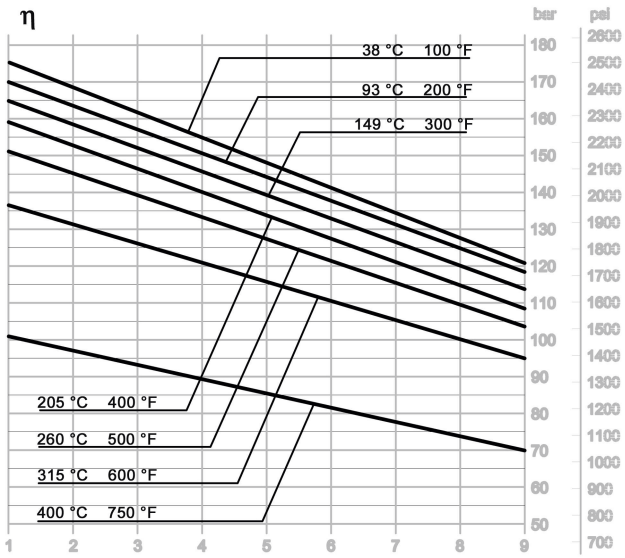

Size	Length of glass G	Length of body B	Visible length V	CC min. with GP11	CC min. with GP12	Weight kg	CC min. with G & GS 41 & 42	Weight kg
1	115	165	95	278	246	17,1	255	22,5
2	140	190	120	303	271	18,8	280	24,2
3	165	215	145	328	296	20,5	305	25,9
4	190	240	170	353	321	22,0	330	27,4
5	220	270	200	383	351	24,1	360	29,5
6	250	300	230	413	381	26,3	390	31,7
7	280	330	260	443	411	28,3	420	33,7
8	320	370	300	483	451	31,0	460	36,4
9	340	390	320	503	471	32,3	480	37,7
2x4	190	450	380	563	531	34,5	540	39,9
2x5	220	510	440	623	591	38,7	600	44,1
2x6	250	570	500	683	651	43,1	660	48,5
2x7	280	630	560	743	711	47,1	720	52,5
2x8	320	710	640	823	791	52,5	800	57,9
2x9	340	750	680	863	831	55,1	840	60,5
3x6	250	840	770	953	921	59,9	930	65,3
3x7	280	930	860	1043	1011	65,9	1020	71,3
3x8	320	1050	980	1163	1131	74,0	1140	79,4
3x9	340	1110	1040	1223	1191	77,9	1200	83,3
4x7	280	1230	1160	1343	1311	84,7	1320	90,1
4x8	320	1390	1320	1503	1471	95,5	1480	100,9
4x9	340	1470	1400	1583	1551	100,7	1560	106,1
5x7	280	1530	1460	1643	1611	103,5	1620	108,9
5x8	320	1730	1660	1843	1811	117,0	1820	122,4
5x9	340	1830	1760	1943	1911	123,5	1920	128,9
6x8	320	2070	2000	2183	2151	138,5	2160	143,9
6x9	340	2190	2120	2303	2271	146,3	2280	151,7
7x9	340	2550	2480	2663	2631	169,1	2640	174,5

1 Connections between gauge and valves are made
– for BT28-GP11, by end tubes and stuffing boxes
– for BT28-GP12, by NPT screwed nipples
– for BT28-G41/42 & GS41/42, by NPT screwed nipples.
Gauge/valve standard NPT connection is 1/2”. On request 3/4” NPT connection can be supplied.

2 According to the position of the shut-off valves compared with the gauge body, the level gauge is named “right-handed” or “left-handed”. Fig. 846 shows a left-handed gauge. Each level gauge can be assembled right-handed or left-handed. Usually two level gauges (1 right and 1 left) are installed on steam vessels.

3 According to some Steam Boiler Regulations, the visible length of the level gauges installed on steam boilers must be not shorter than a fixed length. Therefore the suitability of the smaller sizes must be checked.

4 When ordering a level gauge please state:
– Centre to centre distance between connections (CC)
– Standard, Size and Finishing of connections
– Whether right-handed or left-handed.

5 Flanges are finished to customer prescriptions. Please state:
– Standard – Size
– Pressure class – Finishing
The inside passage through the gauge is 10 mm.

6 Instead of flanges, connections can be delivered with threaded ends. Standard is 3/4” NPT, union. Other Standard and size on request.

7 BT28 gauges are fitted with transparent glasses type B (see page 38).

8 Operating conditions and material schedules on pages 4 and 5. Graph below shows rating for size 9 and smaller, combined included.

9 Applicable optionals and bolting torques on pages 27, 36, 37.

10 Gauge bodies without valves can be supplied:
– end connected (threaded or flanged)
– side connected (threaded or flanged)
– back connected (threaded or flanged).
Please state connecting dimensions and Standard.

11 For level gauges type BT28-G41, BT28-G42, BT28-GS41, BT28-GS42, see page 30-31.

12 The BT28 gauge body can be fitted with set of valves G42: this level gauge is called type BT28-G42 and is suitable for water steam up to 50 bar and 263 °C.

Transparent **BONETTI** Level Gauges type BT29 with GP12, G41/42 and GS 41/42 valves

Fig. 868 **Type BT29-G41**

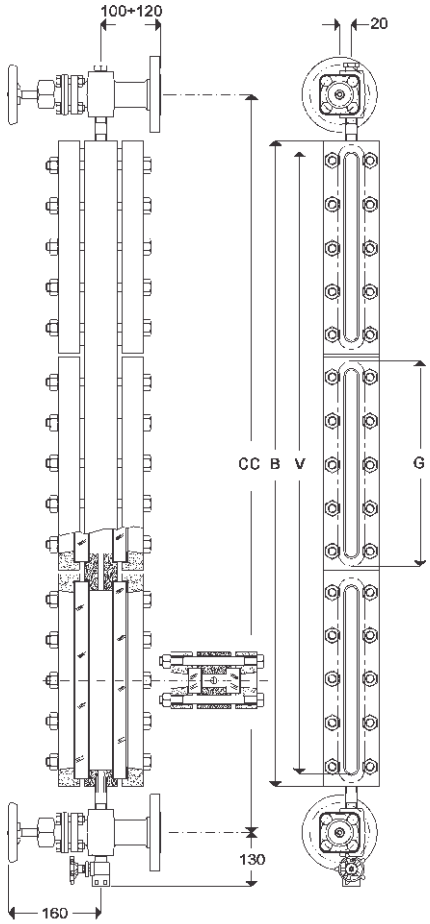

Size	Length of glass G	Length of body B	Visible length V	CC min. with GP12	Weight kg	CC min. with G & GS 41 & 42	Weight kg
1	115	165	95	246	17,1	255	22,5
2	140	190	120	271	18,8	280	24,2
3	165	215	145	296	20,5	305	25,9
4	190	240	170	321	22,0	330	27,4
5	220	270	200	351	24,1	360	29,5
6	250	300	230	381	26,3	390	31,7
7	280	330	260	411	28,3	420	33,7
8	320	370	300	451	31,0	460	36,4
9	340	390	320	471	32,3	480	37,7
2x4	190	450	380	531	34,5	540	39,9
2x5	220	510	440	591	38,7	600	44,1
2x6	250	570	500	651	43,1	660	48,5
2x7	280	630	560	711	47,1	720	52,5
2x8	320	710	640	791	52,5	800	57,9
2x9	340	750	680	831	55,1	840	60,5
3x6	250	840	770	921	59,9	930	65,3
3x7	280	930	860	1011	65,9	1020	71,3
3x8	320	1050	980	1131	74,0	1140	79,4
3x9	340	1110	1040	1191	77,9	1200	83,3
4x7	280	1230	1160	1311	84,7	1320	90,1
4x8	320	1390	1320	1471	95,5	1480	100,9
4x9	340	1470	1400	1551	100,7	1560	106,1
5x7	280	1530	1460	1611	103,5	1620	108,9
5x8	320	1730	1660	1811	117,0	1820	122,4
5x9	340	1830	1760	1911	123,5	1920	128,9
6x8	320	2070	2000	2151	138,5	2160	143,9
6x9	340	2190	2120	2271	146,3	2280	151,7
7x9	340	2550	2480	2631	169,1	2640	174,5

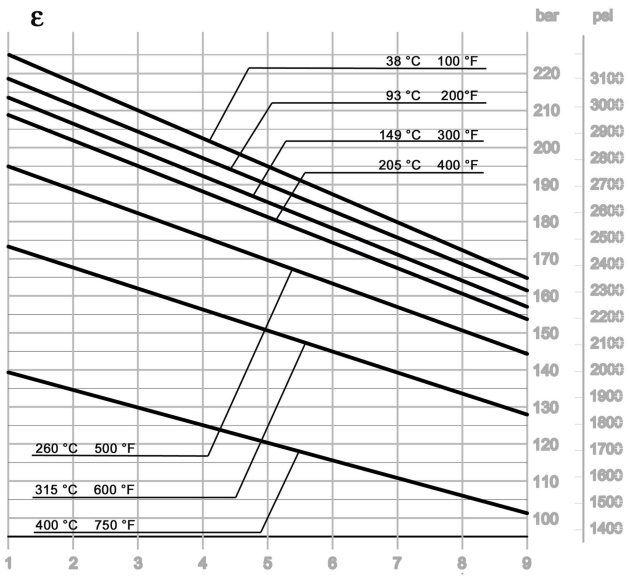

1 Connections between gauge and valves are made
– for BT29-GP12, by NPT screwed nipples
– for BT29-G41/42 & GS41/42, by NPT screwed nipples.
Gauge/valve standard NPT connection is 1/2”.
On request 3/4” NPT connection can be supplied.

2 According to the position of the shut-off valves compared with the gauge body, the level gauge is named “right-handed” or “left-handed”. Fig. 868 shows a left-handed gauge.

3 When ordering a level gauge please state:
– Centre to centre distance between connections (CC)
– Standard, Size and Finishing of connections
– Whether right-handed or left-handed.

4 Flanges are finished to customer prescriptions. Please state:
– Standard – Size
– Pressure class – Finishing
The inside passage through the gauge is 10 mm.

5 Instead of flanges, connections can be delivered with threaded ends. Standard is 3/4” NPT, union. Other Standard and size on request.

6 BT29 gauges are fitted with transparent glasses type B (see page 38).

7 Operating conditions and material schedules on pages 4 and 5. Graph below shows rating for size 9 and smaller, combined included.

8 Applicable optionals and bolting torques on pages 27, 36, 37.

9 Gauge bodies without valves can be supplied:
– end connected (threaded or flanged)
– side connected (threaded or flanged)
– back connected (threaded or flanged).
Ple se state connecting dimensions and Standard.

10 For level gauges type BT29-G41, BT29-GS41, BT29-G42, BT29 GS42, see page 30-31.

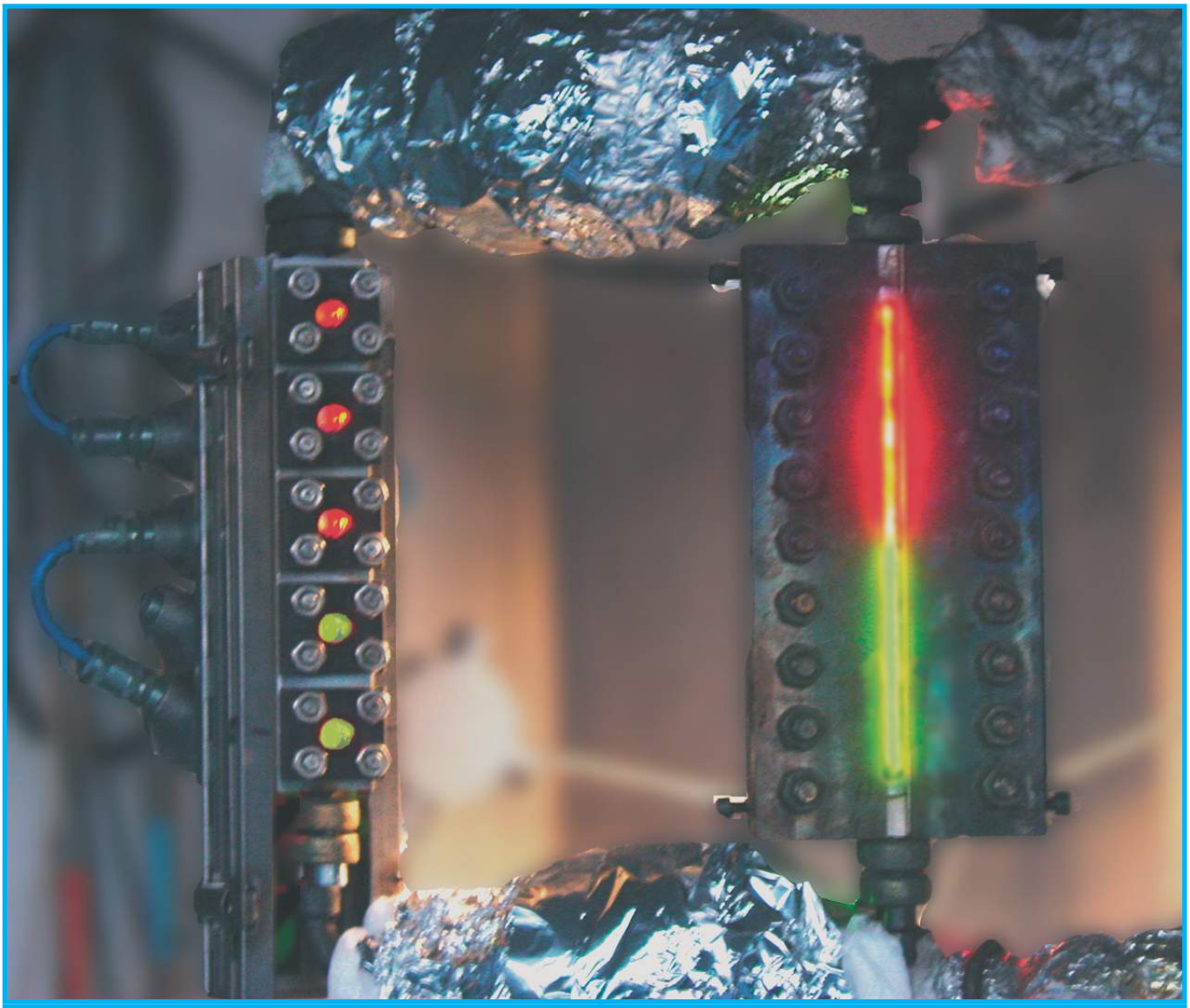

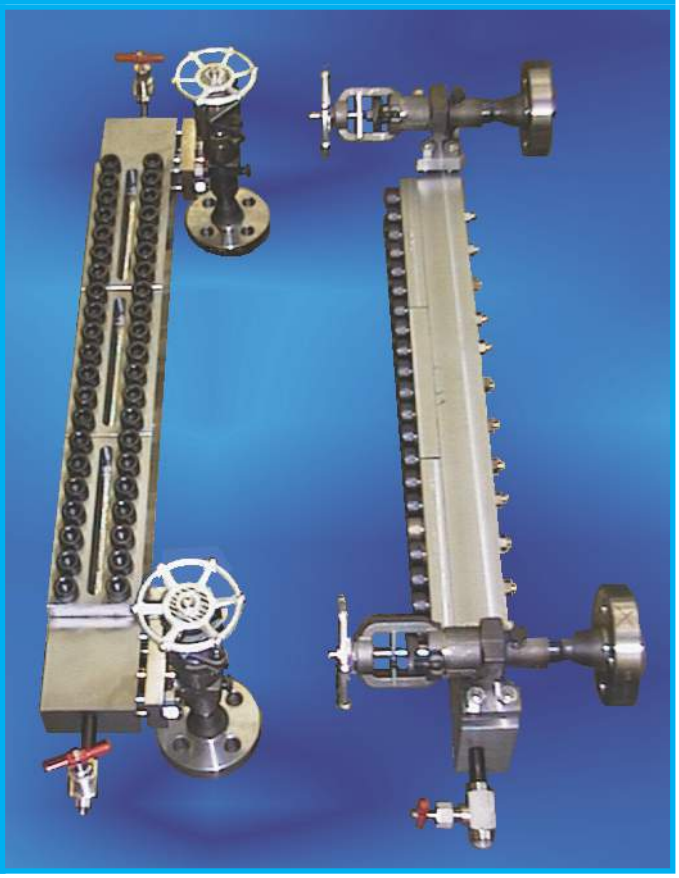

Transparent **BONETTI** Level Gauges type BT33 with G52 valves

Fig. 858 **Type BT33-G52**

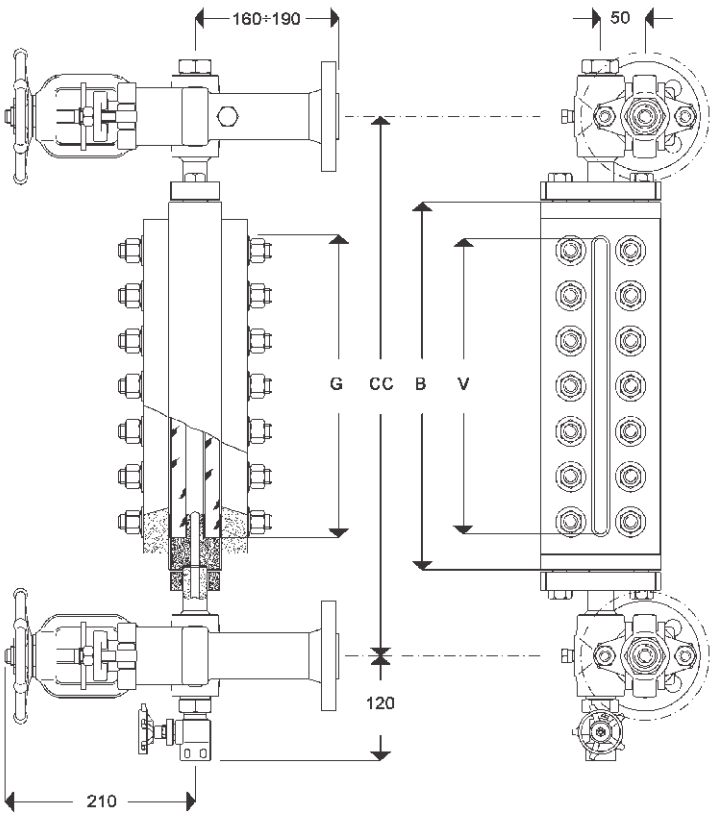

Size	Length of glass G	Length of body B	Visible length V	CC min. length	Weight
3	165	225	145	387	41,1
4	190	250	170	412	43,4
5	220	280	200	442	46,3
6	250	310	230	472	49,1
7	280	340	260	502	51,9
8	320	380	300	542	55,6
9	340	400	320	562	57,5
2x4	190	457	377	619	62,9
2x5	220	517	437	679	68,5
2x6	250	577	497	739	74,1
2x7	280	637	557	799	79,7
2x8	320	717	637	879	87,2
2x9	340	757	677	919	91,0
3x6	250	844	764	1006	99,2
3x7	280	934	854	1096	107,6
3x8	320	1054	974	1216	118,9
3x9	340	1114	1034	1276	124,5
4x7	280	1231	1151	1393	135,5
4x8	320	1391	1311	1553	150,5
4x9	340	1471	1391	1633	158,0
5x7	280	1528	1448	1690	163,3
5x8	320	1728	1648	1890	182,1
5x9	340	1828	1748	1990	191,5
6x8	320	2065	1985	2227	213,7
6x9	340	2185	2105	2347	224,9
7x9	340	2542	2462	2704	258,4

1 Connections between gauge and valves are made by flanges and bolts. Provided valves are closed, gauge body can be easily rotated on its axis even with boiler under steam in order to adjust easy reading from control floor.

2 According to the right or left position of the stop valves handle on the gauge body, the level gauges are named right-handed or left-handed. Fig. 858 shows a right-handed level gauge Usually two level gauges (1 right and 1 left) are installed on steam vessels.

3 According to some Steam Boiler Regulations, the visible length of the level gauges installed on steam boilers must be not shorter than a fixed length. Therefore the suitability of the smaller sizes must be checked.

4 For visible length over 320 mm we manufacture combined level gauges having two or more gauge bodies on common centre piece. Side gauge for by-passing blind distance is recommended (see Fig. 820, page 36).

5 When ordering a level gauge please state:
– Centre to centre distance between connections (CC)
– Standard, Size and Finishing of connections
– Whether right-handed or left-handed.

6 Flanges are finished to customer prescriptions. Please state:
– Standard – Size
– Pressure class – Finishing
The inside passage through the gauge is at least 12.5 mm.

7 Instead of flanges, connections can be delivered with welding ends (Socket welding or Butt welding). Please state connecting dimensions, size and Standard.

8 BT33 gauges are fitted with transparent glasses type B (see page 38).

9 Operating conditions and material schedules on pages 4 and 5.

10 Applicable optionals and bolting torques on pages 27, 36, 37.

11 Gauge bodies without valves can be supplied:
– end connected (threaded or flanged)
– side connected (threaded or flanged)
– back connected (threaded or flanged).
Please state connecting dimensions and Standard.

12 **This level gauge is in compliance with ASME Boiler - Section I – requirements**

Transparent **BONETTI** Level Gauges type BT32 wit G52 valves

Fig. 859 **Type BT32-G52**

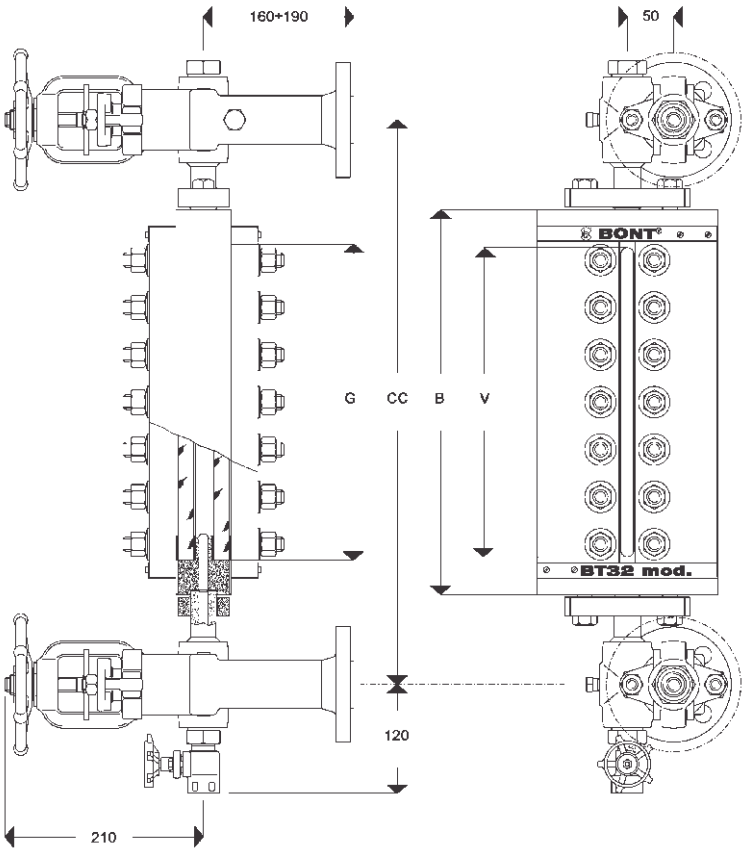

Size	Length of glass G	Length of body B	Visible length V	CC min. length	Weight
3	165	225	145	387	51,7
4	190	250	170	412	55,2
5	220	280	200	442	59,4
6	250	310	230	472	63,6
7	280	340	260	502	67,8
8	320	380	300	542	73,5
9	340	400	320	562	76,3
2x4	190	497	417	659	89,9
2x5	220	557	477	719	98,4
2x6	250	617	537	779	106,8
2x7	280	677	597	839	115,2
2x8	320	757	677	919	126,5
2x9	340	797	717	959	132,1
3x6	250	924	844	1086	150,0
3x7	280	1014	934	1176	162,7
3x8	320	1134	1054	1296	179,5
3x9	340	1194	1114	1356	188,0
4x7	280	1351	1271	1513	210,1
4x8	320	1511	1431	1673	232,6
4x9	340	1591	1511	1753	243,8
5x7	280	1688	1608	1850	257,5
5x8	320	1888	1808	2050	285,6
5x9	340	1988	1908	2150	299,7
6x8	320	2265	2185	2427	338,7
6x9	340	2385	2305	2547	355,5
7x9	340	2782	2702	2944	411,4

1 Connections between gauge and valves are made by flanges and bolts. Provided valves are closed, gauge body can be easily rotated on its axis even with boiler under steam in order to adjust easy reading from control floor.

2 According to the right or left position of the stop valves handle on the gauge body, the level gauges are named right-handed or left-handed. Fig. 859 shows a right-handed level gauge Usually two level gauges (1 right and 1 left) are installed on steam vessels.

3 According to some Steam Boiler Regulations, the visible length of the level gauges installed on steam boilers must be not shorter than a fixed length. Therefore the suitability of the smaller sizes must be checked.

4 For visible length over 315 mm we manufacture combined level gauges having two or more gauge bodies on common centre piece. Side gauge for by-passing blind distance is recommended (see Fig. 820, page 36).

5 When ordering a level gauge please state:
– Centre to centre distance between connections (CC)
– Standard, Size and Finishing of connections
– Whether right-handed or left-handed.

6 Flanges are finished to customer prescriptions. Please state:
– Standard – Size
– Pressure class– Finishing
The inside passage through the gauge is at least 12.5 mm.

7 Instead of flanges, connections to the vessel can be delivered with welding ends (Socket welding or Butt welding). Please state connecting dimensions, size and Standard.

8 BT32 gauges are fitted with transparent glasses type B (see page 38).

9 Operating conditions and material schedules on pages 4 and 5.

10 Applicable optionals and bolting torques on pages 27, 36, 37.

11 Gauge bodies without valves can be supplied:
– end connected (threaded or flanged)
– side connected (threaded or flanged)
– back connected (threaded or flanged).
Please state connecting dimensions and Standard.

12 **This level gauge is in compliance with ASME Boiler - Section I – requirements**

Bicolour **BONETTI** Level Gauges type BC24, BC28, BC33, BC32

Fig. 824.2 **Type BC24 - BC28**

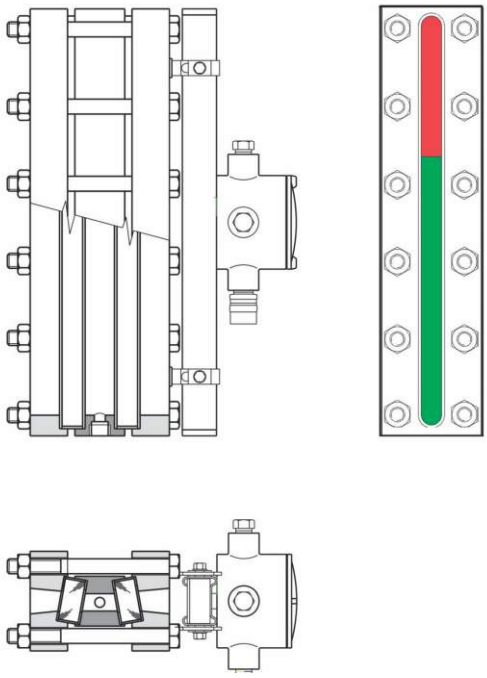

Fig. 825.1 **Type BC33**

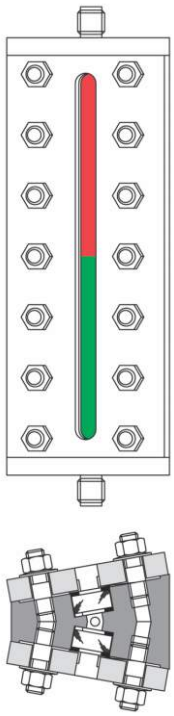

Fig. 825.2 **Type BC32**

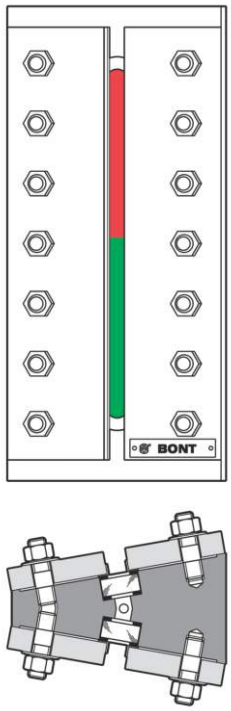

Design and working principle

BONETTI bicolour level gauges are made of:

- 1 metallic centre piece containing steam and water of which level is to be measured;
- 1 or more flat transparent glasses (long or circular) on the front face of the gauges;
- an equal number of identical glasses on the back face of the gauge;
- 1 or more front covers and an equal number of back covers holding the glass assemblies against the centre piece;
- 1 illuminator case containing LED lamps of two colour (normally green and red);
- 1 set of shut-off valves for connection to boiler or tank.

The bicolour level gauge has a trapezoidal body and consequently the front and the back glasses are non-parallel.
They form a small angle. This special assembly and the different index of refraction of water and steam allows that the red and the green light of the illuminator entering the gauge passes through the gauge itself and is seen by the observer as follows:

- **RED** in correspondence of **STEAM**
- **GREEN** in correspondence of **WATER.**

Application

Bicolour level gauges are manufactured by our Company since more than 70 years. At the beginning only port-hole level gauges were produced (that is with small circular glasses) suitable for high pressure water/steam, up to 225 bar (see BONETTI level gauges type BC1-G55). For these severe conditions the small circular glasses are absolutely necessary and cannot be substituted by other types of glasses.
In the recent year bicolour gauges have been very much appreciated because of the brilliant and sure reading they give and therefore they are more and more requested for low and medium pressure water/steam also, for which long glasses can safely be used.
In case of combined level gauges, with the bicolour reading it is not necessary to use side bodies for the uninterrupted visibility, allowing a simplification of the instrument.

For the same operating conditions, we produce both transparent and bicolour level gauges, (see Fig. 824, 825.1 and 825.2).

Dimensions (Body length, C to C Distance according to the different type of valve sets, etc.), Description and Maintenance Instructions of the Bicolour Level Gauges are identical to those of the corresponding Transparent Level Gauge.

Level Gauge Type		Max. Operating Contidions		Fluid
Bicolour	Transparent	Pressure bar	Temperature °C	
	Fig. 844			
BC24-GP11	BT24-GP11	20	211	Water steam
	BT24-GP11	105 62	38 300 (*)	Other fluids
	Fig. 846			
BC28-GP11	BT28-GP11	40	249	Water steam
	BT24-GP11	120 80	38 300 (*)	Other fluids
	Fig. 858			
BC33-G52	BT33-G52	90	302	Water steam
	Fig. 859			
BC32-G52	BT32-G52	103	313	Water steam
(*) NOTE:	**Maximum allowable temperature according to DIN 7081 / 1999-05. For operating condition with temperature over 300 °C, please apply to our Sales or Technical department.**			

Bicolour **BONETTI** Level Gauges type BC1with G55 valves

Fig. 860 **Type BC1-G55**

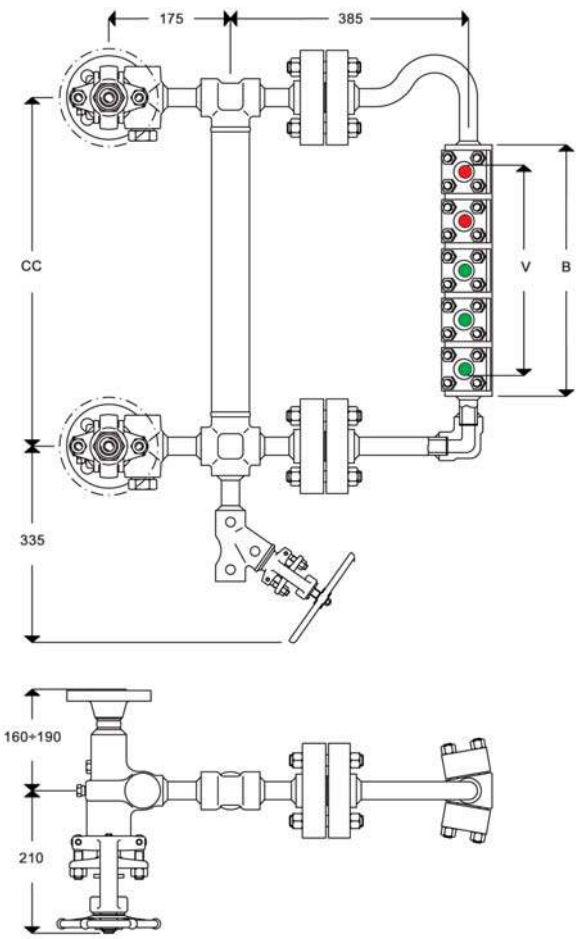

1 According to the right or left position of the handwheel of the stop valves on the gauge body, the level gauges are named right-handed or left-handed. Fig. 860 shows a left-handed level gauge. Usually two level gauges (1 right and 1 left) are installed on steam vessel.

2 This level gauge consists of one gauge type BC1, and one set of valves type G55. It MUST be installed with the gauge body in vertical position. G55 set is connected to a vertical pipe, which links upper and bottom gauge parts. It avoid condensate to flow through gauge body therefore granting better visibility and longer life of glasses. Gauge body is connected to pipe/valve assembly through two flanges and can be easily removed for inspection and service.

3 This gauge consists of a central body type BC1 and a certain number of covers attached to the front and the back of the body: the covers contain small circular glasses. Central body is manufactured of stainless steel for a longer life of the whole instrument. The illuminator is fitted and has bicolour LED lamps, half red and half green. The illumination of the gauge is based on the difference of refractive indexes of steam and water. The light source projects its rays through the adjacent coloured filter and in the steam and water spaces these coloured light rays are refracted to a different degree depending upon the refractive index of the medium. This permits only one colour of light to emerge from each medium, the other being absorbed in the wall of the gauge.

Size	Number of port-holes	C. to C. distance CC min	Length of body B	Visible length V	Weight kg
5	5	472	372	311	094
6	6	545	445	384	100
7	7	618	518	457	107
8	8	691	591	530	113
9	9	764	664	603	119
10	10	837	737	676	126
11	11	910	810	749	132
Longer or shorter visible length can be suppliede on request					

In particular the circular glasses appear:
- **RED** in correspondence of **STEAM**
- **GREEN** in correspondence of **WATER**

The level can be:
- read by observer standing directly IN FRONT of the level gauge, at the same height of body,

or it can be outfitted with:
- special "periscope" mirrors able to transmit the signal to the control station by means of a simple periscopic arrangement with mirrors. The mirrors (both top and bottom) adjustable to assist alignment,
- closed TV circuit, also transmitting a 4¸20 mA signal
- "Red Cherry" optics-fiber system: this system can transmit the red and green light signal to the control station by means of fiber-optic remote viewing device.

Ask for peculiar bulletin. Needs of each plant should be known before stating supplying

4 The standard illuminator is explosion-proof and consists of a stainless steel box containing red and green LED lamps, is suitable for the number of port holes and is suitable for 110-240 V AC @ 50/60Hz or 18-36 V DC power supply. The illuminator is slotted so as to fit into the level gauge centre piece. The red line of LED lamps must be placed in correspondence of the narrow side of the gauge body; the green line on the wide side. In this way the view of red steam and green water will be produced. We recommend to use only original BONETTI illuminator as spare.

5 We manufacture BC1 gauges with adequate number of port holes on one single centre piece. Shorter or longer visible length than those listed in the table can be supplied on request.

6 Centre to centre distance (CC) shown on table are referred to bodies with holes having standard pitch of 73 mm. To meet special visibility request, different pitch length can be supplied.

7 When ordering a level gauge please state:
- Centre to centre distance between connections (CC)
- Standard, Size and Finishing of connections
- Whether right-handed or left-handed.

8 Flanges are finished to customer prescriptions. Please state:
- Standard
- Size
- Pressure class
- Finishing

The inside passage through the gauge is at least 12,5 mm.

9 Instead of flanges, connections can be delivered with welding ends (Socket welding or Butt welding). Please state connecting dimensions, size and Standard.

10 BC1 gauges are fitted with transparent glass discs (Dia. 31,6 x 12,7 mm). Dimensions of joints and mica and Maintenance Instructions on request.

11 Operating conditions and material schedules on pages 4 and 5.

12 Applicable optionals and bolting torques on pages. 27 and 37.

13 Gauge bodies without valves can be supplied:
– end connected (threaded or flanged)
– side connected (threaded or flanged)
– back connected (threaded or flanged).
Please state connecting dimensions and Standard.

14 **This level gauge is in compliance with ASME Boiler - Section I – requirements**

Transparent **BONETTI** Level Gauges Weld - on Bodies, type BT26 and BT27

Fig. 734 **Type BT26**

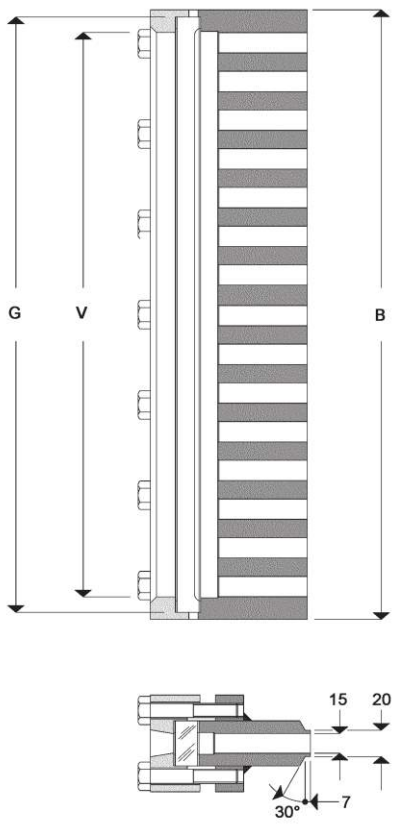

Fig. 822 **Type BT27**

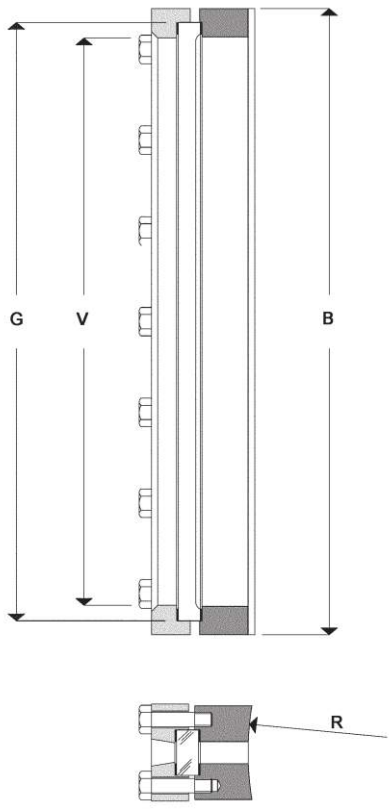

Size	Length of glass	Length of body	Visible length	Weight	
				BT26	BT27
	G	B	V	kg	kg
1	115	128	95	4.8	3.6
2	140	153	120	5.7	4.3
3	165	178	145	6.6	5.0
4	190	203	170	7.5	5.7
5	220	233	200	8.6	6.6
6	250	263	230	9.8	7.5
7	280	293	260	10.9	8.3
8	320	333	300	12.4	9.4
9	340	353	320	13.1	10.0

1 These gauge bodies are suitable for welding directly on the vessel. Therefore, no valves can be fitted between vessel and gauge, and in case of glass breakage, the fluid flowing from the vessel cannot be stopped.

2 It is necessary to control the suitability of the vessel wall, on which the gauge body is to be welded as this must not be excessively weakened by the holes or communicating window with the gauge. Steel plates to strengthen the vessel wall should be used whenever this is possible.

3 During the welding operation, be careful to not expose the gauge body for long time to high temperatures, as this might damage the flatness of the glass sealing surface.

4 For BT26 the connecting lip is provided to facilitate the welding operation.

5 When enquiring or ordering BT27 please state the external radius (R) of the vessel on which the gauge must be welded.

6 For visible lengths over 320 mm two or more single gauge bodies will have to be welded on the vessel. In this case it is advisable to fit the gauge bodies not along the same vertical line, but offset.

7 BT26 and BT27 are fitted with transparent glasses type B (see page 38).

8 Operating conditions and material schedules on pages 4 and 5.

9 Applicable optionals and bolting torques on pages 36, 37.

BONETTI Level Gauges Optionals for Sets of Valves

Fig. 865

Set		Valve				Plug		Top and bottom ball-check	Operated by				Heating	
Type	Fig.	top	bottom	drain	vent	drain	vent		handwheel	chain handwheel	double lever	weighted lever	external	internal
G11	737	S	S	S	A	A	A	A	S	NA	A	NA	A	NA
G12	738	S	S	S	A	A	A	A	S	NA	A	NA	A	NA
GP11	831	S	S	S	A	A	A	A	S	NA	NA	NA	A	NA
GP12	832	S	S	S	A	A	S	A	S	NA	NA	NA	A	NA
G41	747	S	S	A	A	A	A	S	S	NA	A	A	A	A
G42	748	S	S	A	A	A	A	S	S	A	A	A	A	A
GS41	854	S	S	A	A	A	A	S	S	NA	A	A	A	NA
GS42	855	S	S	A	A	A	A	S	S	A	A	A	A	NA
G51	861	S	S	S	A	NR	NR	A	S	A	NA	NA	A	NA
G52	862	S	S	S	A	NR	NR	A	S	A	NA	NA	A	NA
G55	863	S	S	S	A	NR	NR	A	S	A	NA	NA	A	NA

Keys and Remarks to Fig. 865
S – Standard Equipment
NA – Not applicable
A – Applicable
NR – Possible, but not recommended

1 We mean by Set the assembly of two valves (1 top and 1 bottom) for the connection of the gauge body to the vessel. The set stops fluid between vessel and level gauge in case of servicing.

2 This bulletin shows steel level gauges only; the sets fitted on the level gauges include the following patterns:
- type **G11** & **G12**, top and bottom: sleeve packed cocks; (see page 27)
- type **GP11** & **GP12**, top and bottom: piston valves; (see pages 28 and 29)
- type **G41** & **G42**, "Offset" metallic seating valves, with stainless steel screwed-in seat and stainless steel disk (see pages 30 and 31).
- type **GS41** and **GS42**, "Straight" metallic seating valves, with stainless steel screwed-in seat and stainless steel disk (see pages 30 and 31). type G51, G52, G55, metallic seating valves, with Stellite faced trim (see pages 32 and 33).

3 Each set is usually supplied with or without some optionals according to its original design and its main application.

4 EXTERNAL HEATING has electrical or steam tracing, installed on job site. By INTERNAL HEATING gauge body is inside traced for heating fluid.

5 All sets can be supplied with INTERMEDIATE SUPPORT fitted on the vessel in the middle between top and bottom valve in case of very large C. to C. distance. Intermediate support usually clamps the gauge bodies only and is not in connection with the vessel inside.

6 Optionals for gauge bodies on pages 36 and 37.

BONETTI Gauge Valves

Offset Valves type G11 and G12 suitable for ASME 300 and PN 40 (type G11) suitable for ASME 900 and PN 160 (type G12)

General information

These are the classical cocks for level gauges having a cylindrical plug with soft tightening packing sleeve.
The advantages of this design are:
- circular through flow passage;
- very long life of body and plug, since the elastic packing sleeve is interposed between this two pieces;
- no sensitivity to changes of temperature;
- no possible plug seizure;
- best performance at high temperature;
- possibility to restore tightness during service by compressing packing sleeve;
- complete interchangeability of worn pieces.

Fig. 737-738 **Type G11/G12**

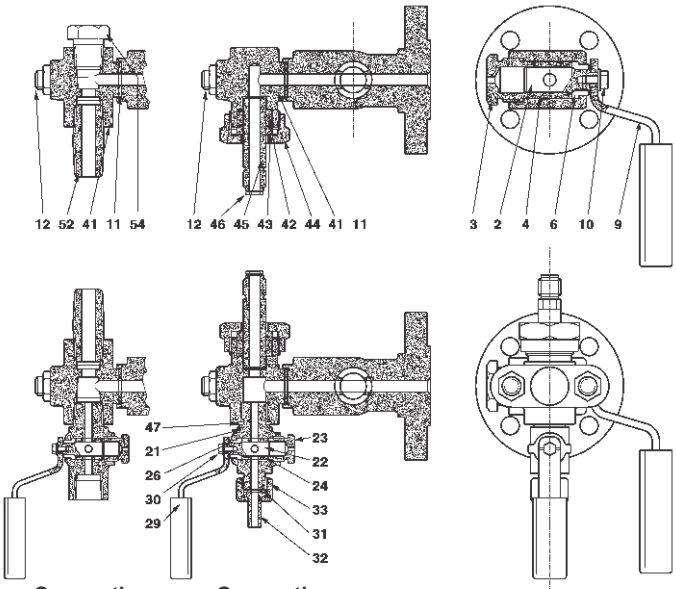

Connection Type G12 **Connection Type G11**

These set are suitable for:
- type G11 (connection to gauge by stuffing box) Fig. 737; ASME Class 300 and PN 40
- type G12 (connection to gauge by screwed nipples) Fig. 738 ASME Class 900 and PN 160

Handles and plug are made so that each handle face downward when the gauge is in service, that is when shut-off (top and bottom) are open and drain cock is closed.
According to the right or the left position of the shut-off cocks handle, the set (and therefore the level gauge) is named right handed or left handed.

Centre to Centre distance

When these sets of cocks are chosen for the level gauge, the value of the minimum vessel C. to C. distance is given from the formula:
- type G11: min. C. to C. = Length of body + 101 mm (CC min. = B + 101 mm); exceptionally CC min = B + 92 mm
- type G12: min. C. to C. with 1/2" NPT nipples = Length of body + 50 mm (CC min = B + 50 mm)

Optionals

- Double ended handle for chain operating;
- Automatic safety ball check with removal device for bottom ball

Please apply to our sales organisation for more details and technical Information.

Top and bottom cock		Drain cock			
1	Body	21	Body	41	Connecting head
2	Plug	22	Plug	42	P16 packing ring
3	Tightening nut	23	Tightening nut	43	Stuffing box ring (16/23, 5/10)
4	Packing sleeve with 2 eyelets, type M2.2	24	Packing sleeve with 2 eyelets, type M1.2	44	Stuffing box nut
6	Ring	26	Ring	45	End tube
9	Handle*	29	Handle*	46	Tube joint ring
10	Screw and washer*	30	Screw and washer*	47	Drain joint ring
11	Head joint	31	Tailpipe joint	52	NPT nipple
12	Stud and nut	32	Tailpipe	54	NPT plug
		33	Union nut		

* Items No. 9, 10, 29 and 30 are in Carbon steel also for Material Schedule 63

Offset Valves type GP11 and GP12 suitable for ASME 300 and PN 40 (type GP11) ASME 900 and PN 160 (type GP12)

Fig. 831 **Type GP11**

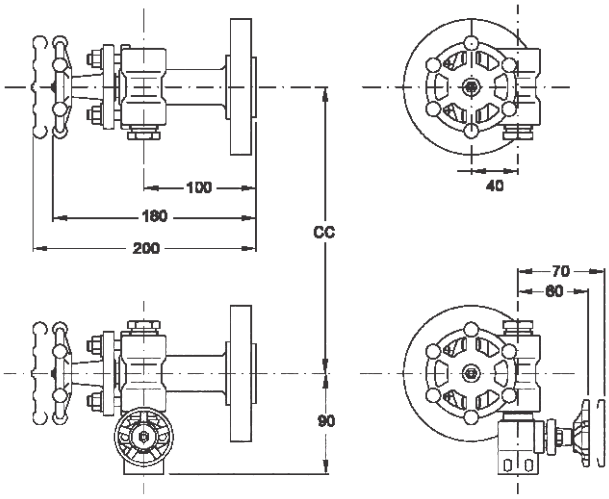

Fig. 832 **Type GP12**

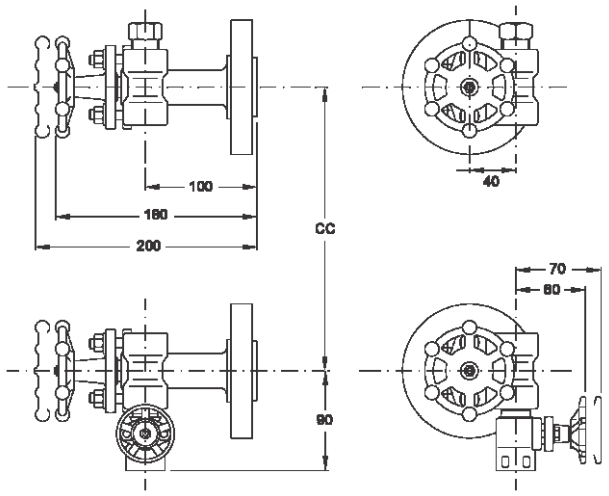

General information

General information
These sets of valves consist usually of:
– 2 shut-off valves (1 top and 1 bottom)
– 1 drain valve.

The advantages of this design are:
– excellent performance of Piston Valves, qualified according to:
– API 6 FA and BS 6775: Fire Safe
– TA Luft: German Clean Air, TÜV Mannheim
– Druckbehälterverordnung § 22: for railway and road tankers down to –40°C, TÜV München
– easy servicing
– easy dismantling of the gauge body, to facilitate replacement of the glass.

These sets are suitable for:
– type **GP11** (Fig. 831): connection to gauge body by stuffing box **ASME class 300 and PN 40**
– type **GP12** (Fig. 832): connection to gauge body by screwed nipples - **ASME class 900 and PN 160**
Maximum service temperature: 425°C (797°F).

According to the position of the shut-off valves compared with the gauge body, the Set of valves (and therefore the level gauge) is named “right-handed” or “left-handed”.
Fig. 831 shows a left-handed gauge. Each level gauge can be assembled right-handed or left-handed

Connection to the vessel

Can be:
– flanged to customer requirements.
Please state:
– Standard – Size
– Pressure class – Finishing
The flanges are integral with the body.
Different sizes and finishing of flanges can be obtained according to the most used international Standards (ASME, AFNOR, BS, DIN, GOST, UNI, etc.).

– screwed:
– 3/4” NPT Male Plain Union
– 3/4” NPT Male Spherical Union
– 3/4” NPT Male Integral

– welded: 3/4” Socket Welding
– other connections on request.

Connection to the gauge body

Can be:
– type GP11:(Fig. 831): connection by stuffing boxes and end tubes.
– type GP12: connection by NPT screwed nipples (Fig. 832).
In both choices the connection is made by means of head-pieces (item 41 or 51) and allows easy dismantling of the gauges for servicing and easy rotating on its axis for the best reading, provided valves are closed even with vessel under pressure.

Centre to Centre distance

When these sets of valves are chosen for the level gauge, the value of the minimum vessel C. to C. distance is given from the formula:

– type **GP11:**
Minimum C. to C. = Body length + 113 mm
(CC min = B + 107 mm)

– type **GP12:**
Minimum C. to C. with 1/2” NPT nipples = Body length + 81 mm
(CC min = B + 81 mm)

Fig. 833

Material Schedule	Body and wetted parts	Trim	Remarks	Application
52	Forged carbon steel ASTM A 105	Stainless steel	Exclusion of copper, silver and their alloys.	General purpose
63	Forged stainless steel AISI 316	Stainless steel AISI 316	External not wetted parts of S.S. AISI 304 or 303.	Corrosive fluids and/or fluids at temperature lower than –29 °C
64	Forged stainless steel AISI 316	Stainless steel AISI 316	External not wetted parts of carbon steel. Exclusion of copper, silver and their alloys.	Corrosive fluids

Fig. 834 GP11 GP12

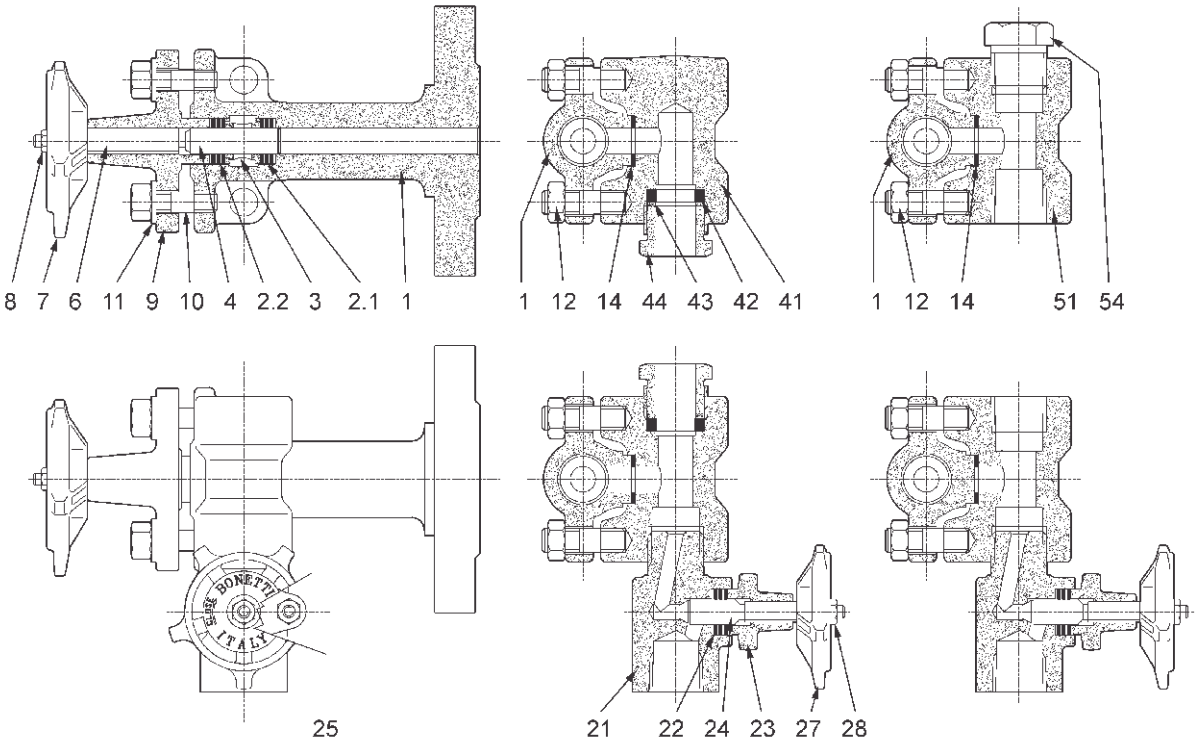

Fig. 866				
Item	Part	Part Material for Material Schedule		
		52	63	64
Upper and Lower Valve				
1	Body	ASTMA105	ASTM A182 F316	ASTM A182 F316
2.1	Lower Valve Ring	Graphite St. St.	Graphite St. St.	Graphite St. St.l
2,2	Upper Valve Ring	Graphite St. St.	Graphite St. St.	Graphite St. St.
3	Lantern Bush	Carbon Steel	ASTM A479 T316	ASTM A479 T316
4	Piston	ASTM A479 T316	ASTM A479 T316	ASTM A479 T316
6	Spindle	ASTM A479 T410	ASTM A479 T304	ASTM A479 T410
7	Handwheel	Aluminium	Aluminium	Aluminium
8	Handwheel Nut	Carbon Steel	Carbon Steel	Carbon Steel
9	Bonnet	ASTM A105	ASTM A182 F316	ASTM A105
10	Stud Bolt and Nut	A193 B7 - A194 2H	A193 B8 - A194 G8	A193 B7 - A194 2H
11	Washer	Carbon Steel	Carbon Steel	Carbon Steel
12	Stud Bolt and Nut	A193 B7 - A194 2H	A193 B8 - A194 G8	A193 B7 - A194 2H
14	Gasket	Asbestosfree	Asbestosfree	Asbestosfree
Drain Valve				
21	Body	ASTM A105	ASTM A182 F316	ASTM A182 F316
22	Valve Ring	Graphite St. St.	Graphite St. St.	Graphite St. St.
23	Bonnet	ASTM A105	ASTM A182 F316	ASTM A105
24	Needle	ASTM A479 T410	ASTM A479 T316	ASTM A479 T316
25	Screw	A193 B7	A193 B8	A193 B7
27	Handwheel	Aluminium	Aluminium	Aluminium
28	Handwheel Nut	Carbon Steel	Carbon Steel	Carbon Steel
41	Head GP11	ASTM A105	ASTM A479 T316	ASTM A479 T316
42	Packing Ring	Graphite St. St.	Graphite St. St.	Graphite St. St.
43	Stuffing Box Ring	Carbon Steel.	ASTM A479 T316	ASTM A479 T316
44	Stuffing Box Nut	Carbon Steel	ASTM A479 T316	Carbon Steel
51	Head GP12	ASTM A105	ASTM A479 T316	ASTM A479 T316
54	NPT Vent Plug	Carbon Steel	ASTM A479 T316	ASTM A479 T316

Optionals
- Vent Plug on the upper head-piece (standard for GP12)
- Vent Valve on the upper head-piece
- Automatic Safety Ball-Check, in the upper and lower valve
- External tracing for heating or cooling, by electrical wire or pipe (to be made on field)
- Intermediate support not connected with the vessel, for very long C. to C. distance.

Material Schedules
Standard Material Schedules as per Fig. 833.
Other Material Schedules available on request.
Parts material is listed on Fig. 866.

Request or Order
Please state:
- type of set: Code GP11 or GP12
- right-handed or left-handed
- connections to the vessel: to be detailed
- optionals, if any
- Material Schedule: Fig. 833

Service
Before the valves are put in service:
- shut off the upper and lower valve and lightly follow up the bonnet Nuts (10)
- open the drain valve and lightly follow up the bonnet Screws (25)
- follow up the Gaskets (14) by the Nuts (12).

Spare parts
One complete set of sealing elements for 1 level gauge consists of:
- 5 Valve Rings (item 2.1 - 2.2. - 22) B 10 x B 18 x 6
- 2 Gaskets (item 14) B 20 x B 10,5 x 1
- 2 Packing Rings (item 42) B 16 x B 23,5 x 5, for GP11 only.

BONETTI Gauge Valves

Set of Valves type G41, G42, GS41, GS42 suitable for ASME 1500 and PN 250

General information

These sets of valves are designed and manufactured expressly for use with level gauges and pressure gauges up to ASME 1500 and PN 250. For use with water steam, we recommend the type GS42 and G42, with outside screw and yoke.
These valves have bolted bonnet and metallic trim with renewable seat.
The valves are available:

OFFSET	with Inside Screw (Fig. 747)	Code G41
	with Outside Screw and Yoke(Fig. 748)	Code G42
STRAIGHT	with Inside Screw (Fig. 854)	Code GS41
	with Outside Screw and Yoke (Fig. 855)	Code GS42

They are both suitable for ASME 1500 and PN 250.

- The **Body** is of drop forged steel.
- The **Bonnet** is of drop forged steel and of the same material as body. It is bolted to the body by means of four bolts with nut. The advantages of this design are quite obvious, with respect to a bonnet screwed into the body or to a bonnet connected to the body by means of studs.
- The **Disk** is integral on the Stem, is made of stainless steel AISI 316 and is backseating against the bonnet when the valve is full open, for easy repacking under pressure..
- The **Seat** is of stainless steel AISI 316 (Monel or special material on request) and is easy renewable, being screwed into the body.
- One **Safety Ball-Check**of stainless steel AISI 316 (special material on request) is fitted to both valves as standard, for safety in the event of glass breakage. The safety ball is removed from its seat during the closing operation of the valve by means of the Stem extremity.
- The **Packing** is made of an adequate number of preformed rings of an approved high pressure - temperature quality. Special material on request.
- The **Name Plate** bears all prescribed indications and is fixed on each valve.
- For **Operating** three solutions are available:
  - Handwheel for plain-closing stem **Code 1**
  - Weighted lever for quick-closing stem **Code 2**
  - Double-ended lever for quick-closing stem **Code 3**

Connections to the vessel

Can be:
- flanged: integral flange up to 125 mm o.D. (standard)
  weld-on flange for major o.D.
  Please state:
  - Standard - Pressure class
  - Size - Finishing
- screwed: 3/4” NPT male union (standard)
  3/4” NPT male union spherical,
  3/4” NPT male integral.
- welded: 3/4” socket welding
- other connections on request.

Connections to the gauge body

Can be:
- screwed 1/2” NPT female for nipple (standard) **Code 4**
- screwed 3/4” NPT female for nipple,
- socket welding 1/2” or 3/4”
- with union tailpipe 1/2” NPT male and union nut (standard) **Code 5**
- stuffing box for glass tube 16 mm. o.D. **Code 6**
  Length of glass tube must be 21 mm. shorter than the Centre to Centre distance
- other connections on request.

Centre to Centre distance

When these sets of valves are chosen for the level gauge, the value of the minimum vessel C. to C. distance is given by tables for each level gauge type, provided that the connection between the level gauge and its valves is obtained by means of 1/2” NPT screwed nipples.

The min. C. to C. distance is given from the formula:
- Minimum C. to C. with 1/2” NPT nipples = Body length + 90 mm (CC min = B + 90 mm)
- If tailpipe connection with 1/2” NPT and Union nut is requested, 50 mm must be added to the minimum CC length.
- Minimum C. to C. with 3/4” NPT nipples becomes 30 mm longer.

Connection to drain and vent

Can be:
- screwed 1/2” NPT female (standard) **Code 7**
- screwed 3/4” NPT female,
- other connections on request.

Optionals (see also page 29)

- For Heating or Cooling the valves are available with internal tube (only G41 and G42).
- For Very Low Temperature the inside screw valves (type G41 and GS41) are available with prolonged stem.

Material Schedules

Material Schedules currently manufactured on Fig. 749.
Other Material Schedules with other materials on request.
Part material is listed on Fig. 750.

Request or Order

Please state

- OFFSET, inside screw	**Code G41**
- OFFSET, outside screw	**Code G42**
- STRAIGHT, inside screw	**Code GS41**
- STRAIGHT, outside screw	**Code GS42**
- Operating	**Code 1 or 2 or 3**
- Connections to the vessel	**to be detailed**
- Connections to gauge body	**Code 4 or 5 or 6**
- Connections to drain and vent	**Code 7**
- Material Schedule	**Code 52 or 55 or 63**
- Centre to Centre distance	**to be stated**

Code

When these sets are chosen with our standard variants, the use of our Code is recommended. For instance:
- 1 Set of valves

inside screw OFFSET	**Code G41**
operated by handwheel	1
connections to gauge body screwed 1/2” NPT female.	**4**
connections to drain and vent 1/2” NPT female.	**7**
material schedule	**52**
Resulting CODE:	**G41.1.4.7.52**

It is to be stated in detail:
- connections to the vessel,
- Centre to Centre distance.

Maintenance

These sets don’t need any special maintenance. We only recommend to check from time to time the tightening of Packing gland (45) and of body-bonnet Bolts (5).

Fig. 745 **Type G41 and GS41**

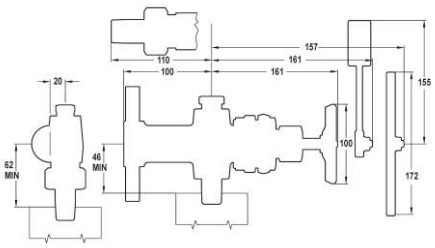

Fig. 746 **Type G42 and GS42**

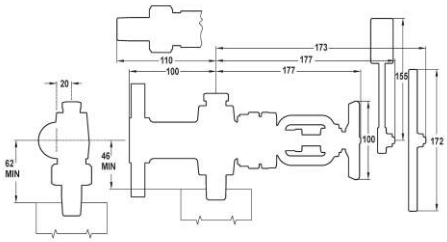

Fig. 749

Material Schedule	Body bonnet and wetted parts	Trim and Ball-check	Remarks	Application
52	Forged carbon steel ASTM A105	Stainless steel AISI 316	Exclusion of cooper silver and their alloys	General purpose
55	Forged carbon steel ASTM A350 LF2	Stainless steel AISI 316	External not wettedparts of S.S.AISI 304 or 303	Non corrosive fluids at low temperature up to –45,6 °C (–50 °F).
63	Forged stainless steel AISI 316	Stainless steel AISI 316	External not wetted parts of S.S. AISI 304 or 303	Corrosive fluids and/or fluids at temperature lower than –45,6 °C (–50 °F)

Fig. 747 **Type G41 (offset 20 mm)**

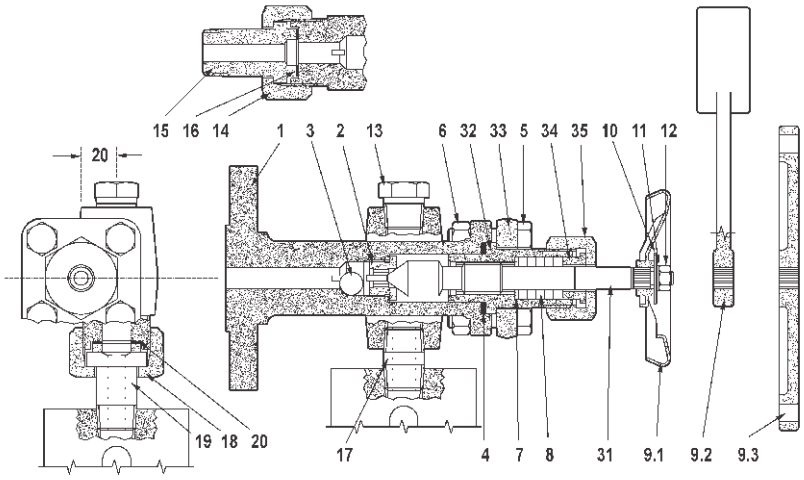

Fig. 748 **Type G42 (offset 20 mm)**

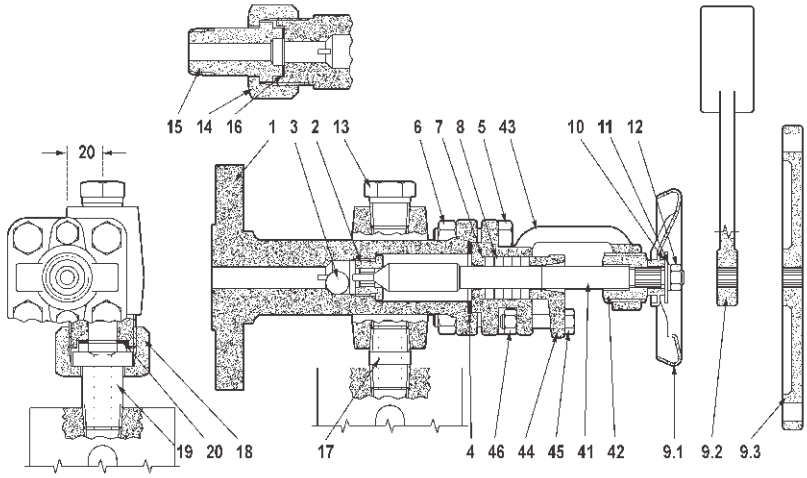

Fig. 854 - 855 **Type GS41 (straight)**
Type GS42 (straight)

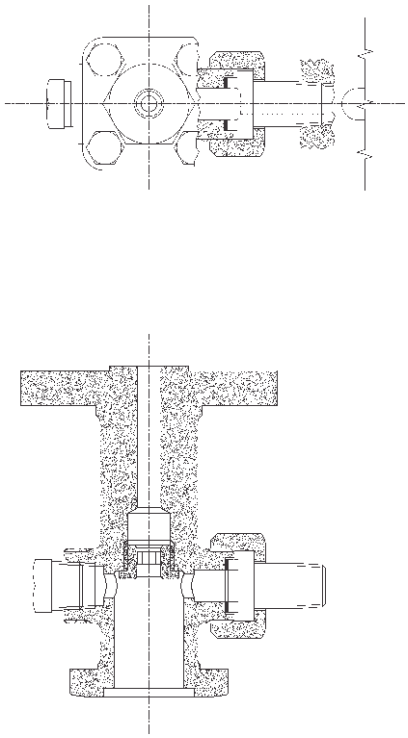

Note: remaining parts identical to:
- Fig. 747 for GS41
- Fig. 748 for GS 42

Fig. 750

Item	Part	Materials for Material Schedule 52	55	63
1	Body	ASTM A105	ASTM A350 LF2	S.S. AISI 316
2	Seat	S.S. AISI 316	S.S. AISI 316	S.S. AISI 316
3	Ball-check	S.S. AISI 316	S.S. AISI 316	S.S. AISI 316
4	Bonnet joint ring	Soft iron	S.S. AISI 316	S.S. AISI 316
5	Bolt	ASTM A193 B7	S.S. AISI 303	S.S. AISI 303
6	Nut	ASTM A194 2H	S.S. AISI 303	S.S. AISI 303
7	Bottom ring	Carbon steel	S.S. AISI 316	S.S. AISI 316
8	Packing	Preformed rings	Preformed rings	Preformed rings
9.01	Handwheel	Carbon steel	Carbon steel	Carbon steel
9.02	Weighted lever	Carbon steel	Carbon steel	Carbon steel
9.03	Double-ended lever	Carbon steel	Carbon steel	Carbon steel
10	Name plate	Stainless steel	Stainless steel	Stainless steel
11	Washer	Carbon steel	Carbon steel	Carbon steel
12	Nut	ASTM A194 2H	S.S. AISI 303	S.S. AISI 303
13	Taper plug (on request)	Carbon steel	S.S. AISI 316	S.S. AISI 316
14	Union nut	Carbon steel	S.S. AISI 303	S.S. AISI 303
15	Union tailpipe	Carbon steel	S.S. AISI 316	S.S. AISI 316
16	Joint ring	Suitable compressed material		

Item	Part	Materials for Material Schedule 52	55	63
17	Nipple	Carbon steel	S.S. AISI 316	S.S. AISI 316
18	Nut	Carbon steel	S.S. AISI 303	S.S. AISI 303
19	Union tailpipe	Carbon steel	S.S. AISI 316	S.S. AISI 316
20	Joint ring	Suitable compressed material		
31	Stem	S.S. AISI 316	S.S. AISI 316	S.S. AISI 316
32	Bonnet	ASTM A105	ASTM A350 LF2	S.S. AISI 316
33	Bonnet flange	ASTM A105	ASTM A350 LF2	S.S. AISI 304
34	Gland	Carbon steel	S.S. AISI 304	S.S. AISI 304
35	Gland nut	Carbon steel	S.S. AISI 304	S.S. AISI 304
41	Stem	S.S. AISI 316	S.S. AISI 316	S.S. AISI 316
42	Stem bush	S.S. AISI 410	S.S. AISI 410	S.S. AISI 410
43	Bonnet	ASTM A105	ASTM A350 LF2	S.S. AISI 316
44	Packing gland	Carbon steel	S.S. AISI 304	S.S. AISI 304
45	Bolt	ASTM A193 B7	S.S. AISI 303	S.S. AISI 303
46	Nut	ASTM A194 2H	S.S. AISI 303	S.S. AISI 303

General information

These sets of valves consist of metallic seating valves.
Each set is generally composed by:
- 2 shut-off valves sized 1” (1 top and 1 bottom)
- 1 drain valve sized 1/2”.

The Set of valves fully comply with the main international Standard and specifically with ASME Code Section I, when applicable. The shut-off valves are bonnetless type, operated by handwheel with rising non-rotating stem and stroke indicator.
- The **Body** (1) is forged of carbon steel or stainless steel and is the only valve part under pressure. Seat is integral of Stellite deposited with highly specialized and automatic procedure. The Backseat ring (46) is threaded into the body and can be easily replaced.
- The **Yoke** (2) is always forged and is standard of carbon steel, has structural functions only and is not under pressure. Threaded outside the body and kept in place by means of one welding tack that can be easily removed and remake for inspection or maintenance.
- The **Disk** (3) is of alloy steel whit seating surface Stellite. When backseated, disk is pulled against bonnet with axial (not rotating) movement.
- The **Stem** (4) is of stainless steel, heat treated. Threads are ACME. Being designed rising and non-rotating insures a lower driving and closing torque and less wear of packing rings.
- The Yoke Bushing (11) is usually of special aluminium bronze and is kept in place by two Antifriction Rings (43) and form a Locking Ring (39).
- The **Packing** includes one Bottom Ring (5), one Graphite Packing (6), one Packing Flange (10), two Swing Bolts (8) turning for easier repacking.
- The **Safety Ball-check** (80) are in stainless steel AISI 316 and tighten on a seat made of stainless steel AISI 316.

Fig. 867

Item	Part	Part Material for Material Schedule 51	64	63
1	Body	ASTM 105 + Stellite Gr. 6	ASTM A182 F316 + Stellite Gr. 6	ASTM A182 F316 + Stellite Gr. 6
2	Yoke	ASTM A105	ASTM A105	ASTM A105
3	Disk	ASTM A479 T.316	ASTM A479 T.316	ASTM A479 T.316
4	Stem	ASTM A182 F6	ASTM A564 T.630	ASTM A564 T.630
5	Bottom rlng	ASTM A479 T.316	ASTM A479 T.316	ASTM A479 T.316
6	Packing	Graphite	Graphite	Graphite
8	Swing bolt	ASTM A193 B7	ASTM A193 B7	ASTM A193 B8
9	Pin	Alloy steel	Alloy steel	Alloy steel
10	Packing flange	ASTM A105	ASTM A182 F316	ASTM A182 F316
11	Yoke bushing	ASTM B150 - C62300	ASTM B150 - C62300	ASTM B150 - C62300
12	Handwheel	Carbon steel	Carbon steel	Carbon steel
14	Disk pad	ASTM A182 F6	Stainless steel + treatment	Stainless steel + treatment
15	Handwheel nut	Carbon steel	Carbon steel	Carbon steel
15A	Bolt nut	ASTM A194 2H	ASTM A194 2H	ASTM A194 Gr. 8
20	Name plate	Stainless steel	Stainless steel	Stainless steel
23	Antirotation / indicator	Carbon steel. + Zincplating	Carbon steel. + Zincplating	Stainless Steel
39	Locking ring	ASTM A105	ASTM A105	ASTM A105
42	Retaining ring	Alloy steel	Alloy steel	Alloy steel
43	Antifriction washer	Carbon steel C70	Carbon steel C70	Carbon steel C70
46	Backseat ring	ASTM A564 T.630	ASTM A564 T.630	ASTM A564 T.630
48	Gasket	Graphite	Graphite	Graphite
70	Connecting ring	Stellite	Stellite	Stellite
80	Safety ball	ASTM A479 T.316	ASTM A479 T.316	ASTM A479 T.316
81	Bottom taper plug for ball	ASTM A105	ASTM A479 T.316	ASTM A479 T.316
82	Top taper plug for ball	ASTM A105	ASTM A479 T.316	ASTM A479 T.316
83	Welded nipple	ASTM A105	ASTM A479 T.316	ASTM A479 T.316
84	Connecting flange	ASTM A105	ASTM A105	ASTM A479 T.316
85	Lenticular joint ring	ASTM A479 T.316	ASTM A479 T.316	ASTM A479 T.316
86	Joint ring	Graphite	Graphite	Graphite

Connection to the gauge body

Can be:
- type **G51** (Fig. 861, 857): flanged on the side of the gauge body,
- type **G52** (Fig. 862, 858, 859): flanged on the axis of the gauge body,
- type **G55** (Fig. 863, 860): flanged with the interposition of a water column,
- different connections can be delivered, according to customer prescription.

Connection to the drum

Can be:
- **Flanged**:
  - The flange is always wekded to the valve body. Please specify Standard, Rating and Size
- **SW**:
  - Please specify Standard, Rating and Size
- **BW**
  - Please specify Standard, Rating and Size
- **Screwed**:
  - Please specify Standard, Rating and Size

Fig. 863 Type G55

Top Valve

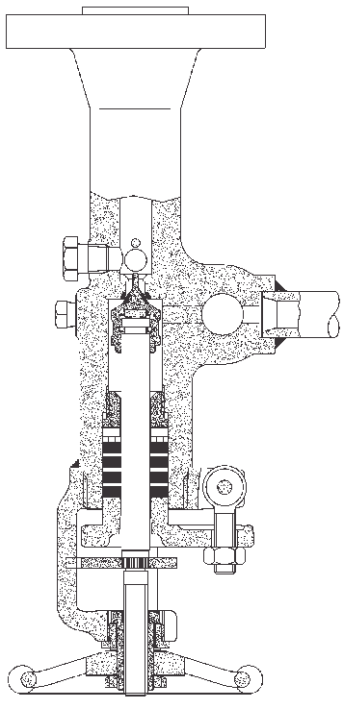

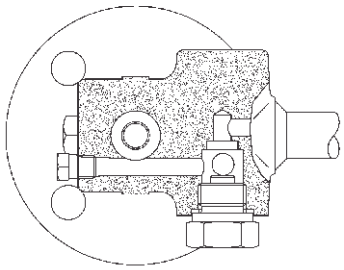

Bottom Valve

Optionals (see also page 29)

Following optionals can be supplied:
- Vent valve on top valve,
- Safety ball-check on bottom valve, vertical,
- Safety ball-check on top valve, horizontal with removal device.

Material Schedules (see Fig. 867)

Material Schedules currently manufactured on Fig. 867.
Other materials on request.

Maintenance

These sets of valves do not need particular maintenance.
We would suggest to use good quality packings in the stuffing-box and to follow up the bolts of the packing gland from time to time.

Fig. 861 Type G51 Top and bottom Valve

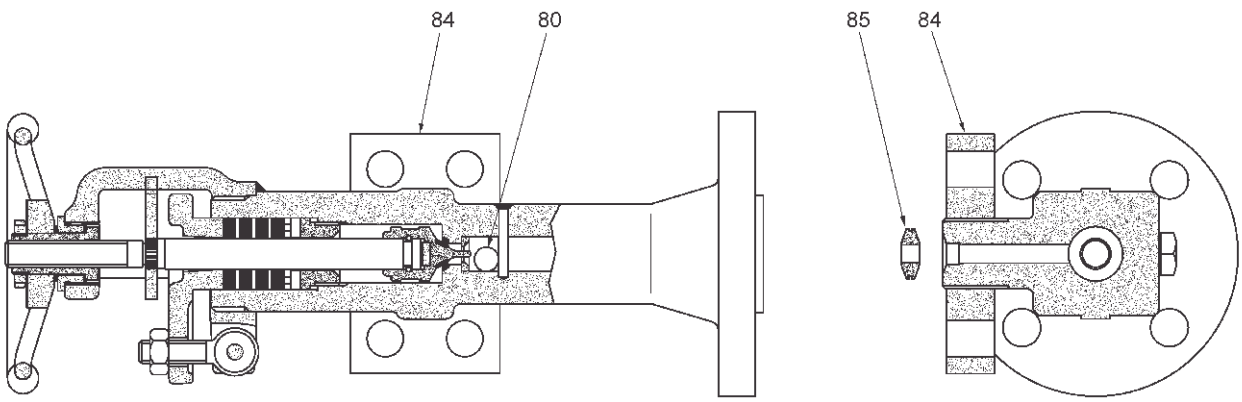

Fig. 862 Type G52

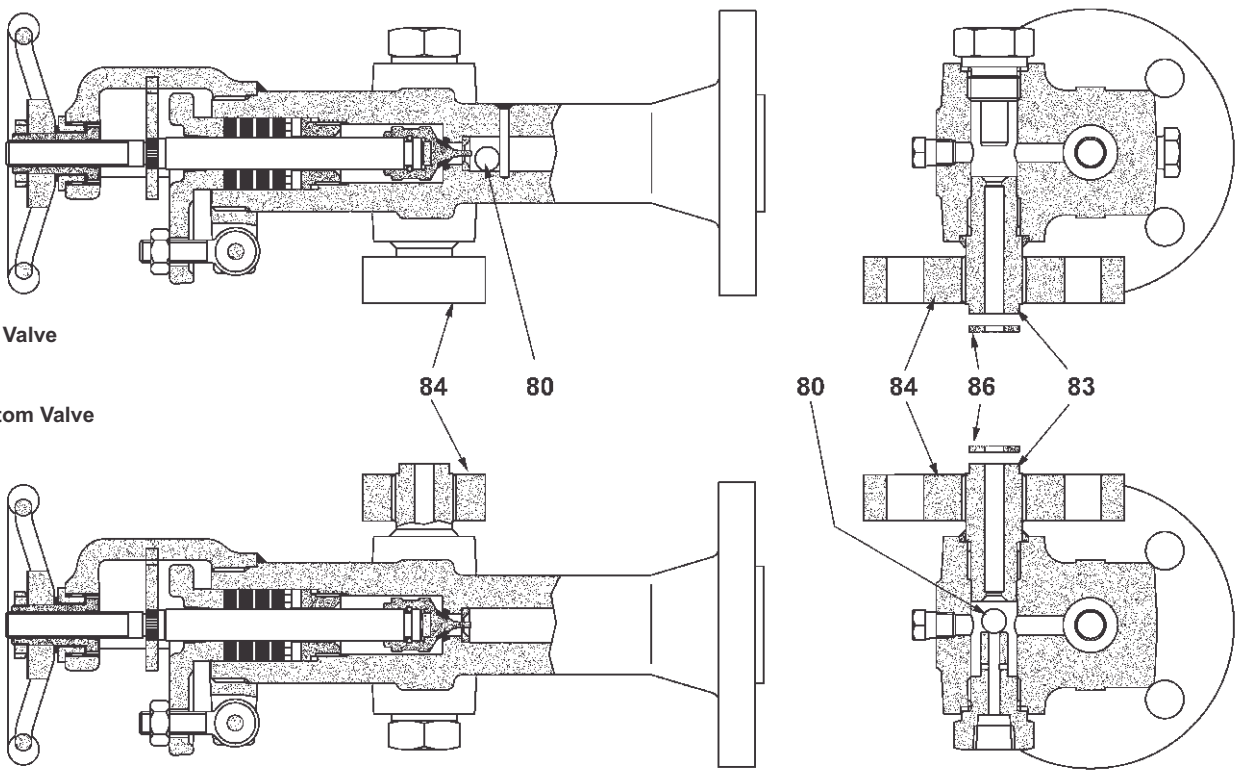

Bolting torques

- Type BR14	30 Nm	- Type BR24	40 Nm
- Type BR12	50 Nm	- Type BR25	40 Nm
- Type BR22	30 Nm	- Type BR26-BR27	40 Nm
- Type BR23	40 Nm	- Type BR28	50 Nm

1 Centre piece
2 Sealing joint
3 Reflex glass
4 Cushion joint
5 Cover plate
6 U stud bolt with nuts
7 O stud bolt with nuts
8 Gauge body
9 Wedge piece
10 Tightening bolt
11 Bolt with nut
12 Clamp
13 Angular piece

Fig. 817 **Type BR14**

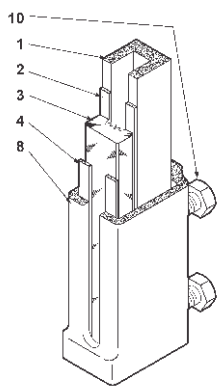

Fig. 816 **Type BR12**

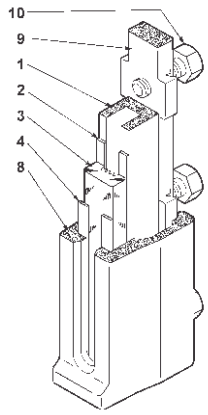

Fig. 760 **Type BR22**

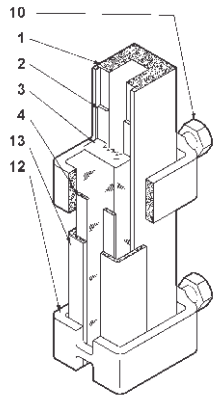

Fig. 761 **Type BR23**

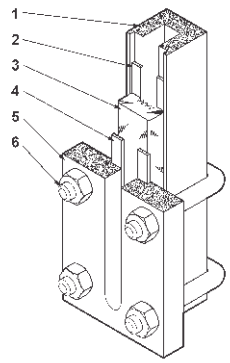

Fig. 762 **Type BR24**

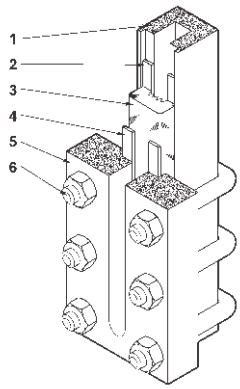

Fig. 819 **Type BR28**

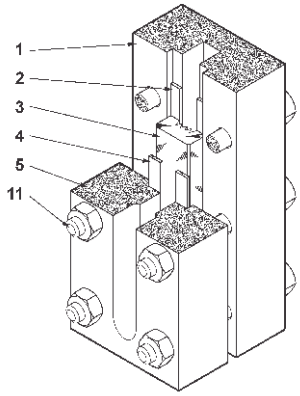

Fig. 763 **Type BR25**

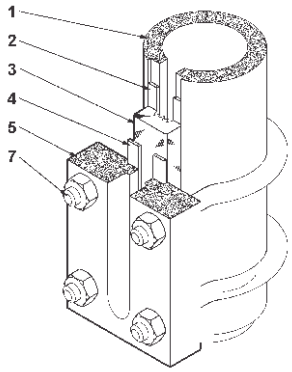

Service maintenance

Before putting in service, check the bolting torque as recommended on top of this page. Tighten the bolts alternatively, starting from centre of gauge. To avoid glass thermal shocks during start-up, the gauge temperature must gradually increase in order to allow both the metallic structure and the glass to reach the operating temperature. Proceed as follows: close bottom shut-off valve, completely open drain, partially open top shut-off valve to allow a **minimum flow** outlet of steam. Maintain flow outlet until proper temperature is reached, then close drain valve; the condensate coming through top valve will fill the gauge column. At this step completely open **very slowly**bottom shut-off valve, then completely open top shut-off valve.
In case during operation fluid impurities affect glass, proceed to gauge washing as above described

Important notice

Maintenance must be made immediately when:
- leakage appears, even if very small. In this case: shut of and cool down the gauge. Tighten the gauge nuts at the recommended bolting torque;
- the glass appears opaque or slightly white specially in the steam area;
- grooves of the reflex glass show sign of corrosion and/or erosion and the reading of the level is not clear.

The lack of maintenance and the lack of replacement of the deteriorated parts can cause the breakage of the glass with all the relevant consequences.

Dismantling

- Shut off the valves, let out the pressure and remove the level gauge body from the valves.
- Loosen the tightening bolts and remove all component pieces.
- Clean the sealing and cushion surfaces very carefully, making sure that they are clear of any remnants of joints.
- Smear the threads of the tightening bolts with a thin layer of graphite grease;

Reassembling

- Fit in a new glass with new joints (never re-use joints which have already been in service!): remember that the sealing joint must be placed on the side where the grooves are.
- Reassemble all the components in the right sequence. Tighten the bolts alternatively, starting from centre of gauge.
- Never grip the level gauge body in a vice during the reassembling, but put it on a plane surface.
- Never use adhesive or hermetic mastic. Remember that all surfaces must be perfectly clean.

Spare parts

- When ordering spare parts please state:
  - type and size of the gauge body
  - item number of the spare part, as shown in the above list
  - construction material.
- As regards reflex glasses and their joints, please remember that:
  - each type BR12, BR14 gauge is fitted with 1 reflex glass type A (section 30x17 mm),
  - each type BR22, BR23, BR24, BR25, BR28 gauge is fitted with 1 reflex glass type B (section 34x17 mm).

For type BR13, separate instructions on request.

Bolting torques

- Type BT23-BC23	40 Nm	- Type BT28-BC28	60 Nm
- Type BT24-BC24	40 Nm	- Type Bt29	70 Nm
- Type Bt25	40 Nm	- Type BT32-BC32	90 Nm
- Type BT26-BT27	40 Nm	- Type BT33-BC33	80 Nm

1 Centre piece
2 Sealing joint
3 Glass protection sheet (where applicable)
4 Plate glass
5 Cushion joint
6 Cover plate
7 Bolt with nut
8 Stud bolt with nut
9 Stud with nut
13 Angular Piece
14 Belleville Washer

Fig. 764 **Type BT23**

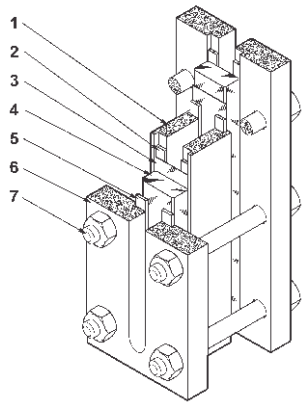

Fig. 765 **Type BT24**

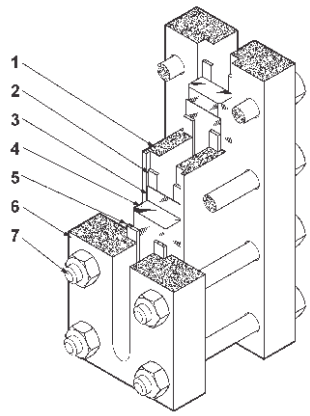

Fig. 766 **Type BT25**

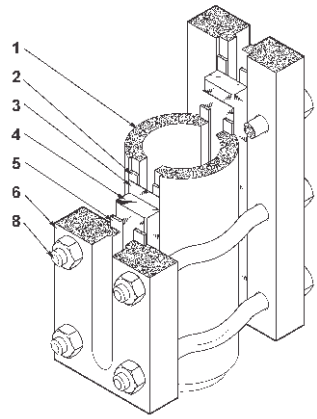

Fig. 767 **Type BT28 & BT29**

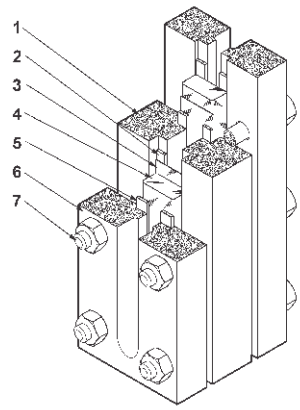

Fig. 814.1 **Type BT33**

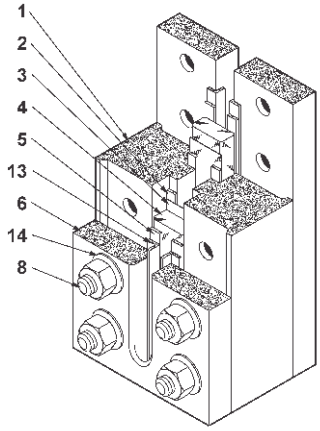

Fig. 815.1 **Type BT32**

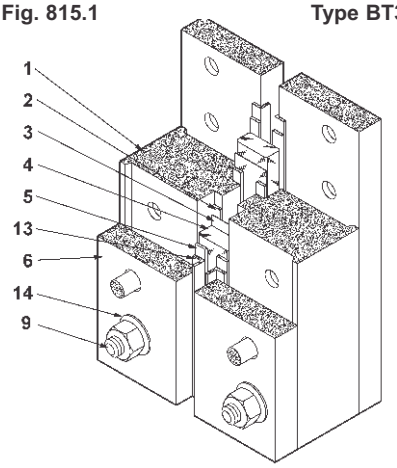

Service maintenance

Before putting in service, check the bolting torque as recommended on top of this page. Tighten the bolts alternatively, starting from centre of gauge. To avoid glass thermal shocks during start-up, the gauge temperature must gradually increase in order to allow both the metallic structure and the glass to reach the operating temperature. Proceed as follows: close bottom shut-off valve, completely open drain, partially open top shut-off valve to allow a **minimum flow** outlet of steam. Maintain flow outlet until proper temperature is reached, then close drain valve; the condensate coming through top valve will fill the gauge column. At this step completely open **very slowly**bottom shut-off valve, then completely open top shut-off valve.
In case during operation fluid impurities affect glass or protection shield, proceed to gauge washing as above described

Important notice

Maintenance must be made immediately when:
- leakage appears, even if very small. In this case: shut of and cool down the gauge. Tighten the gauge nuts at the recommended bolting torque;
- the glasses appear opaque or slightly white specially in the steam area;
- the reading of the level is not clear.

The lack of maintenance and the lack of replacement of the deteriorated parts can cause the breakage of the glasses with all the relevant consequences.

Dismantling

- Shut off the valves, let out the pressure and remove the level gauge body from the valves.
- Loosen and take out the tightening bolts and remove all component pieces as well.
- Clean the sealing surfaces of the centre piece and the cushion surfaces of the cover plates very carefully, making sure that they are clear of any remnants of joints.
- Smear the threads with a thin layer of graphite grease.

Reassembling

- Fit in new glasses with new joints (never re-use joints which have already been in service!). Remember that the glass protection sheet must be in direct contact with the inner side of the glasses (between the glass and the fluid), and that the sealing joint must be placed on the sealing surface of the centre piece. Reassemble all the other components in the right sequence, and tighten the bolts alternatively, starting from centre of gauge.
- Never grip the level gauge body in a vice during the reassembling, but put it on a plane surface.
- Never use adhesive or hermetic mastic. Remember that all surfaces must be perfectly clean.

Spare parts

- When ordering spare parts please state:
  - type and size of the gauge body
  - item number of the spare part, as shown in the above list
  - construction material.
- As regards plate glasses their joints and protection sheets, remember that each level gauge is fitted with 2 plate glasses type B (section 34x17 mm).

For type BC1 (bicolour), separate instructions on request.

Fig. 773-Remark 7

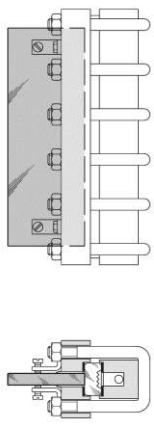

Fig. 826 Illuminator type GSI

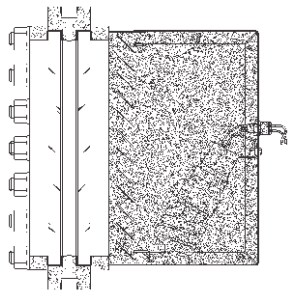

Fig. 827 Illuminator type EXGSI

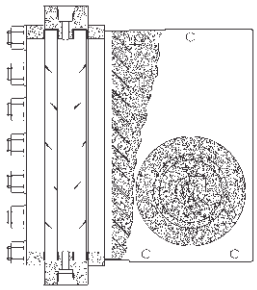

Fig.776

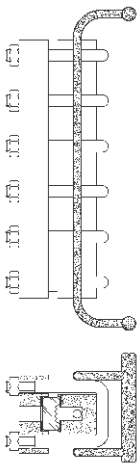

Fig. 828 Illuminator type EXPIN

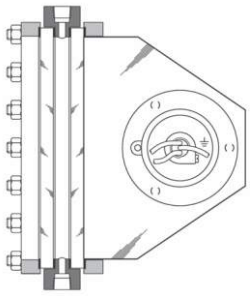

Fig.870 LED Illuminator type LS & LX

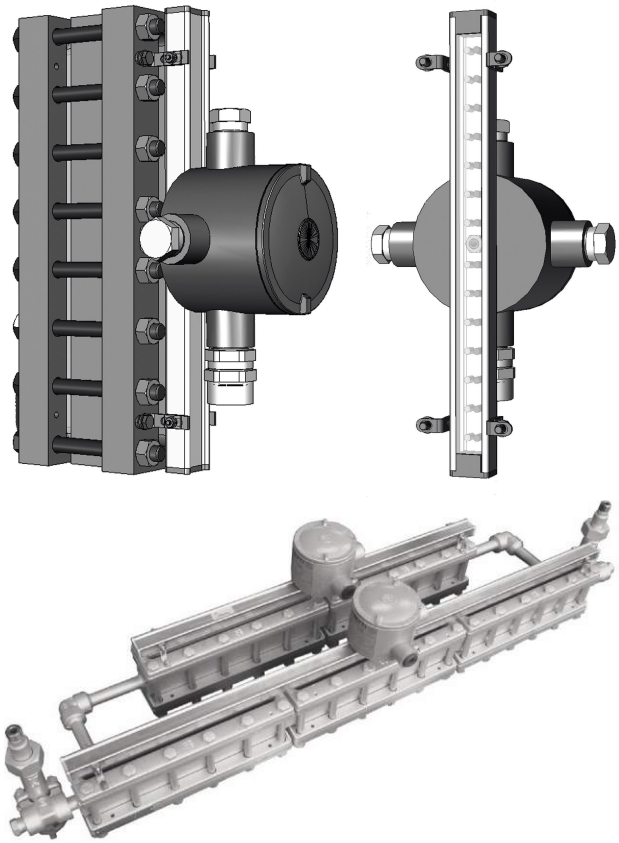

Fig. 820

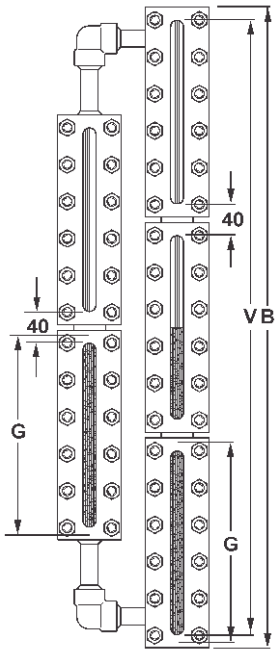

Fig. 869

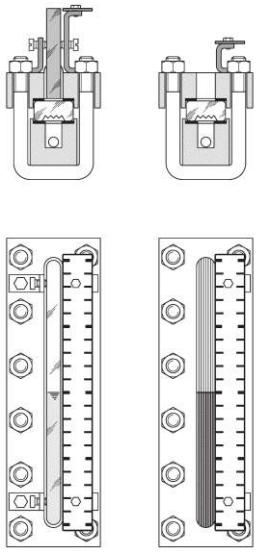

Fig. 870 - LED Illuminators Tipe LS & LX
Those new illuminators are supplied as standard.
They can be supplied with white light for transparent level gauges or with red & green light for bicolour level gauges. Special colours (as fully blue or fully red or fully green etc.) upon request.

The advantages of such illuminators are:
- competitive price and very low LCC (Life Cycle Cost)
- low energy consumption: <8 W for each meter lenght
- small size and light weigth
- long life (up to 100,000 hours = 10 years of continuous working)
- vibrations proof
- easy wiring: 110/230 Vac @ 50/60Hz or 18/36 Vdc
- approvals:
  - CE (LVD & EMC),
  - ATEX (II 2G Ex d mb IIC T6 - II 2D Ex tb IIIC T70 °C IP66)
- on board transformer:
  - **Type LS**: 110/230V > 24V - 8W/mt,
  - **Type LX**: 110/230V > 24V - 8W/mt,
    ATEX II 2G Ex d mb IIC T6 - II 2D Ex tb IIIC T145 °C IP66,
- junction box EExd with ¾" NPT-F connection
- working temperature from -40 °C up to 80 °C
- IP65 protection as standard - IP66 upon request

Fig. 773 - Non-frosting block for reflex level gauge.

Fig. 776 - Level gauge with external heating or cooling tube. Can be supplied for reflex (as in figure) or transparent level gauges.

Fig. 820 - Combined level gauge with uninterrupted visible length. Reflex (as in figure) or transparent.

Fig. 869 - Calibrated scale. The standard calibrated scale is in stainless steel, with calibration in cm. On request, any different material or calibration can be supplied.

Note: Illuminators Type GSI (Fig. 826 - not explosion-proof), EXGSI (Fig. 827 - explosion-proof), EXPIN (Fig. 828 - for diffused lighting, explosion-proof), EXGSIBC and EXBSIN (explosion proof for bicolour level gauges) are out of production, but can be supplied as spares upon request.

Fig. 777

Type of Gauge	Type of glass						Accessories										
	Reflex			Transparent			Glass Protection			Non frosting blocks	Heating or cooling		Applicable i lluminator	Graduated Scale	Floats	Uninterrupted visible length	Bolting Torque Nm each Bolt
	A	B	A-BR13	Tube	B	Disk	internal		external		internal	external					
							Mica	Kel-F		Remark 7			Remark	Remark 9	Remark 9	Fig. 775	
BR14	X	–	–	–	–	–	NA	NA	NA	NA	NA	NA	1	A	NA	NA	30
BR 12	X	–	–	–	–	–	NA	NA	NA	NA	NA	NA	1	A	NA	NA	50
BR22	–	X	–	–	–	–	NA	NA	NA	NA	A	A	1	A	NA	A	30
BR23	–	X	–	–	–	–	NA	NA	V	A	A	A	1	A	NA	A	40
BR24	–	X	–	–	–	–	NA	NA	V	A	A	A	1	A	NA	A	40
BR28	–	X	–	–	–	–	NA	NA	V	A	A	A	1	A	NA	A	50
BR25	–	X	–	–	–	–	NA	NA	V	A	A	A	1	A	NA	A	40
BR13	–	–	X	–	–	–	NA	NA	NA	A	A	NA	1	A	NA	NA	(Remark 8)
BR26	–	X	–	–	–	–	NA	NA	V	A	A	NA	1	A	NA	NA	40
BR27	–	X	–	–	–	–	NA	NA	V	A	A	NA	1	A	NA	NA	40
BTV	–	–	–	X	–	–	NA	NA	R	NA	A	NA	1	A	A	–	–
BT23	–	–	–	–	X	–	A	A	V	A	A	A	2, 3, 6	A	A	A	40
BT24	–	–	–	–	X	–	A	A	V	A	A	A	2, 3, 6	A	A	A	40
BT25	–	–	–	–	X	–	A	A	V	A	A	A	3, 6	A	A	A	40
BT28	–	–	–	–	X	–	A	A	V	A	A	A	2, 3, 6	A	A	A	60
BT29	–	–	–	–	X	–	A	A	V	A	A	A	2, 3, 6	A	A	A	70
BT33	–	–	–	–	X	–	A	A	V	A	A	A	2, 3, 6	A	A	A	80
BT32	–	–	–	–	X	–	A	A	V	A	A	NA	2, 3, 6	A	A	A	90
BT26	–	–	–	–	X	–	A	A	V	A	A	NA	1	A	NA	NA	40
BT27	–	–	–	–	X	–	A	A	V	A	A	NA	1	A	NA	NA	40
BC23	–	–	–	–	X	–	C	NA	NA	NA	NA	NA	4, 5, 6	NA	NA	NA	40
BC24	–	–	–	–	X	–	C	NA	NA	NA	NA	NA	4, 5, 6	NA	NA	NA	40
BC28	–	–	–	–	X	–	C	NA	NA	NA	NA	NA	4, 5, 6	NA	NA	NA	60
BC32	–	–	–	–	X	–	C	NA	NA	NA	NA	NA	4, 5, 6	NA	NA	NA	90
BC 1	–	–	–	–	–	X	C	NA	NA	NA	NA	NA	4, 5, 6	NA	NA	NA	(Remark 8)

Keys and Remarks to Fig. 777

X Type of glass fitted in the gauge.
A Applicable.
C Compulsory.
NA Not applicable

R recommended U shape metallic protector (Fig. 720) and/ or acrylic resin tube protector sealed by O-Rings to the stuffing box gland (Fig. 721).
V External glass protection (sheet of mica or Kel-F) may be suggested for protecting the glasses from corrosive environmental (see page 38).

1 Often not necessary. If necessary any usual lighting apparatus can be utilised. Apply to our Technical Service for details.
2 Apparatus for lighting of the meniscus at water level from lower position, not explosion-proof (Fig. 870). Type LED-LS.
3 Apparatus for lighting of the meniscus at water level from lower position, explosion-proof (Fig. 870). Type LED-LX.
4 Apparatus for lighting bicolour level gauges, not explosion-proof (Fig. 870), Type LED-LS
5 Apparatus for lighting bicolour level gauges, explosion-proof (Fig. 870), Type LED-LX
6 Illuminators Type GSI (Fig. 826 - not explosion-proof), EXGSI (Fig. 827 - explosion-proof), EXPIN (Fig. 828 - for diffused lighting, explosion-proof) are out of production, but can be supplied as spares upon request.
7 Non-frosting blocks:
– .for reflex gauge and for transparent gauge (Fig. 773)
– for transparent level gauges an illuminator (Fig. 870) can also be fitted.
Recommended height of blocks, see page 38.
8 See specific instructions.
9 Other optionals:
– Engraved scales to customer requirements.
– Mirrors to transmit image below to the observer.
– Closed circuit television equipment, which allows level reading on monitor in the control room and/or transmit a 4¸20 mA signal.
– Fibre optic remote viewing device to transmit image in the control room, by means of our Red Cherry System. Ask for peculiar bulletin.
– Specific gravity glass floats can be provided in a transparent level gauge where the interface between two immiscible liquids is to be observed.
– Additional side connected bodies (reflex or transparent) to reach un-interrupted visible length (Fig. 820)
– Heating or cooling tracing tubes for reflex or transparent gauges (Fig. 776).
– For very long C to C distance, an intermediate support (communicating with the vessel) can be fitted to the level gauge body.

Sight Glasses for **BONETTI** Level Gauges

Standards and Quality

Glasses fitted in our level gauges and spare glasses comply with the following Standards:

- DIN 7081 - ONORM M 7354 - MIL G 18498 B
- TGL 7210 - OMV H 2009 - Esso Eng. Spec. 123
- BS 3463 - JIS B 8211 - S.O.D. Spec. 123

Physical and chemical features:

- Resistance to bending strain: >150 N/mm2
- Mean coefficient of linear expansion (30 °C to 300 °C): 5,0 . 10-6 . K-1 - DIN 52328
- Transition temperature: 550 °C - DIN 52324.
- Hydrolytic resistance: Class 1 - DIN 12111 and ISO 719
- Alkali resistance: Class 2 - DIN 52322 and ISO 695
- Acid resistance: Class 1 - DIN 12116

Material is always borosilicate glass pre-stressed and optically tested."Pre-Stressed", "hardened", "extra hard" and similar definitions are perfectly equivalent.

We never use "soda-lime" glasses, since they have quite insuffi-cient features.

Special attention shall be paid to length, width, thickness and especially flatness tolerances. From the latter point of view BONETTI sight glasses have very strict tolerance values, definitely lower than most of the ones on the market. What above ensures less stress and longer life of glass and joints.

Reflex or transparent glasses
There are two types of sight glasses:

Reflex Glass

Fig. 801

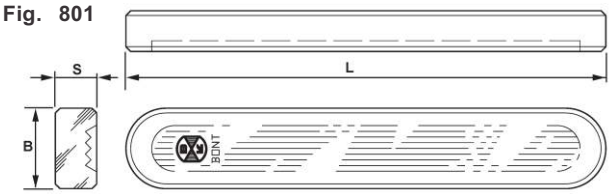

These glasses have one smooth face (external face) and the other face provided with moulded prismatic grooves (internal face).
For application with reflex level gauges.

Reflex glasses have following dimensions:

Size	Type A			Type B			Type A-BR13		
	Length L	Width B	Thickn. S	Length L	Width B	Thickn. S	Length L	Width B	Thickn. S
1	115	30	17	115	34	17	115	30	17
2	140	30	17	140	34	17	140	30	17
3	165	30	17	165	34	17	165	30	17
4	190	30	17	190	34	17	190	30	17
5	220	30	17	220	34	17	220	30	17
6	250	30	17	250	34	17	250	30	17
7	280	30	17	280	34	17	280	30	17
8	320	30	17	320	34	17	320	30	17
9	340	30	17	340	34	17	340	30	17

- Sizes of glasses are now indicated by Arabic numerals (1, 2, etc.). Former size indication was in Roman numerals (I, II, etc.).
- Former size indication was in Roman numerals (I, II, etc.).

Transparent Glasses

Fig. 802

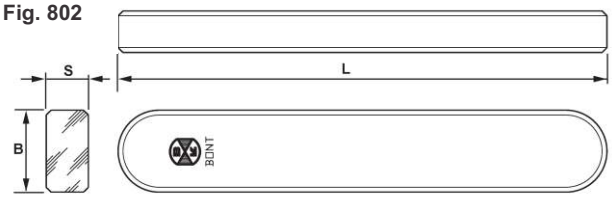

These glasses have both smooth faces.
For application with transparent level gauges.
Transparent glasses have following dimensions:

Size	Type A			Type B			Type A-BT12		
	Length L	Width B	Thickn. S	Length L	Width B	Thickn. S	Length L	Width B	Thickn. S
1	115	30	17	115	34	17	-	-	-
2	140	30	17	140	34	17	-	-	-
3	165	30	17	165	34	17	163	27,6	16,8
4	190	30	17	190	34	17	188	27,6	16,8
5	220	30	17	220	34	17	218	27,6	16,8
6	250	30	17	250	34	17	248	27,6	16,8
7	280	30	17	280	34	17	278	27,6	16,8
8	320	30	17	320	34	17	318	27,6	16,8
9	340	30	17	340	34	17	338	27,6	16,8

- Sizes of glasses are now indicated by Arabic numerals (1, 2, etc.). Former size indication was in Roman numerals (I, II, etc.).
- Transparent glasses Type A (cross section 30 x 17 mm) are only spare parts for old pattern level gauges manufactured by us before 1945.
- Transparent glasses type A-BT12 are only spare parts for transparent bodies type BT12, no more in production.

A special transparent glass is the round glass for application with high pressure (usually bicolour) level gauges. This glass is a small disc (Fig. 792.4) with very strict tolerances.

Fig. 792.4

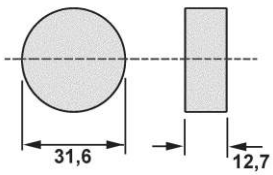

Joints for glasses

- Each sight glass is usually supplied with 2 joints (1 sealing joint + 1 cushion joint).
- Length and width of joint are the same as those of the respective glass.
- Reflex glasses type A-BR13 - for fitting in reflex gauges type BR13 - need special sized joints. See maintenance instructions.
- Transparent glasses type A-BT12 - for fitting in transparent gauges type BT12, no more in production - need special sized joints. See maintenance instructions.

Protection for glasses

When glass protection against corrosive fluids is to be taken in consideration (including boiler water pressured over 35 bar), you must remember that only smooth surfaces can be shielded by smooth sheets having same length and width as sight glass.
Therefore:

- reflex glasses: only external face can be shielded by mica sheets or other materials against corrosive environmental agents,
- transparent glasses: both faces can be shielded by mica or transparent polytrifluorochloroethylene (Kel-F) sheets. Protection of the internal glass face in contact with fluid is usually sufficient.

Mica sheets inside level gauges are always recommended for application with water steam: thickness of mica sheets is usually 0.15 to 0.20 mm.

Non-frosting Blocks

Frost on gauge obstructing level reading could develop when level gauge operates at fairly low temperature.
In such cases non-frosting block of transparent acrylic resin must be fastened and sealed outside the gauge body.
This block shall protrude according to the thickness of the frost (see Fig. 773 and 829).

Recommended protrusion:

Working temperature of fluid	Protrusion of block
120 °C through –19 °C	38 mm
–20 °C through –49 °C	75 mm
–50 °C through –99 °C	150 mm
–100 °C and lower	200 mm

Conversion Table from °C to °F

°C	°F	°C	°F	°C	°F	°C	°F
–270	–454	165	329	520	968	1100	2012
–260	–436	170	338	525	977	1120	2048
–250	–418	175	347	530	986	1140	2084
–240	–400	180	356	535	995	1160	2120
–230	–382	185	365	540	1004	1180	2156
–220	–364	190	374	545	1013	1200	2192
–210	–346	195	383	550	1022	1220	2228
–200	–328	200	392	555	1031	1240	2264
–190	–310	205	401	560	1040	1260	2300
–180	–292	210	410	565	1049	1280	2336
–170	–274	215	419	570	1058	1300	2372
–160	–256	220	428	575	1067	1320	2408
–150	–238	225	437	580	1076	1340	2444
–140	–220	230	446	585	1085	1360	2480
–130	–202	235	455	590	1094	1380	2516
–120	–184	240	464	595	1103	1400	2552
–110	–166	245	473	600	1112	1420	2588
–100	–148	250	482	605	1121	1440	2624
– 95	–139	255	491	610	1130	1460	2660
– 90	–130	260	500	615	1139	1480	2696
– 85	–121	265	509	620	1148	1500	2732
– 80	–112	270	518	625	1157	1520	2768
– 75	–103	275	527	630	1166	1540	2804
– 70	– 94	280	536	635	1175	1560	2840
– 65	– 85	285	545	640	1184	1580	2876
– 60	– 76	290	554	645	1193	1600	2912
– 55	– 67	295	563	650	1202	1620	2948
– 50	– 58	300	572	655	1211	1640	2984
– 45	– 49	305	581	660	1220	1660	3020
– 40	– 40	310	590	665	1229	1680	3056
– 35	– 31	315	599	670	1238	1700	3092
– 30	– 22	320	608	675	1247	1750	3182
– 25	– 13	325	617	680	1256	1800	3272
– 20	– 4	330	626	685	1265	1850	3362
– 17,8	0	335	635	690	1274	1900	3452
– 15	5	340	644	695	1283	1950	3542
– 10	14	345	653	700	1292	2000	3632
– 5	23	350	662	710	1310	2050	3722
0	32	355	671	720	1328	2100	3812
5	41	360	680	730	1346	2150	3902
10	50	365	689	740	1364	2200	3992
15	59	370	698	750	1382	2250	4082
20	68	375	707	760	1400	2300	4172
25	77	380	716	770	1418	2350	4262
30	86	385	725	780	1436	2400	4352
35	95	390	734	790	1454	2450	4442
40	104	395	743	800	1472	2500	4532
45	113	400	752	810	1490	2550	4622
50	122	405	761	820	1508	2600	4712
55	131	410	770	830	1526	2650	4802
60	140	415	779	840	1544	2700	4892
65	149	420	788	850	1562	2750	4982
70	158	425	797	860	1580	2800	5072
75	167	430	806	870	1598	2850	5162
80	176	435	815	880	1616	2900	5252
85	185	440	824	890	1634	2950	5342
90	194	445	833	900	1652	3000	5432
95	203	450	842	910	1670		
100	212	455	851	920	1688		
105	221	460	860	930	1706		
110	230	465	869	940	1724		
115	239	470	878	950	1742		
120	248	475	887	960	1760		
125	257	480	896	970	1778		
130	266	485	905	980	1796		
135	275	490	914	990	1814		
140	284	495	923	1000	1832		
145	293	500	932	1020	1868		
150	302	505	941	1040	1904		
155	311	510	950	1060	1940		
160	320	515	959	1080	1976		

Pressure/Temperature Table for Saturated Water Steam

bar	°C
1,0	99,1
1,5	110,7
2,0	119,6
2,5	126,7
3,0	132,8
3,5	138,1
4,0	142,9
4,5	147,2
5,0	151,1
5,5	154,7
6,0	158,0
6,5	161,1
7,0	164,1
7,5	167,1
8,0	169,6
8,5	172,2
9,0	174,5
9,5	176,7
10	179,0
11	183,2
12	187,0
13	190,7
14	194,1
15	197,3
16	200,4
17	203,3
18	206,1
19	208,8
20	211,4
22	216,2
24	220,7
26	225,0
28	228,9
30	232,7
35	241,4
40	249,1
45	256,2
50	262,7
55	268,6
60	274,2
65	279,5
70	284,4
75	289,1
80	293,6
85	297,8
90	301,9
95	305,8
100	309,5
105	313,3
110	316,5
115	319,8
120	323,1
125	326,2
130	329,3
135	332,2
140	335,1
145	337,8
150	340,6
155	343,2
160	345,7
165	348,3
170	350,6
175	353,0
180	355,4
185	357,5
190	359,8
195	361,9
200	364,1
205	366,1
210	368,1
215	370,2
220	372,0
225	374,0

Garbagnate Milanese (MI) | Italy

Vapi - Gujarat | India

Limburg an der Lahn | Germany

Suzhou - Jiangsu | China

A Complete International sales network,
covering more than 70 countries across the world.

BONETTI®
Quality Valves & Level Gauges

Cesare Bonetti S.p.A.
20024 Garbagnate Milanese,
Via Cesare Bonetti 17, Italy.

Local Sales: Tel.: +39-02 99072333, Fax : +39-02 99072300
Email : italia@cesare-bonetti.com
Export Sales: Tel.: +39-02 99072444, Fax : +39-02 99072400
Email : export@cesare-bonetti.com
Website : www.cesare-bonetti.com

Cesare Bonetti India Pvt. Ltd.
Survey No. 36, 39 & 42, On N.H. No. 08,
Karambele, Vapi - 396 105 Gujarat - India.
Tel : +91-260-6634000

Sales Office: Tel.: +91-22-27751851
Email : cbindia@cesare-bonetti.com
Website : www.cesare-bonetti.com

Bonetti Armaturen GmbH & Co. KG.
D-65549 Limburg an der Lahn,
In Den Fritzenstucker, 4. Germany.

Sales Office: Tel.: +49-06431 598310, Fax : +49-06431 598329
Email : armaturen@bonetti.de
Website : www.bonetti.de

Cesare Bonetti (Suzhou) Level Gauges & Valves Co. Ltd.
No. 8, Lane 1, Wupu Road, Shengpu District,
Suzhou Industrial Park, Jiangsu, China - 215 126.

Sales Office: Tel.: +86-512-62816396, Fax : +86-512-62816393
Email : bonettisuzhou@cesare-bonetti.cn
Website : www.cesare-bonetti.cn

Copyright © Cesare Bonetti. All rights reserved.
Unless otherwise indicated, all materials on these pages are copyrighted by Cesare Bonetti S.p.A. All rights reserved. Any reproduction, modification, storage in a retrieval system or retransmission, in any form or by any means, electronic, mechanical or otherwise is strictly prohibited.

Publication CB-PC-17- Rev.00

uandvcreativess.com